Species Conservation Assessment and Conservation Strategy for the Townsend's Big-Eared Bat

IDAHO CONSERVATION EFFORT 1999

IDAHO CONSERVATION EFFORT

The Idaho Conservation Effort (ICE) was initiated in late 1993 as an interagency species conservation program to develop proactive conservation strategies for species at risk of being listed as threatened or endangered under the Endangered Species Act (ESA) of 1973, as amended. The primary objectives of ICE are to: (1) identify and implement early conservation measures to reduce, eliminate, or mitigate those factors considered to be limiting the species' well being, (2) stabilize and recover the species and their habitats to preclude listing as "endangered" or "threatened" under the ESA, (3) recover populations of species that are listed to facilitate their removal from the list, and (4) encourage private landowners to voluntarily manage their land holdings for species of concern or to maintain or enhance habitat for those species.

An emphasis on early conservation efforts for species at risk allows opportunities for state and federal agencies and other interested parties to stabilize and recover these species and their ecosystems before listing becomes a high priority. Addressing the conservation needs of at risk species maintains management flexibility, reduces potential conflict and restrictive land use policies, avoids the confrontational atmosphere often associated with listing, and provides an ecologically sound and cost-effective means to conserve species. The parties currently signatory to the 1998 ICE Memorandum of Understanding are: Idaho Department of Fish and Game, Idaho Department of Parks and Recreation, U.S. Fish and Wildlife Service, Bureau of Land Management, U.S. Forest Service Regions 1 and 4, Natural Resources Conservation Service, Boise Cascade Corporation, Potlatch Corporation, and The Nature Conservancy.

The Species Conservation Assessment for the Townsend's big eared bat (*Corynorhinus townsendii townsendii* and *Corynorhinus townsendii pallescens*) summarizes life history and habitat requirements, historical and current distribution and abundance throughout its range, current status, and identifies threats to the species' existence. The Conservation Strategy is a plan that will remove or minimize identified threats and promote restoration or recovery of the species.

This report should be cited as:

Pierson, E. D., M. C. Wackenhut, J. S. Altenbach, P. Bradley, P. Call, D. L. Genter, C. E. Harris, B. L. Keller, B. Lengus, L. Lewis, B. Luce, K. W. Navo, J. M. Perkins, S. Smith, and L. Welch. 1999. Species conservation assessment and strategy for Townsend's big-eared bat (*Corynorhinus townsendii townsendii* and *Corynorhinus townsendii pallescens*). Idaho Conservation Effort, Idaho Department of Fish and Game, Boise, Idaho.

Townsend's big-eared bat cover illustration courtesy of Nancy Russell.

Copies of this report can be ordered by contacting: Charles E. Harris, Idaho Department of Fish and Game, P.O. Box 25, Boise, ID 83707-0025; 208/334-2920; charris@idfg.idaho.gov

TABLE OF CONTENTS

PREFACE i
ACKNOWLEDGMENTS i
SPECIES CONSERVATION ASSESSMENT 1
INTRODUCTION 1
SPECIES INVOLVED 1
TAXONOMY/SYSTEMATICS 1
DESCRIPTION 1
LIFE HISTORY 2
- Habitat Associations 2
- Roosting Ecology 2
  - Maternity Roosts 4
  - Hibernacula 4
  - Summer Roosts of Males and Non-Reproductive Females 5
  - Night Roosts 6
  - Interim Roosts 6
- Foraging Behavior and Habitat 6
- Diet 7
- Reproduction and Development 7

GEOGRAPHIC DISTRIBUTION AND STATUS 8
- Arizona 10
- British Columbia 11
- California 11
- Colorado 12
- Idaho 13
- Kansas 15
- Montana 15
- Nebraska 16
- Nevada 16
- New Mexico 17
- North Dakota 18
- Oklahoma 18
- Oregon 18
- South Dakota 19
- Texas 19
- Utah 20
- Washington 20
- Wyoming 21

THREATS 21
- Summary of Threats 21
- Anthropogenic Threats 22
  - Abandoned Mine Closures 22
  - Recreational Caving 22
  - Renewed Mining at Historical Sites 23
  - Toxic Material Impoundments 23
  - Pesticide Spraying 24
  - Vegetative Conversion 24
  - Livestock Grazing 25
  - Timber Harvest 25

Inventory, Monitoring, and Scientific Research 25
Eradication 26
State Status 26
Natural Threats 26
Behavioral Ecology 26
Population Ecology 27
Habitat Threats 27
Predation 27
LITERATURE CITED 27

CONSERVATION STRATEGY 37
INTRODUCTION 37
GOAL 37
STANDARDS 37
Management of Abandoned Mines 37
Management of Caves 37
Renewed Mining at Historical Mine Sites 38
Toxic Material Impoundments 38
Pesticide Spraying 38
Vegetative Conversions 39
Timber Harvest 39
Inventory, Monitoring, and Research Protocols 40
INVENTORY AND MONITORING 41
Inventory 41
Monitoring 41
State Status 41
Ecological Research 41
APPENDIX A: Evaluation of Bat Use in Abandoned Mines 43
APPENDIX B: Designs for Bat Gates 52
APPENDIX C: Guidelines for the Protection of Bat Roosts 63

PREFACE

In October 1994, development of this Townsend's big-eared bat conservation strategy was initiated as part of the Idaho Conservation Effort: Idaho recognized that independent conservation attempts within the state would not necessarily prevent the listing of a species with a range extending throughout much of the West. As a result, individuals from 8 states who had a knowledge of and/or commitment to the conservation of this bat were invited to participate in preparing the strategy. This team represented both a geographic and administrative cross-section of the region, consisting of individuals from state agencies, federal agencies, educational institutions, and independent bat biologists.

A final draft of the document was published and released for comment during the spring of 1996. In the fall of 1996, a team meeting was held to incorporate reviewer's comments into the final conservation strategy. During this meeting the Western Bat Working Group was formed, in part to address the need for periodically updating and monitoring the progress of this conservation strategy. Although the role of this group has greatly-expanded, it remained instrumental in facilitating the completion of this document.

Many administrative units of state and federal agencies used the draft conservation strategy as a means to implement actions to conserve this species. These efforts are commended. The refinements incorporated into this final document should ensure even more effective conservation of the species. The more groups, agencies, and private entities adopt and implement this strategy, the greater the likelihood that a listing as Threatened or Endangered can be averted. Implementation of this conservation strategy will also have the added benefit of conserving other cave and mine dwelling bats.

No conservation strategy is ever truly "final". The goal of the Idaho Conservation Effort and Western Bat Working Group is to continue to refine this strategy as new information warrants its modification.

ACKNOWLEDGMENTS

An effort-of this magnitude can only be accomplished by the collective efforts of a number of individuals and agencies. The Idaho Conservation Effort leadership provided by Martha Hahn, Idaho BLM State Director and Cathy Barbouletos, former Deputy Supervisor of the Boise National Forest (currently Flathead National Forest Supervisor), was integral to completion of the document. Regions 1 and 4 of the U.S. Forest Service provided the funding necessary to complete the conservation strategy. The Washington Office of the BLM provided funding for publication. A number of state and federal agencies and educational institutions in the West showed foresight by allowing participation and representation on the team by their staff. These included:

Bureau of Land Management
U.S. Forest Service
Idaho Department of Fish and Game
Colorado Division of Wildlife
Montana Natural Heritage Program
Nevada Division of Wildlife
Wyoming Game and Fish
Idaho State University
University of New Mexico
Utah State University

The Co-Team Leaders, Elizabeth Pierson and Martha Wackenhut, provided much of the leadership, dedication, and expertise needed to bring this document to fruition. Team members included:

Scott Altenbach[1], University of New Mexico
Lew Becker, U.S. Forest Service, Region 6
Pete Bradley[1], Nevada Division of Wildlife
Paula Call[1], Idaho Bureau of Land Management
Dave Genter[1], Montana Natural Heritage Program
Donna Howell, U.S. Forest Service, Region 6
Barry Keller[1], Idaho State University
Brad Lengus[1], Utah State University
Bob Luce[1], Wyoming Game and Fish
Kirk Navo[1], Colorado Division of Wildlife
Mark Perkins[1], Independent Bat Biologist, Salt Lake City, Utah
Elizabeth Pierson[1], Independent Bat Biologist, Berkeley, California
Don Sasse, U.S. Forest Service, Region 1
Rick Sherwin, University of New Mexico
Sheri Smith[1], U.S. Forest Service, Region 5
Martha Wackenhut[1], Idaho Department of Fish and Game
Leslie Weich[1], U.S. Forest Service, Region 4

Lyle Lewis[1], Idaho Bureau of Land Management and Idaho Conservation Effort Technical Committee Representative
Charles Harris[1], Idaho Department of Fish and Game and Idaho Conservation Effort Technical Committee Representative

[1]Original Team Member

SPECIES CONSERVATION ASSESSMENT FOR TOWSENDS'S BIG-EARED BAT (*Corynorhinus townsendii townsendii and Corynorhinus townsendii pallescens*)

INTRODUCTION

Two subspecies of Townsend's big-eared bat, *Corynorhinus townsendii townsendii* and *Corynorhinus townsendii pallescens*, both found in Idaho, are listed as Species of Special Concern by the Idaho Department of Fish and Game (IDFG), Species of Concern (formerly Category II [C2]) by the U.S. Fish and Wildlife Service (FWS), and Sensitive Species by the Bureau of Land Management (BLM) and U.S. Forest Service regions 1 and 4 (USFS). This Conservation Strategy applies to the range of *C. townsendii* within the state of Idaho, but can be applied to the species throughout its range in the western United States. The purpose of this strategy is to reduce the threats to the species throughout its range in Idaho. If this strategy is successful the likelihood *C. townsendii* will require protection under the Endangered Species Act will be reduced. The Conservation Strategy is intended to prevent declines of *C. townsendii* populations in Idaho and the western U. S., and to protect the species' habitats.

SPECIES INVOLVED

Townsend's big-eared bat (*Corynorhinus townsendii townsendii* and *Corynorhinus townsendii pallescens*)

TAXONOMY/SYSTEMATICS

In this document we recognize the recently proposed change in the generic name for Townsend's big-eared bat from *Plecotus* to *Corynorhinus*. Throughout most of its taxonomic history, the accepted generic name was *Corynorhinus* (reviewed in Handley 1959). In 1959, Handley subsumed 3 formerly recognized genera as subgenera under the generic name of *Plecotus*: (1) the Palearctic taxa previously known as *Plecotus*, (2) the North American taxa previously known as *Corynorhinus*, and (3) the monotypic western North American lineage now known as *Idionycteris*.

Idionycteris was subsequently re-evaluated and restored to generic status (Williams et a1. 1970), a change that has been generally accepted (e.g., Koopman 1993). More recently, 2 phylogenetic studies have reviewed relationships among plecotine genera (Frost and Timm 1992, Tumlison and Douglas 1992). They derive significantly different relationships among the genera and differ in some taxonomic recommendations, but are consistent in recognizing *Corynorhinus* (=North American *Plecotus*) as distinct at the generic level from Palearctic *Plecotus*. Although the latest revision of mammalian nomenclature (Koopman 1993) does not recognize this change, the papers by Frost and Timm (1992) and Tumlison and Douglas (1992) post-date the closing publication date for Koopman (1993). K. Koopman (in litt.) has agreed *Corynorhinus* should be recognized as a separate genus.

Handley (1959) recognized 5 subspecies of *C. townsendii* in the United States, 2 (*C. t. townsendii and C. t. pallescens*) in the western U.S., and 2 (*C. t. ingens and C. t. virginianus*) in the eastern U.S., and 1 (*C. t. australis*) with a primarily Mexican distribution, that overlaps with *C. t. pallescens* in western Texas. This document is concerned primarily with the 2 western subspecies.

DESCRIPTION

C. townsendii can be distinguished from all other western bat species by the combination of a 2-pronged,

horseshoe-shaped lump on the nostrils, and large, rabbit-like ears. Although there are other western species with long ears (e.g., pallid bat [*Antrozous pallidus*], spotted bat [*Euderma maculatum*], Allen's big-eared bat [*Idionycteris phyllotis*], California leaf-nosed bat [*Macrotus californicus*], and long-eared myotis [*Myotis evotis*]), none of these have the 2-pronged nose lump, and most can be distinguished by other features (Pierson et al. 1991). The species that is most similar, *I. phyllotis*, has unspecialized nostrils and a pair of fleshy lappets projecting from the ears over the forehead (Barbour and Davis 1969). It does not occur in Idaho.

Although the ears on *C. townsendii* are obvious (erect and facing forward) when animals are alert, they can be difficult to see (curled tightly against the top of the head in the shape of a ram's horn) when animals are in torpor or hibernation. At such times, the tragus (a prominence on the frontal, external opening to the ear that is enlarged in many microchiropteran species), remains erect and can be mistaken for ears, leading to misidentification of the species.

C. townsendii is a medium sized (10-12 g) bat, with an adult forearm of 39-48 mm and ears of 30-39 mm. It shows some regional variation in color, but generally has buffy brown dorsal fur with somewhat paler underparts (Barbour and Davis 1969, Kunz and Martin 1982).

LIFE HISTORY

Habitat Associations

Although *C. townsendii* occurs in a wide variety of habitats, its distribution tends to be geomorphically determined and is strongly correlated with the availability of caves or cave-like roosting habitat (e.g., old mines). Population concentrations occur in areas with substantial surface exposures of cavity-forming rock (e.g., limestone, sandstone, gypsum, or volcanic), and in old mining districts (Graham 1966, Humphrey and Kunz 1976, Kunz and Martin 1982, Genter 1986, Perkins et al. 1994, Dobkin et al. 1995, Pierson and Rainey 1996, Ports and Bradley 1996). In Idaho, the largest known populations are associated with lava flows in the southwestern part of the state (Genter 1986, Wackenhut 1990).

C. townsendii has been found from sea level along the Pacific coast (Dalquest 1947, Pearson et al. 1952, Perkins 1983, Pierson and Rainey 1996) to 2,400 m in the mountains of New Mexico (Jones 1965, Jones and Suttkus 1972), 2,900 m in Colorado (Findley and Negus 1953), and 3,188 m in the White Mountains of California (Szewczak et al. 1998). It appears to be absent only from the most extreme deserts (Handley 1959) and possibly the highest elevations. It occurs in a variety of xeric to mesic habitats, including desert scrub, sagebrush, chaparral, deciduous and coniferous forests (including, but not limited to, piñon-juniper, ponderosa pine, spruce-fir, redwood, mixed hardwood-conifer, and oak woodlands) (Dalquest 1947, Handley 1959, Jones 1965, Easterla 1973*a*, Schmidly et al. 1977, Kunz and Martin 1982, Dobkin et al. 1995, Ports and Bradley 1996, Pierson and Fellers 1998, Sherwin et al. In press).

Roosting Ecology

C. townsendii is primarily a cave dwelling species that also roosts in man-made cave analogues, especially old mine workings. In some areas, particularly along the Pacific coast, it has been found in old, mostly abandoned, buildings with cave-like attics and other man-made structures (e.g., water diversion tunnels and bridges) (Dalquest 1947, Pearson et al. 1952, Barbour and Davis 1969, Kunz and Martin 1982, Perkins and Levesque 1987, Dobkin et al. 1995, Perlmeter 1996, Pierson and Rainey 1996, Ports and Bradley 1996, Szewczak et al. 1998, Sherwin et al. In press).

C. townsendii is a relatively sedentary species for which no long-distance migrations have been reported (Pearson et a1. 1952, Barbour and Davis 1969, Humphrey and Kunz 1976). The longest seasonal movements known for this species are 32.2 km in California (Pearson et al. 1952), 39.7 km in Kansas (Humphrey and Kunz 1976), and 64.4 km in West Virginia and Kentucky (Barbour and Davis 1969).

Humphrey and Kunz (1976) observed a high degree of site fidelity for this species, noting that greater than 80% of the bats remained at or returned to the same banding site in subsequent winters. Pearson et al. (1952) recorded similar observations of roost site fidelity, noting that 73-77% of the adult females returned to the same maternity roost each year. It also appears, however, that a number of colonies use multiple roosts. They may shift roosts as the season progresses, either to different localities within one structure or to different structures. This behavior appears, in most cases, to be temperature driven with the bats using cooler sites before the young are born and moving to warmer sites after the young are born (D. Dalton, Tucson, Arizona, personal communication; V. Dalton, Pima Community College, personal communication; Pierson et al. 1991; Clark et al. 1996). A number of colonies are also known to have alternate roosts (P. Brown, Brown-Berry Biological, personal communication; D. Dalton, Tucson, Arizona, personal communication; V. Dalton, Pima Community College, personal communication; Pearson et al. 1952; Perkins and Levesque 1987; Pierson and Rainey 1996). Movements to alternate roosts are often in response to disturbance, but may occur for other reasons not currently understood. When seeking to protect an important maternity colony, roosting patterns should be investigated, and all sites used within the maternity season should be protected.

C. townsendii is a colonial species with relatively restrictive roost requirements (Humphrey and Kunz 1976, Perkins 1990*a*, Perkins and Levesque 1987, Pierson et al. 1991, Perkins et al. 1994). Unlike many species that seek refuge in crevices, *C. townsendii* forms highly visible clusters on open surfaces (e.g., domed areas of caves, or ceilings of old barns) (Handley 1959, Barbour and Davis 1969), making them extremely vulnerable to disturbance.

The seasonal and daily roosting patterns of *C. townsendii* follow those observed for many other temperate zone bat species. The most significant roosts (i.e., those having the largest aggregations and those most critical to the survival of populations) are the winter hibernacula (both sexes) and the summer maternity roosts (entirely adult females and their young). Additionally, there are other summer roosts: those used in the day time by males and non-reproductive females (usually containing no more than a few animals per roost), night roosts (generally at a different site than the day roost) used by both sexes as a place to rest and digest food during the night, and interim roosts (sites used in the spring before the young are born and in the fall before moving to hibernating sites) (Pearson et al. 1952, Handley 1959, Barbour and Davis 1969).

C. townsendii does not generally associate with other species in its roosts, particularly at maternity and hibernating sites. Although a few individuals of other species may be present, they are not generally found in direct contact with *C. townsendii*, and most typically are in different areas of the structure (Handley 1959).

Maternity Roosts.--*C. townsendii* maternity roosts in the eastern U.S. occur exclusively in caves (Handley 1959, Barbour and Davis 1969, Tipton 1983, Clark et al. 1993, Lacki et al. 1994), while those in the west are found in caves (Graham 1966, Humphrey and Kunz 1976, Keller and Saathoff 1995, Dobkin et al. 1995), and a variety of human-made structures such as mines and old buildings (Howell 1920, Pearson et aI.J952, Pierson 1989, Pierson et al. 1991; Szewczak et al. 1998, Sherwin et al. In press, Pierson and Fellers 1998). In California, of the 54 maternity sites known in 1996, 42% were in caves, 39% in mines, 15% in buildings, and 4% in other man-made structures (Pierson and Rainey 1996). The only known colonies along the California coast are in human-made structures.

Maternity colonies appear to vary in size regionally. The colonies studied by Humphrey and Kunz (1976) in Kansas and Oklahoma were small, ranging from 17 to 40 adult females. No colonies larger than about 80 females have been found in Colorado (K. Navo, Colorado Division of Wildlife, personal communication). Much larger colonies are known from Arizona, New Mexico, California, and Oregon (S. Altenbach, University of New Mexico, personal communication; Pearson et al. 1952; Dalton and Dalton 1994, Peterson and Perkins 1994). The largest known colony in California has about 400 females, with mean colony size statewide of 112 (a 32% decline from an historical mean of 164) (Pierson et al. 1991, Pierson and Rainey 1996). One colony in Oregon has been documented at 435 females (Perkins 1991). Colonies of the eastern subspecies are generally larger, numbering 300-1,000 (Hall 1963, Rippy and Harvey 1965, Stihler and Hall 1993).

Studies conducted in Oregon (Perkins and Levesque 1987, Perkins et al. 1994) and California (Pierson et al. 1991), based on surveys of >1,300 caves and mines, have identified several factors important to *C. townsendii* in selection of maternity sites, including roost temperature, roost dimensions, light quality, and air flow. Roost temperature appears to be critical (Pearson et al. 1952, Lacki et al. 1994, Pierson and Rainey 1996). Colonies generally form tight clusters to help maintain high body temperatures and promote the sharing of body heat during pregnancy and lactation (Humphrey and Kunz 1976). Recorded temperatures in maternity roosts throughout California vary between 19°C in the cooler regions to 30°C in the warmer southern regions (Pierson et al. 1991). Colonies also sometimes change roost sites (either different areas of the same roost, or different roosts) during the maternity season, seeking cooler places during early pregnancy and warmer sites in later pregnancy and once the young are born (Tipton 1984, Pierson et al. 1991).

C. townsendii also requires a relatively spacious roost. The majority of the roosts examined in California (Pierson et al. 1991) are at least 30 m in length, with the roosting area located at least 2 m above the ground. Maternity clusters are often located in ceiling pockets or along the walls just inside the roost entrance, within the twilight zone.

Bat species that have been observed roosting in the same caves/structures with *C. townsendii* maternity colonies include *Macrotus californicus*, *Myotis Ciliolabrum*, *M. lucifugus*, *M. thysanodes*, *M. velifer*, *Tadarida brasiliensis* (B. Luce, Wyoming Game and Fish, personal communication; Cahalante 1939; Stager 1939; Pearson et al. 1952; Twente 1955; Peterson and Perkins 1994).

Hibernacula.--Hibernating *C. townsendii* individuals have been found mainly in caves and mines (Pearson et al. 1952, Barbour and Davis 1969, Humphrey and Kunz 1976, Genter 1986, Wackenhut 1990, Bosworth 1994, Perkins et al. 1994, Doering 1996, Pierson and Rainey 1996, Pierson and Fellers 1998, Szewczak et al. 1998, Shasta Area Grotto, personal communication) and occasionally in buildings (Dalquest 1947, G. M. Fellers, Point Reyes National Seashore, personal communication). Recent work by S. Altenbach (University of New Mexico, personal communication) in New Mexico has demonstrated the importance of deep mine shafts as hibernating sites for this and other bat species. Populations are known

in lava-tube caves in Idaho (Genter 1986, Wackenhut 1990, Bosworth 1994, Keller and Saathoff 1995, Doering 1996) and California (C. Barat, Lava Beds National Monument, personal communication).

Winter roosting behavior for hibernating *C. townsendii* varies throughout its distribution. Suitable caves in the eastern U.S. seem to be limited, and hibernating aggregations number as high as 1,000-6,000 (Rippy and Harvey 1965, Stihler and Hall 1993). Large aggregations have also been found in colder areas of the western U.S., e.g., 460 in a cave in northern California (Pierson and Rainey 1996), 1,000 in a cave in South Dakota (M. Bogan, U.S. Fish and Wildlife Service personal communication), >300 at 2 sites in Oregon (Perkins 1990*b*), 400 in a lave-tube cave in southern Idaho (Wackenhut 1990), and several thousand in a mine shaft in New Mexico (S. Altenbach, University of New Mexico, personal communication). More typically, however, especially in the West, *C. townsendii* tends to form relatively small hibernating aggregations of a few to several dozen individuals (Barbour and Davis 1969, Humphrey and Kunz 1976, Kunz and Martin 1982, Wackenhut 1990, Pierson et al. 1991). In California the larger aggregations are generally confined to areas that experience prolonged periods of freezing temperatures (Pierson and Rainey 1996).

Studies in the western U.S. have shown that *C. townsendii* selects roosts with stable, cold temperatures and moderate airflow (Humphrey and Kunz 1276, Kunz and Martin 1982). Individuals roost on walls or ceilings, often near entrances (Humphrey and Kunz 1976, Twente 1955). If undisturbed, individuals will frequently roost <3 m off the ground (Perkins et al. 1994), and have been found in air pockets under boulders on cave floors (E. D. Pierson, Berkeley, California, personal communication). Temperature appears to be a limiting factor in roost selection (Genter 1986). Recorded temperatures in *C. townsendii* hibernacula range from -2.0-13.0°C (Pearson et al. 1952, Twente 1955, Humphrey and Kunz 1976, Genter 1986, Pierson et al. 1991, Doering 1996), with temperatures below 10°C being preferred (Perkins et al. 1994, Pierson and Rainey 1996). Individuals appear to be sensitive to changes in temperature and humidity. In the warmer regions of California, individuals arouse more often from a state of hibernation and are thought to feed on warm nights, sometimes appearing in night roosts in buildings (Pearson et al. 1952, Pierson et al. 1991).

In general, *C. townsendii* individuals begin to arrive at hibernacula in October and reach maximum numbers in January. In early winter, individuals may hibernate near entrances, relying on the cool substrate to maintain stable body temperatures. If temperatures at entrances drop below freezing, bats may arouse and move into the deeper, more stable parts of caves and mines (Kunz and Martin 1982). In Oklahoma and Kansas, females outnumbered males until January, at which time the sex ratio became 1:1. Males chose warmer sites than females; weight loss during the hibernation period was roughly 55% for females and 57% for males (Humphrey and Kunz 1976).

Bat species known to occur within *C. townsendii* hibernacula include *Antrozous pallidus*, *Eptesicus fuscus*, *Myotis californicus*, *M. ciliolabrum*, *M. evotis*, *M. sodalis*, *M. thysanodes*, *M. velifer*, *M. volans*, *Pipistrellus subflavus*, and *C. rafinesquii* (Dalquest 1947, Pearson et al. 1952, Twente 1955, Handley 1959, Rippy and Harvey 1965, Kunz and Martin 1982, Marcot 1984, Genter 1986, Perkins and Levesque 1987).

Summer Roosts of Males and Non-Reproductive Females.--Summer roosts that are not maternity roosts are typically comprised of males and non-reproductive females (Pearson et al. 1952, Barbour and Davis 1969, Humphrey and Kunz 1976). Most commonly these roosts contain 1 to several individuals, although a summer colony of >1,000 males has been reported in Kentucky (Lacki et al. 1994).

These roosts include caves (Dalquest 1947, Pearson et al. 1952, Humphrey and Kunz 1976), buildings (Dalquest 1947, Findley and Negus 1953, Barbour and Davis 1969, Senger et al. 1972), shallow prospect

holes (Hardy 1941), bridges (Pierson and Rainey 1993), the passages between fallen boulders on a cave floor (Commissaris 1961), and abandoned mines (Whitlow and Hall 1933, Pearson et al. 1952, Humphrey and Kunz 1976). G. Fellers (unpublished observation) radio-tracked 2 reproductive females to the cavities of a coast redwood (*Sequoia sempervirens*) and a California bay laurel (*Umbellularia californica*) where they remained for 2 days before returning to their maternity colony. This is the first such observation of *C. townsendii* roosting in trees and it raises the possibility that this typically cavern-dwelling species may make use of large hollows in mature trees and snags.

Bat species that are associated with *C. townsendii* in non-maternity summer roosts include *Antrozous pallidus*, *Idionycteris phyllotis*, *Myotis californicus*, *M. evotis*, *M. lucifugus*, *M. thysanodes*, *M. volans*, *M. yumanensis*, *Macrotus californicus*, and *Tadarida brasiliensis* (Dalquest 1947, Pearson et al. 1952, Commissaris 1961, Dyck and Perkins 1984).

Night Roosts.--*C. townsendii* do not form large night roosting aggregations as do some other species (e.g., some *Myotis* species), but rather appear in small numbers in a variety of sites, including caves (Dalquest 1947, Graham 1966), open buildings (Dalquest 1947, Rainey and Pierson 1996), rock shelters (Lacki et al. 1993), bridges (Perkins and Levesque 1987, Perimeter 1996), cement culverts, beneath roads (Hall 1994), and mines (Keller 1994). Lacki et al. (1993) used categorical data analyses to determine that *C. t. virginianus* selects night roosts that have large entrances and deep passages.

Bat species known to occur with *C. townsendii* in its night roosts include *Antrozous pallidus*, *Eptesicus fuscus*, *Myotis californicus*, *M. ciliolabrum*, *M. evotis*, *M. lucifugus*, *M. thysanodes*, *M. volans*, and *M. yumanensis*, (Dalquest 1947, Pearson et al. 1952, Easterla 1966, Perimeter 1996).

Interim Roosts.--*C. townsendii* has occasionally been found aggregated in roosts (e.g., caves and mines) very early in the spring and in the fall at sites close to, but not the same as, those used as maternity roosts (E. D. Pierson unpublished data, Dalton and Dalton 1994, Clark and Clark 1997). Perkins (1990*a*) presents evidence that some spring aggregations are pregnant females using specific sites as "staging" roosts for colony formation prior to parturition. Autumn roosts have been shown to be important mating sites for other species (Humphrey and Cope 1976, Berry and Brown 1995).

Foraging Behavior and Habitat

C. townsendii is a late flyer, emerging from the roost primarily after dark (Barbour and Davis 1969, Jones 1965, Bell 1980, Tipton 1983), an average of 45.5 minutes after sunset (Clark et al. 1993). A netting study by Cockrum and Cross (1964) suggested 2 peaks of activity during the night. A radio-tracking study by Clark et al. (1993) showed that during lactation females returned to the nursery roost up to 3 times per night, but after lactation remained away from the roost all night. Remote monitoring of activity at a nursery roost entrance in California offered similar data, with a bimodal concentration of activity prior to parturition, and nearly continuous activity through the night after the young were born (Pierson et al. 1991).

Recent radio-tracking and light-tagging studies have found *C. iownsendii* foraging in a variety of habitats. In Oklahoma, *C. t. ingens* preferred edge habitats (along intermittent streams) and open areas (pastures, crops, native grass) near wooded habitat (Clark et aI1993). Light-tagging studies in West Virginia (V. Dalton, Pima Community College, personal communication) showed a bimodal foraging pattern for *C. t. virginianus*, with animals foraging over hayfields during the first part of the night and within the forest later in the night, traveling up to 13 km from the day roost. Burford and Lacki (1995) showed this subspecies foraging over old fields. Brown et al. (1994) showed that *C. townsendii* on Santa Cruz Island in California avoided the lush introduced vegetation near their day roost, and traveled up to 5 km to feed

in native oak (*Quercus* spp.) and ironwood (*Olneya tesota*) forest. Radio-tracking studies in northern California have found *C. townsendii* foraging within forested habitat, and along heavily vegetated stream corridors, avoiding open, grazed pasture land (Rainey and Pierson 1996, Pierson and Fellers 1998, Fellers and Pierson In prep).

C. townsendii is a slow-flying (2.9-5.5 m/sec), highly maneuverable bat (Hayward and Davis 1964, Findley et al. 1972) that has been observed gleaning insects from vegetation (Howell 1920) and foraging within tree canopies (E. D. Pierson, Berkeley, California, personal communication). The extent to which it forages by gleaning is not known. Griffin (1958) determined this species has the ability to echolocate through the nose, allowing it to feed in flight while maintaining full use of its auditory capabilities. It is adept at detecting and avoiding obstacles (Griffin 1958, Griffin et al. 1963), including mist nets (Ross 1967, Barbour and Davis 1969).

Diet

C. townsendii is a lepidopteran specialist, with a-diet consisting of >90% moths (Ross 1967; Whitaker et al. 1977, 1981; Dalton et al. 1986, 1989; Sample and Whitmore 1993; Burford and Lacki 1998). Ross (1967) examined the stomachs of 40 *C. townsendii*, 38 of which contained only lepidopterans, averaging 6-12 mm in length. Dalton et al. (1986) examined 1,222 *C. t. virginianus* fecal pellets and found the percent volume of the diet to be 97.1% Lepidoptera. Shoemaker and Lacki (1993) determined that *C. t. virginianus* differentially selected noctuid moths. Noctuidae represented only 12.2% of the available moth prey items, but 62.6% of the moths consumed. Moths in the families Geometridae, Notodontidae, and Sphingidae also made up a significant portion of the diet. Representatives of the family Arctiidae made up 37.5% of the available moth prey items, but were not consumed. Sample and Whitmore (1993) identified moth species from wing fragments collected at maternity caves. Of the 28 moth taxa identified, 15 were noctuids. Twenty-one species were forest associated and 6 associated with open-field habitats.

In addition to lepidopterans, small quantities of other insects have been detected in studies of *C. townsendii*'s diet, particularly Coleoptera and Diptera (Ross 1967, Dalton et al. 1986, Sample and Whitmore 1993). Hemiptera, Hymenoptera, Homoptera, Neuroptera, Trichoptera, and Plecoptera have also been found sporadically (Whitaker et al. 1977, Dalton et al. 1986).

Reproduction and Development

Pearson et al. (1952) studied the reproduction of this species in California, providing most of what we know of its reproductive patterns. Mating takes place in the hibernaculum from October to February, although some females may be inseminated prior to their arrival at the hibernaculum. Copulation is preceded by ritualized courtship behavior. The male emits twittering sounds while approaching the female, then rubs his snout over the face, neck, forearms, and ventral part of the female's body. Males have been known to copulate with hibernating females, who may breed as early as 4-months of age. The sex organs of males do not mature until the second year of life, consequently males are not reproductively active their first year. No vaginal plug forms in the female, so it follows that each female may be mated with different males several times during the winter months. The female stores sperm in the uterine lining until spring when ovulation and fertilization occur. Gestation length varies with climatic conditions, but generally lasts from 56-100 days.

Maternity colonies generally begin to form in March or April, although the timing varies with latitude. For example, colonies begin to form in March in central coastal California but not until June in interior northern California (G. Fellers, Point Reyes National Seashore, personal communication; E. D. Pierson, Berkeley, California, personal communication). A single young is born sometime between May and July

(Easterla 1973*b*, Pearson et al. 1952, Twente 1955). Natality has been documented at 90-100% (Kunz and Martin 1982). *C. townsendii* pups average 2.4 g at birth, nearly 25% of the mother's postpartum mass. Young bats are capable of flight at 2.5-3 weeks of age and are fully weaned at 6 weeks (Pearson et a1. 1952).

Nursery colonies start to disperse in August about the time the young are weaned and break up altogether in September and October (Pearson et al. 1952, Tipton 1983). Adult females that have lost their young depart earlier than lactating females. Young males tend to leave earlier than young females (Barbour and Davis 1969).

Pearson et a1. (1952) estimated year to year survivorship at about 50% for young and about 80% for adults. Band recoveries have yielded longevity records of 16 years 5 months (Paradiso and Greenhall 1967) and 21 years 2 months (Perkins 1994).

GEOGRAPHIC DISTRIBUTION AND STATUS

C. townsendii occurs throughout much of western North America, from British Columbia to Mexico, and eastward to Texas, with isolated populations in Kansas, Arkansas, Missouri, Oklahoma, Kentucky, West Virginia, and Virginia. The 2 eastern subspecies, which are not specifically considered in this document, are listed as endangered under the Federal Endangered Species Act. *C. t. ingens* is confined to a small area at the junction of Oklahoma, Arkansas and Kansas; *C. t. virginianus* is known from Virginia, West Virginia, and Kentucky. Recovery plans have been prepared for both these subspecies (Hensley and Scott 1993, Tolin 1994).

The 2 western subspecies; *C. t. townsendii* and *C. t. pallescens*, which are the focus of this document, are both currently recognized as Species of Concern (formerly Category II [C2]) by the FWS, Sensitive or Species of Concern by BLM and USFS in most areas, and a special status species by most western state's wildlife management agencies. It also was ranked as a species of highest priority for funding, planning, and conservation efforts by the Western Bat Working Group (Western Bat Working Group 1998). *C. t. townsendii* occurs in Washington, Oregon, California, Nevada, Idaho, and possibly southwestern Montana and northwestern Utah; *C. t. pallescens* occurs in all the same states as *C. t. townsendii*, plus Arizona, Colorado, New Mexico, Texas, and Wyoming (Handley 1959).

Throughout much of their range in California, Idaho, Nevada, Oregon, and Washington there are extensive zones of intergradation for the 2 subspecies (Fig. 1). There has been considerable confusion among resource management agency personnel throughout the West regarding where the subspecies currently occur. This issue is confounded by the problem that throughout the zone of intergradation it is frequently impossible to assign individuals to one subspecies or the other. Although Handley (1959) makes the distinction between the 2 subspecies based on size and color characteristics, he also claims that one can observe a full spectrum of characteristics for both subspecies within a single population. Microsatellite loci have been used to examine genetic variation between populations of the European *Plecotus auritus* (Burland et a1. 1998). Preliminary genetic studies, using mitochondrial DNA and microsatellites for 3 western U.S. populations of *C. townsendii* (2 within the zone of intergradation between *C. t. townsendii* and *C. t. pallescens*; and 1 population from the range of *C. t. pallescens*), have suggested that these techniques could be used to assess genetic differentiation among populations (Pierson and Fellers 1998; T. Burland, Queen Mary and Westfield College, personal communication). For the purposes of this document, however, we make no distinction between these subspecies.

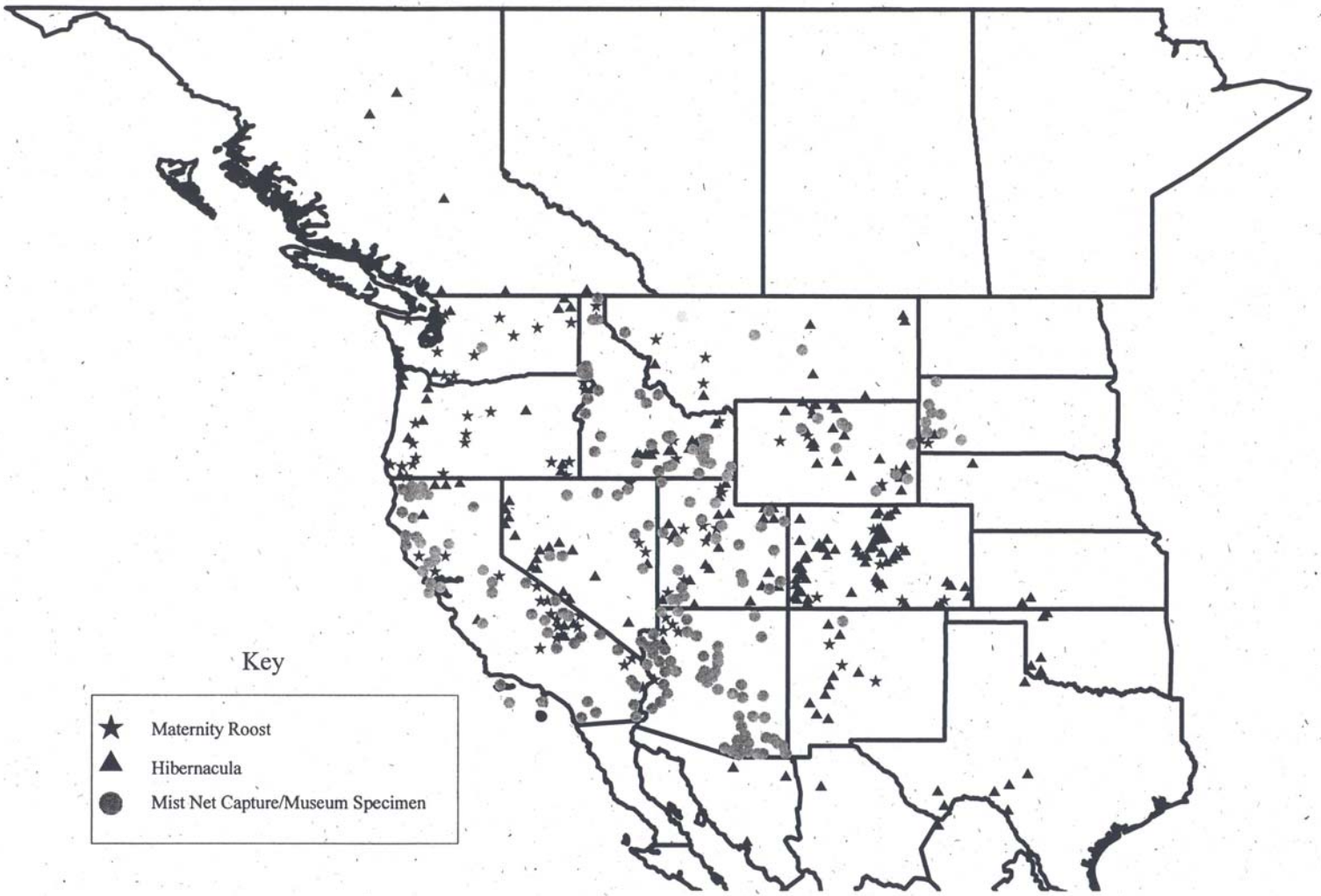

Fig. 1. Known distribution of *Corynorhinus townsendii pallescens* and *Corynorhinus townsendii townsendii* for the western United States.

Arizona

According to Handley (1959), all populations in Arizona would be *C. t. pallescens*.

C. t. pallescens is currently on the Arizona Game and Fish Department's draft Wildlife of Special Concern list (Tim Snow, Arizona Game and Fish, personal communication). Arizona Game and Fish (S. Castner, Arizona Game and Fish, personal communication), in cooperation with Dr. Virginia Dalton (Pima Community College, personal communication), have been investigating the status of this species in Arizona. They have identified and are following 13 verified maternity roosts representing 10 separate colonies. The numbers in the roosts vary from 40-350, but yield an estimate of 1,000 adult females. Seven of these sites are old mines. Two historically known populations, both in caves, are now gone (1 cave was modified for public use; the other was mined away). Another population in Agua Caliente Cave, which had 100 adult females 2 years ago, has dropped by 50% since the State of Arizona, which owns the cave, let a permit to a for-profit company to conduct tours. This colony was likely larger than 100 adults in the past. Another population in Chiricahua Crystal Cave, Coronado National Forest, historically had several hundred adult females. The population is currently <100, but appears to have stabilized since the installation of a gate and restriction of public access. Another maternity colony on USFS land is at risk because the only protection provided (a posted sign) is inadequate, and the cave still experiences heavy recreational traffic. An old mine in the Kingman area, which housed the largest known maternity colony, has been destroyed by renewed mining. Although the mine roost was closed during the fall, after the maternity colony had disbanded for the season, no mitigation measures were taken (S. Castner, Arizona Game and Fish, personal communication).

Two additional maternity sites (about 150 bats in each) have recently been located in old mines along the Bill Williams River (P. Brown, Brown-Berry Biological, personal communication). One, on BLM land, experiences disturbance by mineral collectors. The other colony is 2 levels down a shaft on wilderness land and appears relatively safe from disturbance. J. Bain (National Speleological Society, Flagstaff, Arizona, personal communication) has information on 2 other potential nursery sites: 1 in a limestone fissure northeast of Flagstaff that may have several hundred animals in the summer, and a colony of unknown size near Scottsdale.

Recent information is available on 2 additional maternity sites, both in Grand Canyon National Park (Bain and Bodenhauser 1986, Bain 1988). Stanton's Cave once housed a large maternity colony of *C. townsendii*, estimated at several hundred in early September 1976 (Bain and Bodenhauser 1986). A gate built to protect archeological and paleontological resources was reinforced in the mid-1970s, apparently causing a significant decline in the populations. Surveys in July 1986 suggested that this site was no longer being used as a maternity site. A small maternity colony of 20-30 individuals was located in the Last Chance Mine in August 1987 at the same site where bats had been reported aver a number of years by Park personnel. The current status of these 2 colonies is unknown.

One potentially large hibernating site has been identified by J. Bain (National Speleological Society, Flagstaff, Arizona, personal communication) in an excavated cave in the Coconino National Forest. Most known hibernating sites, reported by him and others, contain fewer than 20 animals. He knows of >60 hibernating sites, all below 6,000 feet, with up to a dozen animals each. Winter surveys of >1,000 mines, currently being conducted by Arizona Department of Game and Fish, have located a number of sites with small groups of *C. townsendii*, but none with large aggregations (S. Castner, Arizona Game and Fish, personal communication). All surveys by Arizona Game and Fish have been conducted below snow line in areas that experience prolonged periods of above freezing winter temperatures. Limited surveys by J. Bain (National Speleological Society, Flagstaff, Arizona, personal communication) at higher elevations have not revealed hibernating sites.

Information on Arizona compiled by E. D. Pierson, relying primarily on information supplied by V. Dalton, Bam, and Arizona Department of Game and Fish.

British Columbia

C. townsendii from the coastal areas and Vancouver Island are considered to be *C. t. townsendii* and those from the inland areas *C. t. pallescens* (Handley 1959).

C. townsendii is known in Canada only from southern British Columbia, and is on the B.C. Ministry of Environment's Blue List of potentially threatened species. There are relatively few historical records: a few for *C. t. townsendii* from Vancouver Island, the Gulf Islands, and the Vancouver area, and a few for *C. t. pallescens* from the south central portion of the province as far north as Williams Lake (Handley 1959, Nagorsen and Brigham 1993). The only known maternity colony in British Columbia is in the attic of a house and contains about 60 females (Nagorsen and Brigham 1993). The young appear to be born mid-July. Lactating females have been mist netted in the Williams Lake area in the summer, but so far no maternity roosts have been found (Roberts and Roberts 1993).

Although this bat is consistently found hibernating in British Columbia, the aggregations are generally small (Nagorsen and Brigham 1993). A colony of 20-40 is known from a cave on Thetis Island. In the interior, small colonies ≤16 individuals have been found in mines and caves in the Okanagan Valley and the Williams Lake region. Recent surveys in the Williams Lake area have identified 7 hibernacula with only a few individuals per site (Roberts and Roberts 1993). Temperatures in hibernating sites are generally 5-8°C, although hibernating bats have been found with ambient temperatures of -4°- -7°C (Nagorsen and Brigham 1993).

Information on British Columbia compiled by E. D. Pierson.

California

Both subspecies of *C. townsendii* are present in California (Handley 1959). The majority of the state is a zone of intergradation for both subspecies, although *C. t. townsendii* is found primarily along the coast from Santa Barbara north, and *C. t. pallescens* is the only subspecies found in the southeastern portion of the state (Handley 1959). This species, considered a Mammal of Special Concern by the California Department of Fish and Game (CDFG), and has no special status with either the USFS or BLM.

Recent Surveys conducted by Pierson and Rainey (1996) for CDFG show marked population declines for both subspecies. Over the past 40 years, there has been a 52% loss in the number of maternity colonies, a 45% decline in the number of available roosts, a 54% decline in the total number of animals, and a 33% decrease in the average size of remaining colonies for the species as a whole across the state. The status of particular populations is correlated with amount of disturbance to or loss of suitable roosting sites, not with subspecific status. The populations that have shown the most marked declines are along the coast (most likely *C. t. townsendii*) in the Mother Lode country (within the zone of intergradation), and along the Colorado River (*C. t. pallescens*).

A comparison of former and current population estimates for 18 historically known maternity colonies shows that 6 colonies (33%) appear to be extirpated; 6 others (33%) have decreased in size; 1 (6%) has remained stable; and 5 (28%) have increased (4 of which are protected within Lava Beds National Monument and Point Reyes National Seashore).

A comparison of colony size for historically and currently known colonies indicates that mean colony size has decreased from 165 (n = 18) to 111 (n = 34). The median colony size has decreased from 100 to 75. There are currently 38 known maternity colonies occupying 55 known roost sites, with an estimated total population of about 4,300 individuals. Only 3 of these colonies have adequately protected roost sites.

Hibernating *C. townsendii* have been found historically or during a recent survey (Pierson and Rainey 1996) at 44 sites (24 in mines, 19 in caves, 1 in a building). Most of these sites contain fewer than 20 individuals. Only 3 hibernating colonies number more than 100. The largest aggregations (>100 individuals) occur in the most northern part of the state, particularly Siskiyou County, although a significant population has recently been identified at Pinnacles National Monument (S. Smith, Humboldt State University, personal communication). In other areas, particularly-the desert, smaller aggregations (5-20) are more typical, although mine shafts, found by S. Altenbach (University of New Mexico, personal communication) to house the largest aggregations, remain essentially unexplored in California. Four additional hibernating sites not considered by Pierson and Rainey (1996) were located in 1979 (Marcot 1984), 1 of which contained 40-50 individuals.

Additional surveys conducted in 1997 and 1998 (Pierson and Fellers 1998) identified 5 maternity colonies, only 3 of which had not been previously known. Extensive surveys of abandoned mines at lower elevations in the Coast Range and Sierra Nevada identified a number of potentially suitable roost sites, but only 3 maternity colonies. Three historically important cave colonies, 2 of which had been identified by Graham (1966), are vulnerable to disturbance by recreational caving.

Information on California compiled by E. D. Pierson.

Colorado

According to Handley (1959), all populations in Colorado would be *C. t. pallescens*. The species is listed as a species of Undetermined Status by Colorado Division of Wildlife, as a Sensitive Species by the USFS, and as a Species of Special Concern by BLM.

Current known historical records for *C. townsendii* from Colorado number only about 350 individuals. Of these, about 250 are from 1990 or later. Little is known of historical roost sites in the state. Since 1990, about 170 mine roosts (hibernacula, day, night, and transition roosts) have been documented; all but 1 have <30 animals. Fifteen cave roosts are known, with all populations believed to be <25 animals.

Only 11 maternity roosts have been identified for Colorado. Four, all in caves, were documented pre-1970; 7 have been found since 1990, 2 in caves and 5 in mines. Seven of these sites contain 1-8 adult females. The largest known roost, a mine site found in 1999, contains about 150 animals. Historical colony size is unavailable for any of these sites, but if these colonies attained sizes typically found in other portions of the species' range, then dramatic declines have occurred. All caves receive heavy visitation except for 1 on private property, which supported the largest number of bats, 26. A maternity site (about 50 animals) was found in a small cave in Clear Creek Fault Canyon in the early 1960s. Within a few years of the publication of a guide book to the caves of Colorado, human visitation to the cave increased, and this colony disappeared (S. Altenbach, University of New Mexico, personal communication).

Thirty hibernacula have been documented. Four were known prior to 1990; 26 have been found since 1990. Most hibernacula documented in Colorado are small, with only a few animals per site. A roost of 200 individuals was found in a mine during January 1990. The landowner reports that in 1995 the colony had only about a dozen bats. Hubbard's Cave was discovered to have a colony of 500 hibernating *C.*

townsendii in December 1968 (S. Altenbach, University of New Mexico, personal communication). This cave, which receives heavy visitation in the summer, is basically inaccessible during the winter and may still harbor a large hibernating population, although current numbers are unknown. A survey in the fall of 1994 indicated, based on the presence of some individuals, that the cave is still being used by *C. townsendii*. There are about 6 additional winter records for *C. townsendii* that lack specific locality information.

Information for Colorado was supplied by K. Navo.

Idaho

According to Handley (1959), most of the state is a zone of intergradation between *C. t. townsendii* and *C. t. pallescens* (Fig. 2). *C. townsendii* is listed as a Species of Special Concern by the Idaho Department of Fish and Game. This listing prohibits the take or possession of the species. *C. townsendii* is listed as a Sensitive Species by the Idaho BLM and Regions 1 and 4 of the USFS.

Two maternity roosts were identified in 1994 in lava-tube caves at Craters of the Moon National Monument in southeastern Idaho. One site had about 40 individuals present, the other 40-50 individuals (Keller and Saathoff 1995). There are no other historical records or accounts of maternity colonies in the state.

Surveys of hibernacula on the Shoshone BLM District in south-central Idaho (Lewis 1994) showed a 59% reduction in total bat numbers (*C. townsendii* being the dominant species) since a1987 inventory (Wackenhut 1990). The 3 largest hibernating populations showed the following reductions: Gypsum cave contained >250 bats in 1987 and 51 bats in 1994; Giant Arch contained >400 bats in 1988 and 165 in 1994; Bat cave contained 300 bats in 1988 and 128 in 1994. Many of the lava tube caves used as hibernacula on the Shoshone BLM District are popular recreational caves. Hibernating populations on the Idaho National Engineering and Environmental Laboratory (INEEL) appear to be stable (B. Keller, Idaho State University, personal communication). Recreational caving is not allowed on the INEEL.

Recent surveys in Bear Lake County (B. Lengas, Utah State University, personal communication), conducted between March and November 1993, identified a small hibernating population (22 animals) in Minnetonka Cave. This cave is open to the public as a commercial cave in the summer and has no summer bat population. Four nearby adits were also occupied by 1 or 2 *C. townsendii*; 2 in the winter, 1 in the summer, and 1 year round. Three additional adits in Bear Lake County had single hibernating *C. townsendii*. Additional roost sites have recently been identified throughout Idaho in mines and caves (B. Keller, Idaho State University, personal communication; L. Lewis, Idaho BLM, personal communication; P. Call, Idaho BLM, personal communication), including a lava-tube cave (Niter Ice Cave) on private property in Caribou County with 50 hibernating *C. townsendii* (M. Wackenhut, Idaho Fish and Game, personal communication). No trend information is yet available for these sites. Two mines and 2 lava-tube caves are gated in Idaho to conserve local bat populations.

Information for Idaho supplied by B. Keller, B. Lengas, L. Lewis, P. Call, and M. Wackenhut.

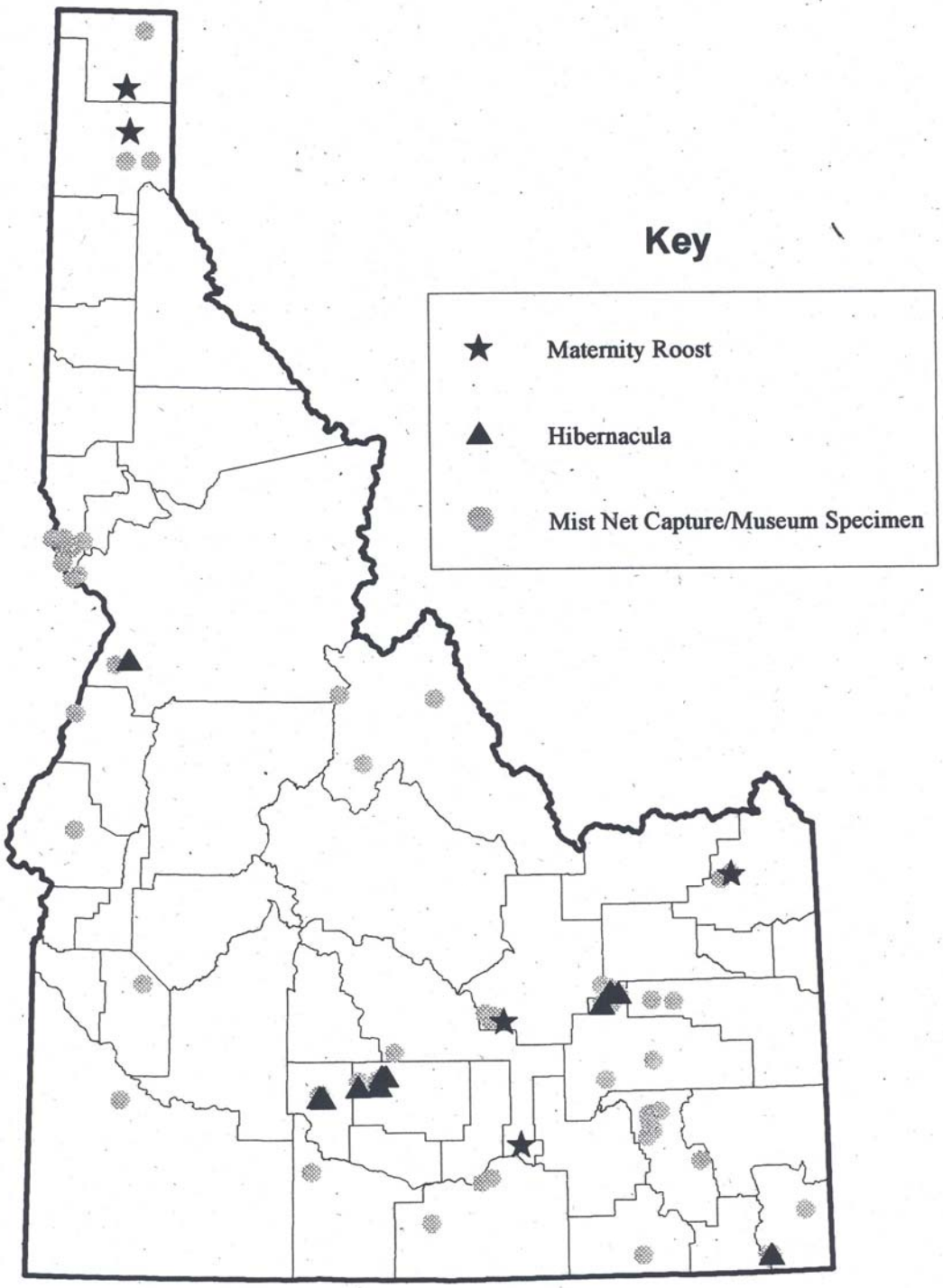

Fig. 2. Known distribution of *Corynorhinus townsendii* in Idaho.

Kansas

According to Handley (1959), all populations should be *C. t. pallescens*.

This species is well known from the gypsum caves of Barber and Comanche Counties in south-central Kansas. Maternity, hibernating and summer male populations are known to occur here (Humphrey and Kunz 1976). Band injuries, reduction in size of a maternity roost, and abandonment of a maternity roost (resulting from disturbance during a study lasting from 1968-1971) have been reported (Humphrey and Kunz 1976). Current information on the status of this species in Kansas is not available, but it is listed by the Kansas Department of Wildlife and Park as a Species in Need of Conservation.

Information for Kansas supplied by S. Altenbach.

Montana

C. townsendii has been found at locations in western and south-central to eastern Montana. Only north-central Montana (Hi-Line) is without records of occurrence. The primary subspecies is *C. t. pallescens*. There is a possible zone of overlap with *C. t. townsendii* in the southwestern portion of the state.

C. townsendii is listed as a Species of Special Concern and considered quite rare (especially colonies) by Montana Natural Heritage Program (MTNHP). It is considered a Sensitive Species by the USFS and an unprotected nongame species by Montana Department of Fish, Wildlife and Parks. The only protective status for bats in Montana is provided through "Sensitive Species" status on USFS lands and through the Federal Cave Resources Protection Act.

Four maternity roosts are known: Lewis and Clark Caverns State Park (125-175 females); a private hard rock mine within the Flathead Indian Reservation (75 females); 2 limestone caves along Jefferson River (50 females).

At least 12 hibernacula are known, with most containing only a few individuals. Mystery Cave (BLM-gated) holds 50-100 *C. townsendii* and varying numbers of *Myotis* spp.; a private hard-rock mine in western Montana contains 60-120 (this mine will be gated). A popular cave in central Montana contained approximately 30 hibernating *C. townsendii* (T. Butts, Helena, Montana, personal communication). A winter survey of the Pyror Mountains identified several caves with 5-25 individuals in each. Most other winter locations are 1-5 individuals in small mines or caves.

The Department of State Lands (DSL) has administered an ambitious abandoned mine closure program for several years. Unfortunately, severed known or potential *C. townsendii* hibernacula were destroyed (mostly abandoned coal mines). In 1994 the Abandoned Mine and Reclamation Bureau developed an agreement with the MTNHP to review mines slated for closure. This arrangement has been very successful with several mines recommended for bat gating in the first year. DSL has expressed a willingness to work with private mine owners to provide funding and logistical support to gate their adits. A DSL-sponsored workshop in 1995 brought together federal and state agency staff for review of the bats and abandoned mine program (sponsored by Bat Conservation International, Inc. [BCI] and MTNHP).

Recent field studies have confirmed 10 locations for *C. townsendii* in 3 years. Field studies on *C. townsendii*, continue to be coordinated through the MTNHP. All location data and reports are incorporated into their database files and available for project review and conservation planning (data security and release based on normal procedures for threatened and endangered species).

Information for Montana supplied by D. L. Genter.

Nebraska

According to Handley (1959), any *C. townsendii* in Nebraska would be *C. t. pallescens*.

There is only a single record for *C. townsendii*, probably *C. t. pallescens* (Handley 1959) from Nebraska. This specimen was a male, found hanging on a screen door in Sheridan County on 5 October 1972. Unless other records have been reported this species should be considered an unlikely resident in Nebraska.

Information for Nebraska was supplied by S. Altenbach.

Nevada

According to Handley (1959), central and southeastern Nevada populations would be *C. t. pallescens* and northwestern Nevada is part of the intergradation zone between the *C. t. pallescens* and *C. t. townsendii*. This species receives no state protection.

Ports and Bradley (1996) have been collecting information on *C. townsendii* in northeastern Nevada since the early 1980s. In that time they have identified 3 maternity roosts (30-40 females in 1 roost, and unknown numbers in the others) for a 37,000 square mile area (P. Bradley, Nevada Department of Wildlife, personal communication). Reproductively active *C. townsendii* (both male and female) have been found at 5 out of 30 sites (17%) surveyed during the breeding season. Three of 10 cave/mine sites (33%) were confirmed *C. townsendii* maternity roosts. During this same survey period *C. townsendii* ranked fourth in relative abundance (individuals/total) of 12 species captured. Thirty *C. townsendii* individuals were captured in 296 hours of mist/harp trap surveys (0.1 bats/hr) and *C. townsendii* individuals were captured at 10 of the 30 sites (33%) sampled. Most of these were non-reproductive males (Ports and Bradley 1996). A 1966 survey of caves in eastern Nevada identified 16 bat caves and provided population estimates for many of them (Soulages 1966). Unfortunately, survey dates are rarely supplied, making it difficult to distinguish between maternity and hibernating sites. At least 2 caves had significant maternity colonies (80-100 individuals in one, 150-200 in the other). One cave was identified as a hibernating site, and 1 as having a year round population. One of the maternity sites, Old Man Cave, was resurveyed in the summer of 1993 (B. Lengas, Utah Sate University, personal communication) and 1994 (P. Bradley, Nevada Department of Wildlife, personal communication), and found to contain 15 adult *C. townsendii* in 1993 and about 30 in 1994, a decline from the 80-100 individuals (40-50 adults if surveys were done after young were identifiable in the colony) found in 1966. Seasonal use restrictions have been implemented at this cave by the USFS. Another cave, just north of Old Man's Cave, has a maternity colony of 15-20 females.

The abandoned mine program in Nevada is administered by the Nevada Division of Minerals (NDOM). Three thousand mines were closed prior to 1994 without wildlife surveys. The NDOM is now providing the Nevada Department of Wildlife (NDOW) with mine locations prior to closure. Mine closure protocol is now being developed by an interagency team. No information is available on gating of mines in Nevada, although the NDOM has sanctioned barbed wire fencing to relieve liability.

Information for Nevada was supplied by P. Bradley and B. Lengas.

New Mexico

According to Handley (1959), all populations in New Mexico would be *C. t. pallescens*. This species receives no state protection.

Since 1991, a cooperative program between the University of New Mexico and the New Mexico Abandoned Minelands Bureau has evaluated over 300 mines for bat use. About 45% of the abandoned mines surveyed to date have some form of bat use, and about 90% of those are occupied by *C. townsendii*.

The majority of the mines used by *C. townsendii* are hibernacula for 1-50 (1-5 most frequent) individuals. One mine has 100-300 individuals, and another about 100. The Black Canyon Mine in Socorro County was evaluated in October 1992 and found to have very large numbers (probably several thousand). In early November of that year a cursory evaluation of only 1 of several levels revealed >1,000 torpid bats. Between that time and early February of 1993 the timbers of the mine's 300-foot shaft were burned, probably by vandals. About 100 bats survived in the adit that served as an air intake, but it is likely that all others died. The majority of the mine is now inaccessible, and the full impact of the fire will never be known. Between 100-200 bats continue to use the adit level as a hibernaculum.

Seven maternity colonies of this species are known in abandoned mines. One has 300-500 animals, 1 has about 100, and 5 have 10-50. A colony in the Black Canyon Mine, Socorro County, was probably very large before the fire in 1992-1993, but now numbers only about 25 individuals. In addition, 2 maternity colonies are known from caves: 1 of >1,000 individuals was reported in a cave on the El Malpais National Monument in May 1991 (B. Rogers, U.S. Geological Survey, personal communication), and another of 50-100 is reported from a deep vertical cave in Dona Ana County. One bachelor colony of about 75 individuals and 5 intermediate (post hibernation) roosts with 5-25 individuals are also known in mines.

To date 44 bat-compatible closures have been installed on mine entrances. These are primarily bat gates, but include a few cable nets with "bat windows". All entrances on gated mines that are not used by bats have been secured with closures that maintain airflow. At present 24 additional bat compatible closures are in design or preconstruction phase. Time limitation has permitted a follow up on only a few of the mines that have been gated. Populations in all appear stable, and one, a hibernaculum, has had a population increase (survey in January 1995) from 100 to about 200 individuals. Another, a maternity colony, has a much larger yearly guano accumulation beneath the roost than before gate installation.

A hibernating colony of "several thousand" bats in Fort Stanton Cave in Lincoln County was vandalized in the 1970s and in 1991-1993 had between 850-1,000 individuals. About 300 bats were present in 1994-1995. Even though this cave has been gated, the gate is repeatedly violated. Other caves in the region have winter populations in the low hundreds, but were reported to have far higher populations over the last 10-20 years. A remote lava tube cave in central New Mexico that had about 400 hibernating individuals in 1980 now has 130. Many limestone, fault, and lava caves around the state have hibernating populations that typically number 1-10, and a few with as many as 50 individuals. Although data on populations in these caves are scarce or anecdotal, there are no examples of increases, and declines of 10-100% over a 20-year period are estimated in several.

One barrier to understanding the status of this species in New Mexico is mistrust between the biological and caving communities. Parts of New Mexico have hundreds of caves that almost certainly contain hibernating, maternity, bachelor, and intermediate colonies of this species. Although the majority of the caving community is cooperative and responsible, some are hesitant to inform anyone of the presence of bats that they encounter in caves because they fear that the caves may be closed to recreational-activities.

Major threats to this species in New Mexico are recreational use and vandalism of caves and abandoned mines by the general public. An additional threat is the closure of abandoned mines by private landowners or by claim and patent holders. The New Mexico Abandoned Mine Lands environmental assessment program is the most progressive in the nation and does not present a threat to this species.

Information for New Mexico was supplied by S. Altenbach.

North Dakota

No information is available, but Hall (1981) suggests *C. townsendii* could be found here.

Oklahoma

According to Handley (1959), all populations in the western comer of Oklahoma should be *C. t. pallescens*, and those in the extreme northeastern part of the state should be *C. t. ingens*. Populations in the central portion of the state are in a zone of intergradation between *C. t. pallescens* and *C. t. ingens*. The Oklahoma Department of Wildlife Conservation lists *C. t. pallescens* and *C. t. ingens* as Species of Special Concern.

C. t. pallescens is well known from the western half of the state, where it forms maternity, hibernating, and bachelor colonies. The majority of roost sites in the western part of the state are in caves, although there are a few abandoned mines in this part of the state apparently occupied by this species.

Recent surveys of the gypsum caves in the western part of the state (W. Caire, Central State University, Edmond, Oklahoma, personal communication) suggest a marked decline in numbers over the last 20 years. A survey of 70 caves in this region located only 90 individuals. A maternity colony in Alabaster Caverns, formerly numbering about 100 individuals, is now estimated at 20-30 individuals. Information on this subspecies is limited by the amount of time and funds allocated for surveys, and by difficulty in obtaining information on bats from members of the caving community.

Information on Oklahoma supplied by S..Altenbach.

Oregon

Both subspecies of *C. townsendii* are present in Oregon (Handley 1959). The populations in the western part of the state are considered to be *C. t. townsendii*. The remainder of the state is a zone of intergradation for both subspecies. This species is proposed for listing as threatened or endangered by the Oregon Department of Fish and Wildlife. It is on the sensitive species list for BLM and Region 6 of the USFS.

Six significant maternity colonies of *C. townsendii* have been identified in Oregon (Cross et al. 1976, Perkins and Levesque 1987, Cross and Waldien 1994), ranging in size from 150-400 females. These are located in Curry, Deschutes/Jefferson, Douglas, Jackson/Josephine, Malheur, and Wallowa counties.

Large hibernating populations (130 to >300 individuals) are known from the mountains and the east side of the Cascades in Grant, Deschutes; and Malheur Counties. A number of other hibernating sites have been located throughout the state, but in areas with moderate winter climates these colonies typically have ≤30 bats.

Population declines have been documented for western and central Oregon colonies. Perkins (1990*b*) most recent summary documents from 1980-1990, 3 maternity colonies were extirpated, 4 populations showed declines of 30-53%, 6 appeared stable, and 1 showed a 16% increase. Two populations located on the north coast believed to have been extirpated, were found using old bunkers as hibernacula. Most populations are on federal lands. All population declines are known to be due to human disturbance of roost sites. Recent counts indicate total numbers for the state between 2,500-3,000 individuals.

Information for Oregon supplied by J. M. Perkins.

South Dakota

According to Handley (1959), all populations in South Dakota should be *C. t. pallescens*. *C. townsendii* is listed as an S2/S3 species by the South Dakota Natural Heritage Data Base arid is afforded general protection by the South Dakota Game, Fish, and Parks Department statute that provides protection to all wildlife unless there is a specific season for take.

All recent research on *C. townsendii* in South Dakota has been focused on the Black Hills. Three relatively small maternity roosts are currently known, 2 with about 50 animals each, and 1 with about 35 animals (J. Tigner, USFS, personal communication; Tigner and Aney 1994). The current status of a nursery colony in a small sandstone cave in Fall River County, from which 40 bats were taken in July 1968 (Turner and Jones 1968), is unknown (J. Tigner, USFS, personal communication). Private industry was responsible for the closure of over 100 mines without conducting biological surveys (J. Tigner, USFS, personal. communication).

Information on South Dakota compiled by E. D. Pierson, and supplied by E. Stukel and J. Tigner.

Texas

According to Handley (1959), western Texas is a zone of intergradation between *C. t. pallescens* and *C. t. australis*, and northern Texas a zone of intergradation between *C. t. pallescens* and *C. t. ingens*. This species receives no state protection.

Schmidly (1991) reports that this species occupies gypsum caves in the northern part of its range in Texas, and caves and mines in the Trans-Pecos. The Mariscal Mercury Mine complex in Big Bend National Park was found to house a maternity colony of many hundreds of individuals and was used as a hibernaculum for the species as well (Altenbach 1994). Multiple entrances to the mine complex were originally closed in the 1980s by the National Park Service, using a variety of materials to block human access. Fortunately the closures were crude enough to allow bat access through some of the openings and the colony persisted, although predation by ringtails (*Bassariscus astutus*)occurred in restricted openings. This complex is now secured with appropriately designed bat compatible closures. As a consequence, the colony and habitat are now protected. Only the action of the Park Service in evaluating this habitat prevented its final and destructive closure. This incident illustrates the threat posed by mine closures and raises the question of the consequence of other mine closures in the region. Abandoned mine evaluation in Guadalupe Mountain National Park found evidence of maternity, hibernation, and post-hibernation use by *C. townsendii*. All mines that had use, or potential for use, were secured with bat-compatible closures.

Information on Texas supplied by S. Altenbach.

Utah

Most *Corynorhinus townsendii* in Utah are assumed to be *C. t. pallescens* (Handley 1959), with a possible small zone of intergradation with *C. t. townsendii* in the northwest corner of the state. *C. townsendii* is listed as an S2 species (a species of special concern because of limited distribution and habitat) by the Utah Division of Wildlife Resources, and a sensitive species by the USFS and BLM. This species is widely distributed in Utah and is the most common species observed in caves and mines (although generally in low numbers).

There are 13 historically known maternity and hibernating colonies that no longer exist (3 in caves, 8 in mines, and 2 in buildings). Seven of these sites (1 cave, 6 mines) have been sealed, and the rest have been abandoned. Most notable of which are 2 maternity colonies that are believed to have been entombed as a result of mine reclamation. A large maternity roost above Alpine, Utah, was closed by the USFS in July, 1991, and it is most likely that the colony was entombed as a result of this closure. Another large mine was closed by a local law enforcement agency near Elberta, Utah. This mine was used as a roost by several species, including a maternity colony of *Corynorhinus townsendii*. This site was closed in 1989 with the bats roosting inside. The remaining mines were most likely closed as a result of natural subsidence.

There are currently 15 known maternity roosts in Utah: including in 6 caves and 9 in abandoned mines. Maternity colonies range in size from 15 to >500 mature females. Five of the 9 roosts in abandoned mines have been gated by the Utah Division of Oil, Gas & Mining Abandoned Mine Reclamation Program (UDOGM, AMRP), as have 2 of the caves (by USFS). Additionally, >100 bachelor roosts have been located, some of which have been gated, while others are scheduled to be closed with bat gates. The UDOGM abandoned mine reclamation program is actively surveying and closing abandoned mines throughout the state, and follows a pre-closure survey protocol, developed to identify and protect bat roosts (Utah Division of Oil, Gas & Mining Abandoned Mine Reclamation Program Bat Survey Policy: A Protocol For Conducting Internal Mine Evaluations).

Information for Utah was supplied by B. Lengas, R. Sherwin, and D. Stricklan.

Washington

Both subspecies of *C. townsendii* are present in Washington (Handley 1959). The populations in the western part of the state are considered to be *C. t. townsendii*. The remainder of the state is a zone of intergradation for both subspecies. This species is a state candidate for listing as threatened or endangered.

For 2 populations, both maternity and hibernating sites have been located (Perkins 1990*b*). One population near Mt. St. Helen's has doubled in size since the eruption in 1980 due to lowered human disturbance in the area. This population, currently at about 350 females, nevertheless, has about 50% fewer animals than in the 1960s (Perkins 1990*b*). The other population, near Mt. Adams, has increased by about 5% in the last 10 years and has stabilized at about 250-275 females. Two additional maternity sites have been identified in abandoned buildings, in Lincoln County, along the Columbia River.

The hibernating populations associated with Mt. Adams and Mt. St. Helens are both large (>200 animals). Smaller hibernating populations are known from a few other areas, including Whatcom (near Bellingham), Asotin, and Yakima Counties (Perkins 1990*b*).

A maternity colony of about 100 *C. townsendii* was located in Boulder Cave on the Naches River in July 1930 (Scheffer 1930). The population in this cave numbered 81 in a 1994 winter count (M. Perkins, Salt Lake City, personal communication). The road to this cave is now gated and patrolled.

The identified populations for the state now total about 600 animals, although much of the state has yet to be surveyed.

Information for Washington supplied by J. M. Perkins.

Wyoming

All Wyoming populations are *C. t. pallescens*. This species is a USFS Region 2 and Region 4 Sensitive Species. It is also considered a Species of Special Concern (SSC2) by the Wyoming Game and Fish Department (WGFD). The SSC2 category includes species for which populations are declining or restricted in numbers and distribution, and which are experiencing on-going loss of habitat. Also, Wyoming Game and Fish Commission Nongame Wildlife Regulation, Section 11, prohibits intentional take of *C. townsendii* and all (other bat species, except as approved by WGFD to address public health concerns.

Three maternity sites (numbering 46, 50+, and 200+ individuals) are known for *C. townsendii* in Wyoming (1 in an abandoned gated mine and 2 in caves). There is little historical data on bat numbers or locations, and no pre-1994 information on classification of caves or abandoned mines as to bat presence or habitat potential. Fifty-nine caves and 17 abandoned mines were surveyed between May and October 1994. Twelve sites were occupied by *C. townsendii* at the time of the survey, which included at least 1 or, in most cases, 2 nights of mist netting the entrance, and a daytime interior survey. Of the 12 sites occupied, 6 were night roosts of 1-2 *C. townsendii*,2 were both day and night roosts of 1-3 *C. townsendii*. Two sites were classified as hibernacula with 1 and 3 *C. townsendii*, respectively. Two sites were maternity colonies, estimated at 50+ females and 200+ females, respectively. Both were counted during brief interior surveys, and mist netting was not conducted.

Information for Wyoming was supplied by B. Luce.

THREATS

Summary of Threats

Threats facing *C. townsendii* can be categorized into those that are primarily human-induced (anthropogenic) and those resulting from natural events and/or the ecology of the species. Threats can further be categorized as those with the potential to affect *C. townsendii* habitat (roosting, foraging, or migration corridor habitats) and those that would have the potential to cause direct *C. townsendii* population declines with no disturbance of habitats.

All threats have the potential to affect either roosting, foraging, or migrating segments of the population. Many threats are interrelated, and it was not the intent here to down play their connectivity, but rather to make the document as usable as possible.

Overall, the most serious factor leading to population declines in bats, including *C. townsendii*, is loss and/or disturbance of suitable roosting habitat (Tuttle 1979, McCracken 1988, Perkins 1990*b*). Loss and/or degradation of foraging habitat may also be a contributing factor in the declines of *C. townsendii*

populations (Pierson and Rainey 1996). *C. townsendii* roost fidelity, longevity, and low reproductive capability all combine to intensify any negative effects of anthropogenic threats to the species.

Anthropogenic Threats

Abandoned Mine Closures.--During the 1980s and 1990s, thousands of abandoned mines have been closed in the West with no input from wildlife professionals (P. Bradley, Nevada Department of Wildlife, personal communication; B. Luce, Wyoming Game and Fish, personal communication; K. Navo, Colorado Division of Wildlife, personal communication; D. Stricklan, Uinta National Forest, personal communication; Belwood and Waugh 1991; Brown and Berry 1991; Pierson and Brown 1992; Riddle 1995). In many states, mines represent a substantial portion of the suitable roosting habitat available to *C. townsendii* and act as substitute habitats in areas where intense recreational caving and vandalism have made natural roosts unsuitable. In some areas (e.g., the desert areas of California and portions of New Mexico) almost all known roosts are in mines (S. Altenbach, University of New Mexico, personal communication; P. Brown, Brown-Berry Consulting, personal communication; Pierson and Rainey 1996). Several thousand *C. townsendii* have been found in 1 abandoned mine in New Mexico (S. Altenbach, University of New Mexico, personal communication). Closure of abandoned mines for hazard abatement is typically accomplished by either fencing, signing, or blasting closed/bulldozing/sealing all openings with barriers such as soil/rock or block walls. In addition to the loss of suitable roosting habitat, the closure may result in a direct loss of bats if done in such a manner that bats are trapped inside the mine. Although a limited number of mine workings serve as significant bat roosts, the cumulative effects of closing many small roosts as well as a few large roosts may be devastating to *C. townsendii* populations in the West.

In some states, the presence or absence of historical mining activity within contemporary mining districts have, in the past, had little impact on the decision making process in terms of wildlife related issues. Also, the activities of state sponsored abandoned mine lands (AML) programs have, in the past, not included wildlife inventories and recommendations in their closure programs.

Recreational Caving.--Interest in recreational caving is increasing in America. Current membership in the National Speleological Society (NSS) is approximately 11,500, a 28% increase from 1991 (J. Gurnee, National Speleological Society, personal communication). Most NSS cavers support cave conservation (NSS News, July 1994), and many agency cave managers have excellent working relationships with NSS groups (R. Alward, BLM, personal communication; K. Baldino, Death Valley National Monument, personal communication; M. Bilboa, BLM, personal communication; B. Boggs, BLM, personal communication; B. Edmonsen, Lava Beds National Monument, personal communication; J. Goodbar, BLM, personal communication; J. Nieland, U.S. Forest Service, personal communication; P. Call, BLM, personal communication). Along with the obvious benefits that educated, conservation minded cavers offer to cave management come the undeniable negative impacts that increased roost visitation has on sensitive bat species. The sensitivity of *C. townsendii* to human disturbance of roost sites is well documented (Pearson et al. 1952, Graham 1966, Stebbings 1966, Mohr 1972, Humphrey and Kunz 1976, Stihler and Hall 1993, Pierson and Rainey 1996). *C. townsendii* maternity and hibernation roosts that experience increased visitation rates during critical use periods experience concomitant losses in colony populations. Graham (1966) blamed the abandonment of several maternity sites by *C. townsendii* in California on the repeated visitation by people due to the popularity of the caves. Barbour and Davis (1969) also attributed the increase in abandonment of maternity sites throughout the species' range to an increase in spelunking activity. Pierson and Rainey (1996) have shown that those colonies with the greatest population declines also experience frequent disturbance. A long-term study of a number of cave roosts in West Virginia has shown that excluding humans from roost sites by gating or fencing has resulted in increases in *C. townsendii* populations (Stihler and Hall 1993). When gates have been

breached, populations have dropped precipitously and recovered slowly. For example, following protection, 1 colony increased over a 3-year period from 739 to 1,137 bats. The summer after the cave was illegally entered, the colony numbered only 286, and 4 years later had only recovered to about 40% of the pre-vandalism levels.

A notable distinction exists between most NSS cave groups and nonaffiliated recreational cavers, the flashlight explorers who have little or no understanding of cave resources (J. Nieland, personal communication). Uninformed and/or misinformed spelunkers present a significant threat to bats and bat habitat. It is not uncommon to find roosts littered with dead bats, obviously killed by humans (Mohr 1972, Tuttle 1979, Pierson and Rainey 1996). S. Altenbach (University of New Mexico, personal communication) reported that several thousand *C. townsendii* were killed in an arson mine fire in New Mexico in 1992. K. Baldino (Death Valley National Monument, personal communication) reported that an individual was seen shooting a high powered rifle into a *T. brasiliensis* day roost (approximately 80,000 bats) in Nevada in 1993. These unrelated incidents underscore the extreme susceptibility that aggregated bat populations have to injury by an uninformed and/or misinformed general public.

The negative impacts to *C. townsendii* populations are further exacerbated by agency promotion of recreational caving. Public land cave locations are often included on agency maps that are dispersed to the public. The U.S. Geological Survey (USGS) has traditionally included cave locations on the 7.5-minute series (topographic) maps. Cave locations have been freely dispensed upon inquiry to civic groups, the media, and the general public. These factors, together with improved and increased road networks, have made many caves with bat habitat easily accessible to the general public, thus increasing roost visitation and potential harassment.

Agencies have frequently placed gates on caves to control recreational use and protect cave resources. Gates have been installed that are not built to bat specifications, making the cave unsuitable habitat.

Some elements of the caving community have observed agency cave management and have withheld information about cave locations or cave resources out of fear of increased regulation or poor management. Barriers to communication between cave managers and cave user groups could contribute to further losses in bat habitat.

Renewed Mining at Historical Sites.--Much of the contemporary open pit gold mining in the West is associated with historical hard rock mining districts. Historical underground workings (shafts, adits, stopes, etc.) sometimes become incorporated into current open pit mining plans of operation (Belwood and Waugh 1991, Brown et al. 1993, Brown 1995). Eventually, older hard rock mines are shaved away by the newer open pits. *C. townsendii* roosts have been lost under these circumstances (Pierson and Rainey 1991, 1996). At times, limestone solution caves were incorporated into the workings of historical hard rock mines (M. Wilkins, personal communication). Open pit mining in these sites could destroy natural caves as well.

Toxic Material Impoundments.--Cyanide is used in the processing of gold ore (Silva 1988, Nevada Mining Association et al. 1990). A cyanide solution is sprayed on gold bearing ore and later collected in ponds of varying size. These ponds often contain lethal levels of cyanide and heavy metal compounds (Eisler 1991). At times, lethal concentrations of cyanide also become ponded atop ore piles. In Nevada, 15 mines reported killing at least 158 bats (species not identified) between 1986 and 1989 in their cyanide solution ponds (Nevada Division of Wildlife, unpublished data). Another study documented extensive mortality to bats at cyanide-extraction gold mines in Arizona, California, and Nevada (Clark and Hothem 1991). Regulations designed to eliminate this source of mortality through netting and neutralization were established in April 1990, and reported mortalities decreased significantly as a result. A troubling

unknown is how many of these mortalities go undetected and thus unreported; particularly those mortalities that result from bats using ponded water atop ore piles. Also, as before mentioned, much of the contemporary open pit gold mining in the West is associated with historical mining districts. Locating toxic water sources in close proximity to established *C. townsendii* roost sites may be a deadly consequence of these associated land uses. This problem may be particularly severe in desert areas, where water associated with mining operations may be the only available water in an area.

Oil reserve pits associated with oil drilling operations can be a source of bat mortality (Flickinger and Bunck 1987; Esmoil and Anderson 1995; B. Luce, Wyoming Game and Fish, personal communication). Bats have been found dead at these ponds, and additional mortalities probably go undetected and unreported. Locating these pits near roost sites may result in increased losses.

Pesticide Spraying.--*C. townsendii* forages primarily on moths (Ross 1967; Whitaker et al. 1977, 1981; Dalton et al. 1986, Perkins and Schommer 1991; Sample and Whitmore 1993). Nontarget insecticide sprays reduce the number and quality of insects in an area available to *C. townsendii* (Brown and Berry 1991) and have been identified as contributing to the decline of North American bat populations (Clark 1981). Nontarget lepidopteran sprays, used to control gypsy moth outbreaks, may reduce moth populations in specific spray sites for years. *Bacillus thuringiensis* (*Bt*) sprays may suppress tussock moth and spruce budworm reproduction enough to suppress 1-2 years of *C. townsendii* reproduction in project sites (Perkins and Schommer 1991).

Nontarget Lepidoptera studies in the East, examining the effects of *Bt* sprays and gypsy moth defoliation on the food source for *C. t. virginianus* concluded that both defoliation and control measures could have an impact on the food base. *Bt* applications reduced species richness and abundance of larval and adult nontarget Lepidoptera, and richness and abundance of some larval and adult Lepidoptera were also reduced in the defoliation plots (Sample et al. 1993*a*, Sample and Whitmore 1993). Impacts to the larval stage are seen the year of *Bt* application while adult population impacts may also be seen the same year or observed the following year.

Nontarget species research has also been conducted with the insecticide diflubenzuron (Dimilin). Dimilin is an insect growth regulator that inhibits chitin synthesis. It is detrimental to immature or larval insects but is generally not lethal to adult insects. Dimilin has been shown to produce significant indirect effects by reducing the food available to bats (Sample et al. 1993*b*). Impacts to the larval stage are seen the year of Dimilin application, while adult impacts can be seen the same or following year.

Insecticides primarily used in large scale spray projects in agricultural or range settings are malathion and carbaryl. These are broad scale insecticides that impact numerous species of insects. Each year, thousands of acres are chemically treated across the western U.S. to control insect pests. It is difficult to assess what impact these sprays are having on insectivores in general. However, impacts could be significant in target spray areas where large amounts of the prey base are being removed.

In addition to the direct effects on the food source of bats, temperate region bats may also be at risk of direct poisoning by insecticides as a result of their diets, high metabolic rates, high food intake, and high rates of fat mobilization during migration, hibernation, and lactation (Clark 1988).

Vegetative Conversion.--Millions of acres of native shrub-steppe habitats have, through the agents of fire and mechanical and chemical vegetation manipulation, been permanently converted to monotypic exotic grasslands. Exotic annual bromes and wheat grasses account for the bulk of this conversion. Effects on lepidopteran populations are unclear, although most terrestrial forms are known to reproduce

on shrubs, trees, and flowering plants, and not on grass species (S. Smith, Lassen National Forest, personal communication).

Livestock Grazing.--Livestock grazing practices have been responsible for large-scale conversions of mesic riparian habitats to more xeric upland-habitats across the range of *C. townsendii*. Limited data on foraging strategies of *C. townsendii* show a considerable site specificity and a preference for edge habitats between streams and mountain slopes (Clark et al. 1993). A radio-tracking study in coastal California documented this species foraging primarily in riparian areas (Fellers and Pierson In prep). Much edge habitat disappears when riparian habitats are converted to upland habitats. It is unclear how this may have affected *C. townsendii* populations in the West. If *C. townsendii* are using these edge sites merely for their physical configuration, vegetation conversions may have had little impact on the species. However, if riparian vegetation is, for example, a critical component in the life cycles of preferred prey items, then long-term vegetation changes may have had significant impacts on *C. townsendii* populations. For example, *C. townsendii* populations have shown a strong preference for Noctuid moths (Shoemaker and Lacki 1993). Noctuid moths are obligate users of lentic vascular hydrophytes (*Tyha, Salix, Pontederia, Nuphar, Eichhornia, Polygonum*) (Lange 1979). It follows that in regions where these host plant species have been lost or reduced, that the prey base has also been reduced for *C. townsendii*.

Timber Harvest.--Timber harvest practices may impact both roosting and foraging habitat for bats (Barclay and Brigham 1996). Twelve species of bats occur in the old-growth forests of the Pacific Northwest (Christy and West 1993), and at least 17 species in the forested regions of northern California (Rainey and Pierson 1996). Approximately 5% of the historic old-growth forests remain standing in the Northwest. In parts of the Northwest where rock cavities are uncommon, basal hollows in old-growth redwoods may provide significant roosting habitats for cavity-roosting bat species such as *C. townsendii*. In 2 independent studies of bat use of redwood hollows in northern and central California, 100% were used by bats (Rainey et al. 1992, Gellman and Zielinski 1993). *C. townsendii* has been found day roosting and night roosting in basal hollows of redwoods and California bay laurel in coastal California (Fellers and Pierson In prep). Where trees are used as day roosts, logging activities have been known to extirpate locally roosting bats during the work activities (Perkins 1991). Impacts may range from temporary displacement to elimination of potential roost sites. Additional losses of old-growth timber may result in losses of *C. townsendii* populations in those areas where alternative roost sites do not exist.

Inventory, Monitoring, and Scientific Research.--Research activities can depress, scatter, or extirpate populations of *C. townsendii* (Pearson et al. 1952, Humphrey and Kunz 1976, Kunz and Martin 1982, Perkins and Schommer 1991). As previously cited, *C. townsendii* sensitivity to human disturbance of roost sites is well documented. For some of the same reasons that recreational caving can have a negative impact on *C. townsendii*, increased roost visitation by scientists can have similar effects.

Human disturbance at *C. townsendii* maternity sites is a major concern. In one study, sampling at maternity roosts was blamed for a marked decrease in the sizes of the colonies; no recovery was observed the following year, so sampling was discontinued. The authors concluded that visitation to nursery colonies could threaten the survival of *C. townsendii* in the Great Plains (Humphrey and Kunz 1976). Pearson et al. (1952) noted that repeated banding activities at maternity roosts caused the females to move to alternative roost sites carrying their young with them.

Hibernating *C. townsendii* are also easily disturbed. Twente (1955) noted that many bats left the hibernaculum as a result of banding, many of which were never recaptured. Pearson et al. (1952) and Humphrey and Kunz (1976) also noted increased winter movements by *C. townsendii* individuals to alternate hibernacula as a resort of handling and monitoring during the winter months. Disturbance by humans of winter hibernation roosts can arouse bats from hibernation causing them to expend roughly 10-

30 days of their body fat reserves during each arousal period (Tuttle 1991). Bats subjected to excessive disturbance during the winter months often run out of energy reserves and die of starvation prior to the arrival of spring.

C. townsendii can be vulnerable to injury from wing banding (Humphrey and Kunz 1976, Pierson and Fellers 1994). Excessive collections for scientific purposes can also impact populations. In California, a colony in Marin County was almost entirely eliminated in 1 collecting effort (Pierson 1988). Often, the long-term effects of collecting bats for scientific purposes are not known, but given the low reproductive potential of *C. townsendii*, they are likely to be damaging. This is particularly true where colonies have been subjected to repeated collections or where the series represent a significant proportion (>20%) of the population (Pierson 1988).

Eradication.--In the past, state funded (primarily Health Department) projects designed to protect the public from rabies transmission targeted the elimination of bat colonies. Little if any research went into determining whether or not target colonies were in fact reservoirs of the rabies virus. State agencies typically had a biased view of the incidence of rabies in bat populations as those bats that were brought in for testing were more likely to be the sick, easily caught individuals. It is unclear whether or not these policies are continuing in western states within the range of *C. townsendii*.

State Status.--Classification and statute protection of *C. townsendii* varies from state to state. Western states classify certain segments of their mammal biota as unprotected. Some states classify all mammals with the exception of big game, furbearers, and sensitive, threatened and endangered species as unprotected. This unprotected group customarily includes most of the species in the orders Carnivora, Chiroptera, Insectivora, and Rodentia. "Unprotected" generally means there is no regulated season of take for the animal, and in some states an individual does not need a hunting license to kill unprotected animals. Most bats are unprotected in Montana, Nevada, New Mexico, and Utah. *C. townsendii* is still an unprotected mammal in states (Nevada and New Mexico) where statute regulation changes are lagging behind federal listing changes.

Natural Threats

Behavioral Ecology.--The roosting behavior of *C. townsendii* makes this species highly vulnerable to disturbance. The animals typically roost in highly visible clusters on open surfaces, rarely seeking shelter in crevices as many other bat species do (Dalquest 1947, Barbour arid Davis 1969, Kunz and Martin 1982). During the summer months, if undisturbed, a maternity cluster will generally roost in the twilight zone, close to the entrance of a cave or mine. Likewise in the winter, animals are frequently found in well ventilated areas close to a roost entrance (K. Navo, Colorado Division of Wildlife, personal communication; Humphrey and Kunz 1976). Roost sites are usually on ceilings or walls, often at heights below 3 m (Perkins 1990*a*, Pierson and Rainey 1996). *C. townsendii* is considered a sedentary species with movements typically less than 30 km (Humphrey and Kunz 1976, Wackenhut 1990). Long-term banding studies by Pearson et al. (1952) have shown that nursery colony groups are stable, with individuals showing great fidelity to both their group and chosen roost sites. In light of the many anthropogenic threats to roost sites, roost fidelity itself can be a threat to the species.

C. townsendii appears to arouse frequently from hibernation, move among roost sites in response to changes in microclimatic conditions (Keller unpublished data, Humphrey and Kunz 1976, Kunz and Martin 1982, Bosworth 1994), and may also shift among alternate maternity sites (Pearson et al. 1952). Yet, disturbance at roost sites has contributed substantially to population declines (Humphrey and Kunz 1976, Kunz and Martin 1982, Stihler and Hall 1993, Pierson and Rainey 1996).

Population Ecology.--Females give birth to 1 young per year (Pearson et al. 1952). Mortality is high among juveniles. The number of yearling females returning to their natal roost after their first winter averages 38-54%. They have about an 80% survival rate in succeeding years (Pearson et al. 1952). Undisturbed *C. townsendii* populations tend to remain stable (Pearson et al. 1952). The average age of animals in a population is 5 years (Pearson et al. 1952), although Perkins (1994) has a band recovery of an individual >21 years old. Low reproductive potential, high longevity, and high roost fidelity make *C. townsendii* populations highly sensitive to roost threats.

Baker and Patton (1967) have noted that the genetics of this species is very conservative. It is unclear what the effect of sedentary behavior has on gene flow and diversity.

Habitat Threats.--The loss of caves and mines to natural erosion has been suggested as a possible threat to *C. townsendii* populations. However, these losses appear to happen over the span of decades and/or centuries rather than months or years and likely provide adequate time for populations to adjust.

Predation.--The impact of predation on *C. townsendii* populations is largely unknown, but unlikely to be significant (Pearson et a1.1952). Tolin (1994) reports unpublished observations (Stihler, Hall) of predation on *C. t. virginianus* by a black rat snake (*Elaphe obsoleta*) in West Virginia and by a spotted skunk (*Spilogale putorius*) in Virginia. Pearson et al. (1952) recorded observations of house cats (*Felis catus*) carrying dead *C. townsendii* individuals in California. Predation by black rats (*Rattus rattus*) has been documented on a building-dwelling maternity colony in coastal California (Fellers unpublished data). Altenbach (1994) found ringtails preyed on this species as they flew through a restricted opening at the Mariscal Mercury Mine, Big Bend National Park, Texas.

Predation, interspecific competition, and disease do not appear to be significant factors in the maintenance of *C. townsendii* populations.

LITERATURE CITED

Altenbach, S. 1994. Evaluation of bat habitat and occupancy of the Mariscal Mercury Mine Complex and Rio Grande Village Adit, Big Bend National Park, Texas. Big Bend National Park 1993 Research Newsletter.

Bain, J. R. 1988. Management recommendations for a nursery colony of Townsend's big-eared bat, *Plecotus townsendii*, in the Last Chance Mine, Horseshoe Mesa, Grand Canyon National Park, Arizona. Report to National Park Service, Grand Canyon National Park, and Arizona Game and Fish, Phoenix, Arizona.

_____, and H. Bodenhauser. 1986. Status of the nursery colony of Townsend's big-eared bat, *Plecotus townsendii*, in Stanton's Cave, Marble Canyon, Arizona. Report to National Park Service, Grand Canyon National Park, and Arizona Game and Fish, Phoenix, Arizona.

Baker, R. J., and J. L. Patton. 1967. Karotypes and karyotypic variation of North American vespertilionid bats. Journal of Mammalogy 48:270-286.

Barbour R. W., and W. H. Davis. 1969. Bats of America. University Press, Lexington, Kentucky, USA.

Barclay, R. M. R, and R. M. Brigham, editors. 1996. Bats and Forests Symposium. Research Branch, British Columbia Ministry of Forests, Victoria, B.C.

Bell, G. P. 1980. Habitat use and response to patches of prey by desert insectivorous bats. Canadian Journal of Zoology 58:1876-1883.

Belwood, J. J., and R. J. Waugh. 1991. Bats and mines: abandoned does not always mean empty. Bats 9(3):13-16.

Berry, R. D., and P. E. Brown. 1995. Natural history and reproductive behavior-of the California leaf-nosed bat (*Macrotus californicus*). Bat Research News 36:49-50.

Bosworth, W. R. 1994. Characteristics of winter activity in *Plecotus townsendii* in southeastern Idaho. Thesis, Idaho State University, Pocatello, Idaho, USA.

Brown, P. E. 1995. Impacts of renewed mining in historic districts and mitigation for impacts on bat populations. Pages 138-140 *in* B. R. Riddle, editor. Inactive mines as bat habitat guidelines for research, survey, monitoring and mine management in Nevada. Biological Research Center, University of Nevada, Reno, Nevada, USA.

_____, and R. D. Berry. 1991. Bats: habitat, impacts and mitigation. Pages 26-30 *in* Proceedings of the Thorne Ecological Institute: issues and technology in the management of impacted wildlife. Snowmass, Colorado, USA.

_____, _____, and C. Brown. 1993. Bats and mines: finding solutions. Bats (2):12-13.

_____, _____, and_____. 1994. Foraging behavior of Townsend's big-eared bats (*Plecotus townsendii*) on Santa Cruz Island. Pages 367-369 *in* W. L. Halvorson and G. J. Maender, editors. Fourth California Islands Symposium, Santa Barbara Museum of Natural History, Santa Barbara, California, USA.

Burford, L. S., and M. J. Lacki. 1995. Habitat use by *Corynorhinus townsendii virginianus* in the Daniel Boone National Forest. American Midland Naturalist 134:340-345.

_____, and _____. 1998. Moths consumed by *Corynorhinus townsendii virginianus* in Eastern Kentucky. American Midland Naturalist 139:141-146.

Burland, T. M., E. M. Barratt, and P. A. Racey. 1998. Isolation and characterization of micro satellite loci in the brown long-eared bat, *Plecotus auritus*, and-cross-species amplification within the family. Vespertilionidae Molecular Ecology 7:136-138.

Cahalante, V. H. 1939. Mammals of the Chiricahua Mountains, Cochise County, Arizona. Journal of Mammalogy 20:418-440.

Christy, R. E., and S. D. West. 1993. Biology of bats in Douglas-fir forests. U.S. Forest Service, Pacific Northwest Research Station, General Technical Report PNW-GTR-308. Portland, Oregon, USA.

Clark, B. K., and B. S. Clark. 1997. Seasonal variation in use of caves by the endangered, Ozark big-eared bat (*Corynorhinus townsendii ingens*) in Oklahoma. American Midland Naturalist 137:388-392.

_____, _____, D. M. Leslie, and M. S. Gregory. 1996. Characteristics of caves used by the endangered Ozark big-eared bat. Wildlife Society Bulletin 24:8-14.

Clark, D. R. 1981. Bats and environmental contaminants: a review, U.S. Fish and Wildlife Service, Special Scientific Report Number 235:1-27.

_____. 1988. How sensitive are bats to insecticides? Wildlife Society Bulletin 16:399-403.

_____, and R. L. Hothem. 1991. Mammal mortality at Arizona, California and Nevada gold mines using cyanide extraction. California Fish and Game 77:61-69.

_____, D. M. Leslie, and T. S. Carter. 1993. Foraging activity of adult Ozark big-eared bats (*Plecotus townsendii ingens*) in summer. Journal of Mammalogy 74:422-427.

Cockrum, E. L., and S. P. Cross. 1964. Time of bat activity over water holes. Journal of Mammalogy 45:635-636.

Commissaris, L. R. 1961. The Mexican big-eared bat in Arizona. Journal of Mammalogy 42:61-65.

Cross, S. P. 1976. A survey of bat populations and their habitat preferences in southern Oregon. Report to the Nationa1Science Foundation. Southern Oregon State College, Asland, Oregon, USA.

_____, and D. Waldien, 1994. Inventory and monitoring of bats on the Medford District of BLM in 1992. Unpublished Report to Medford District Bureau of Land Management, Medford, Oregon, USA.

Dalquest, W. W. 1947. Notes on the natural history of the bat *Corynorhinus rafinesquii* in California. Journal of Mammalogy 28:17-30.

Dalton, V. M., V. Brack, Jr., and P. M. McTeer. 1986. Food habits-of the big-eared bat, *Plecotus townsendii virginianus*, in Virginia. Virginia Journal of Science 37:248-254.

_____, _____, and C. Williams. 1989. Foraging ecology of the Virginia big-eared bat: performance report. Unpublished Report. Virginia Division of Game, Richmond, Virginia, USA.

_____, and D. C. Dalton. 1994. Roosting use of Agua Caliente Cave by the big-eared bat (*Plecotus townsendii*) and California leaf-nosed bat (*Macrotus californicus*). Unpublished Report. Arizona Department of Game and Fish, Phoenix, Arizona, USA.

Dobkin, D. S., R. G. Gettinger, and M. G. Gerdes. 1995. Springtime movements, roost use, and foraging activity of Townsend's big-eared bat (*Plecotus townsendii*) in central Oregon. Great Basin Naturalist 55:315-321.

Doering, R. W. 1996. The thermal implications of roost site selection in hibernating *Plecotus townsendii*. Thesis, Idaho State University, Pocatello, Idaho, USA.

Dyck, A., and J. M. Perkins. 1984. Habitat use by nine bat species. Paper presented to Oregon Chapter of Wildlife Society.

Easterla, D. A. 1966. Yuma myotis and fringed myotis in southern Utah. Journal of Mammalogy 47:350-351.

_____. 1973*a*. Ecology of the 18 species of Chiroptera at Big Bend National Park, Texas, Part I. Northwest Missouri State University Studies 34:1-53.

_____. 1973*b*. Ecology of the 18 species of Chiroptera at Big Bend National Park, Texas, Part II. Northwest Missouri State University Studies 34:54-165.

Eisler, R. 1991. Cyanide hazards to fish, wildlife, and invertebrates: a synoptic review. U.S. Fish and Wildlife Service, Biological Report 85 (1.23) and Contaminant Hazard Reviews Report 23.

Esmoil, B. J., and S. H. Anderson. 1995. Wildlife mortality associated with oil pits in Wyoming. Prairie Naturalist 27:81-88.

Fellers, G. M., and E. D. Pierson. Habitat use and foraging behavior of Townsend's big-eared bat (*Corynorhinus townsendii*) in coastal California. In prep.

Findley, J. S., and N. C. Negus. 1953. Notes on the mammals of the Gothic region, Gunnison County, Colorado. Journal of Mammalogy 34:235-239.

_____, E. H. Studier, and D. E. Wilson. 1972. Morphologic properties of bat wings. Journal of Mammalogy 53:428-444.

Flickinger, E. L., and C. M. Bunck. 1987. Number of oil-killed birds and fate of bird carcasses at crude oil pits in Texas. Southwestern Naturalist 32:377-382.

Frost. D. R., and R. M. Timm. 1992. Phylogeny of plecotine bats (Chiroptera: "Vespertilionidae"): Summary of the evidence and proposal of a logically consistent taxonomy. American Museum Novitates 3034:1-16.

Genter, D. L. 1986. Wintering bats of the upper Snake River plain: occurrence in lava-tube caves. Basin Naturalist 46:241-244.

Gellman, S. T., and W. J. Zielinski. 1993. Monitoring bat use of old growth redwood forests: preliminary results and a proposal for future work. Northwest Science 67:129.

Graham, R. E. 1966. Observations on the roosting habits of the big-eared bat, *Plecotus townsendii*, in California limestone caves. Cave Notes 8:17-22.

Griffin, D. R. 1958. Listening in the dark. Yale University Press, New Haven, Connecticut, USA.

_____, J. J. G. McCue, and A. D. Grinnell. 1963. The resistance of bats to jamming. Journal of Experimental Zoology 152:229-250.

Hall, E. R. 1981. The mammals of North America. Second edition. J. Wiley and Sons, New York, New York, USA.

Hall, J. S. 1963. Plecotus in West Virginia. Bat Banding News 4:21.

Hall, J. 1994. Trapping bat images. Chiropteran 5:1-5.

Handley, C. O. Jr. 1959. A revision of American bats of the genera *Euderma* and *Plecotus*. Proceedings of the U.S. National Museum 110:95-246.

Hardy, R. 1941. Some notes on Utah bats. Journal of Mammalogy 22:289-295.

Hayward, B., and R. Davis. 1964. Flight speeds in western bats. Journal of Mammalogy 45:236-242.

Hensley, S., and C. Scott. 1993. Ozark big-eared bat, *Plecotus townsendii ingens* (Handley), revised recovery plan. U.S. Fish and Wildlife Service Region 2, Albuquerque, New Mexico, USA.

Howell, A. B. 1920. Some Californian experiences with bat roosts. Journal of Mammalogy 1:169-177.

Humphrey, S. R., and J. B. Cope. 1976. Population ecology of the little brown bat, *Myotis lucifugus*, in Indiana and north-central Kentucky. Special Publication, American Society of Mammalogists 4:1-81.

_____, and T. H. Kunz. 1976. Ecology of a Pleistocene relict, the western big-eared bat (*Plecotus townsendii*), in the southern Great Plains. Journal of Mammalogy 57:470-494.

Jones, C. 1965. Ecological distribution and activity periods of bats of the Mogollon Mountains area of New Mexico and adjacent Arizona. Tulane Studies in Zoology 12:93-100.

_____, and R. D. Suttkus. 1972. Notes on netting bats for eleven years in western New Mexico. Southwestern Naturalist 16:261-266.

Keller, B. L. 1994. The status or bat populations in the Craig Mountain Area, Nez Perce County, Idaho. Unpublished Report, Idaho Department of Fish and Game, Boise, Idaho, USA.

_____, and R. T. Saathoff. 1995. A survey of day roosting by *Plecotus townsendii* in lava-tube caves at Craters of the Moon National Monument, Butte County, Idaho. Unpublished Report, National Park Service, Arco, Idaho, USA.

Koopman, K. F. 1993. Order Chiroptera. Pages 137-242 *in* D. E. Wilson and D. M. Reeder, editors. Mammal species of the world. Smithsonian Institution Press, Washington, D.C., USA.

Kunz, T. H., and R. A. Martin. 1982. *Plecotus townsendii*. Mammalian Species 175:1-6.

Lacki, M. J., M. D. Adam, and L. G. Shoemaker. 1993. Characteristics of feeding roosts of Virginia big-eared bats in Daniel Boone National Forest. Journal of Wildlife Management 57:539-543.

_____, _____, and _____. 1994. Observations on seasonal cycle, population patterns and roost selection in summer colonies of *Plecotus townsendii virginianus* in Kentucky. American Midland Naturalist 131:34-42.

Lange, W. H. 1979. Aquatic and semi-aquatic Lepidoptera. Pages 187-20 *in* Merritt and Cummins, editors. Aquatic insects of North America. Kendall/Hunt. Dubuque, Iowa, USA.

Lewis, L. 1994. Assessment of bat inventory and monitoring data in the Shoshone District BLM. Unpublished Report, Bureau of Land Management, Shoshone District, Shoshone, Idaho, USA.

Marcot, B. G. 1984. Winter use of some northwestern California caves by western big-eared bats and long-eared myotis. Murrelet 65:46.

McCracken, G. F. 1988. Who's endangered and what can we do? Bats 6(3):5-9.

Mohr, C. E. 1972. The status of threatened species of cave-dwelling bats. Bulletin of the National Speleological Society 34:33-37.

Nagorsen, D. W., and R. M. Brigham. 1993. Bats of British Columbia. University of British Columbia, Vancouver, B.C.

Nevada Mining Association, Nevada Department Minerals, and Nevada Department of Wildlife, editors. 1990. Proceedings of the Nevada wildlife/mining workshop. Nevada Mining Association, Reno, Nevada, USA.

Paradiso, J. L., and A. M. Greenhall. 1967. Longevity records for American bats. American Midland Naturalist 78:251-252.

Pearson, O. P., M. R. Koford, and A. K. Pearson. 1952. Reproduction of the lump-nosed bat (*Corynorhinus rafinesquei*) in California. Journal of Mammalogy 33:273-320.

Perkins, J. M. 1983. Bat survey of western Oregon: Coos, Lane, Douglas Counties, in relation to habitat type and age class. Unpublished Report, Oregon Department of Fish and Wildlife, Portland, Oregon, USA.

_____. 1990*a*. Results of Lava Beds National Monument cave surveys in relation to resident bat species, with emphasis on *Plecotus townsendii*. Unpublished Report, Lava Beds National Monument, Tule Lake, California, USA.

_____. 1990*b*. Results of population monitoring for category 2 species, *Plecotus townsendii*, in Oregon and Washington, 1989-1990. Unpublished Report, Oregon Department of Fish and Wildlife, Portland, Oregon, USA.

_____. 1991. *Plecotus townsendii*: survey for the North Umpqua Ranger District of the Umpqua National Forest. Unpublished Report, U.S. Forest Service, Roseburg, Oregon, USA.

_____. 1994. Longevity records in two vespertilionids. Bat Research News 35:79-80.

_____, and C. E. Levesque. 1987. Distribution, status and habitat affinities of Townsend's big-eared bat (*Plecotus townsendii*) in Oregon. Oregon Department of Fish and Wildlife Technical Report 86-6-01, Portland, Oregon, USA.

_____, and T. Schommer. 1991. Survey protocol and an interim species strategy for *Plecotus townsendii* in the Blue Mountains of Oregon and Washington. Unpublished Report, Wallawa-Whitman National Forest, Baker, Oregon, USA.

_____, J. R. Peterson, and A. J. Perkins. 1994. Roost selection in hibernating *Plecotus townsendii*. Bat Research News.35:110.

Perlmeter, S. I. 1996. Bats and bridges: patterns of night roost activity in the Willamette National Forest. Pages 132-150 *in* R. M. R. Barclay and M. R. Brigham, editors. Bats and Forest Symposium. Research Branch, British Columbia Ministry of Forests, Victoria, B.C.

Peterson, J. R., and J. M. Perkins. 1994. Maternity roost distribution on a managed forest, as determined by mist-netting. Bat Research News 35:110.

Pierson, E. D. 1988. The status of Townsend's big-eared bat in California: preliminary results 1987-1988. Unpublished Progress Report, Wildlife Management Division, California Department of Fish and Game, Sacramento, California, USA.

_____. 1989. Help for Townsend's big-eared bats in California. Bats 7(1):5-8.

_____, and P. E. Brown. 1992. Saving old mines for bats. Bats 10(4):11-13.

_____, and G. M. Fellers. 1994. Injuries to *Plecotus townsendii* from lipped bands. Bat Research News 34:89-91.

_____, and _____. 1998. Distribution and ecology of the big-eared bat, *Corynorhinus* (= *Plecotus*) *townsendii* in California. Unpublished Report, U.S. Geological Survey, Biological Resources Division, Species at Risk Program, Reston, Virginia, USA.

_____, and W. E. Rainey. 1991. The importance of mines as roosting habitat for bats: *Plecotus townsendii* in California. Bat Research News 32:83.

_____, and _____. 1993. Bat surveys: Yosemite Valley and Hetch Hetchy Reservoir, July 1993. Unpublished Report, National Park Service, Yosemite National Park, USA.

_____, and _____. 1996. The distribution, status and management of Townsend's big-eared bat (*Corynorhinus townsendii*) in California. California Department of Fish and Game, Bird and Mammal Conservation Program Report 96-7, Sacramento, California, USA.

_____, _____, and D. M. Koontz. 1991. Bats and mines: experimental mitigation for Townsend's big-eared bat at the McLaughlin mine in California. Pages 31-42 *in* Proceedings of the Thorne Ecological Institute: issues and technology in the management of impacted wildlife. Snowmass, Colorado, USA.

Ports, M. A., and P. V. Bradley. 1996. Habitat affinities of bats from northeastern Nevada. Great Basin Naturalist 56:48-53.

Rainey, W. E., E. D. Pierson, M. Colberg, and J. H. Barclay. 1992. Bats in hollow redwoods: seasonal use and role in nutrient transfer into old growth communities. Bat Research News 33:71.

_____, and _____. 1996. Cantara spill effects on bat populations of the upper Sacramento River, 1991-1995. Unpublished Report, California Department of Fish and Game, Redding, California, USA.

Riddle, B. R., editor. 1995. Inactive mines as bat habitat: guidelines for research, survey, monitoring and mine management in Nevada. Biological Research Center, University of Nevada, Reno, Nevada, USA.

Rippy, C. L., and M. J. Harvey. 1965. Notes on *Plecotus townsendii virginianus* in Kentucky. Journal of Mammalogy 46:499.

Roberts, G., and A. Roberts. 1993. Biodiversity in the Caribo-Chilcotin grasslands. Unpublished Report, British Columbia Ministry of Environment, Lands and Parks, Wildlife Branch, Williams Lake, B.C.

Ross, A. 1967. Ecological aspects of the food habits of insectivorous bats. Proceedings of the Western Foundation of Vertebrate Zoology 1:205-263.

Sample, B. E., and R. C. Whitmore. 1993. Food habits of the endangered Virginia big-eared bat in West Virginia. Journal of Mammalogy 74:428-435.

_____, L. Bolter, C. Zivkovich, and R. C. Whitmore. 1993*a*. Evaluation of *Bacillus thuringiensis* and defoliation effects on native Lepidoptera. Appalachian Integrated Pest Management, U.S. Forest Service. AIPM Technology Transfer, Washington, D.C., USA.

_____, _____, and R. C. Whitmore. 1993*b*. Effects of an operational application of Dimilin on nontarget insects. The Canadian Entomologist 125:173-179.

Scheffer, T. H. 1930. Bat matters. Murrelet 11:11-13.

Schmidly, D. J. 1991. The bats of Texas. Texas A & M University Press, College Station, Texas, USA.

_____, K. T. Wilkins, R. L. Honeycutt, and B. C. Weynand. 1977. The bats of east Texas. Texas Journal of Science 28:127-143.

Senger, C., R. Senger, D. Senger, and S. Senger. 1972. Notes on the bat *Plecotus townsendii* in western Washington. Murrelet 53:10-11.

Sherwin, R. E., D. Stricklan, and D. S. Rogers. In Press. Habitat and roosting affinities of Townsend's big-eared bat (*Corynorhinus townsendii*) in northern Utah. Journal of Mammalogy.

Shoemaker, L. G., and M. J. Lacki. 1993. Selection of lepidopteran prey by *Plecotus townsendii virginianus* in the Daniel Boone National Forest of Kentucky. Bat Research News 34:128.

Silva, M. A. 1988. Cyanide heap leaching in California. California Geology, July:147-156.

Soulages, R. 1966. A preliminary survey of eastern Nevada bat caves. Unpublished Report, Great Basin Grotto, National Speleological Society, Reno, Nevada, USA.

Stager, K. 1939. Status of *Myotis velifer* in California, with notes on its life history. Journal of Mammalogy 20:225-228.

Stebbings, R. E. 1966. Bats under stress. Studies in Speleology 1:168-173.

Stihler, C. W., and J. S. Hall. 1993. Endangered bat populations in West Virginia caves gated or fenced to reduce human disturbance. Bat Research News 34:130.

Szewczak, J. M., S. M. Szewczak, M. L. Morrison, and L. S. Hall. 1998. Bats of the White and Inyo Mountains of California-Nevada. Great Basin Naturalist 58:66-75.

Tigner, J., and W. C. Aney. 1994. Report of Black Hills bat survey. Unpublished Report, Black Hills National Forest, Custer, South Dakota, USA.

Tipton, V. M. 1983. Activity patterns of a maternity colony of *Plecotus townsendii virginianus*. Bat Research News 24:56-57.

_____. 1984. Evidence of movement of a maternity colony of *Plecotus townsendii virginianus* throughout the summer. Virginia Journal of Science 35:90.

Tolin, W. A. 1994. Virginia big-eared bat (*Plecotus townsendii virginianus*) recovery plan. U.S. Fish and Wildlife Service Region 5, Hadley, Massachusetts, USA.

Tumlison, R., and M. Douglas. 1992. Parsimony analysis and phylogeny of the plecotine bats (Chiroptera: Vespertilionidae). Journal of Mammalogy 73:276-285.

Turner, R. W., and J. K. Jones, Jr. 1968. Additional notes on bats from western South Dakota. Southwestern Naturalist 13:444-458.

Tuttle, M. D. 1979. Status, cause of decline, and management of endangered gray bats. Journal of Wildlife Management 43:1-17.

_____. 1991. How North American bats survive the winter. Bats 9(3):7-12.

Twente, J. W. 1955. Some aspects of the habitat selection and other behavior of cavern-dwelling bats. Ecology 36:706-732.

Utah Division of Wildlife Resources. 1980. Bats of Utah. Utah Department of Natural Resources, Division of Wildlife Publication Number 80-15.

Wackenhut, M. C. 1990. Bat species over-wintering in lava-tube caves in Lincoln, Gooding, Blaine, Bingham, and Butte Counties, Idaho. Thesis, Idaho State University, Pocatello, Idaho, USA.

Western Bat Working Group. 1998. Western bat species: regional priority matrix. Western Bat Working Group Workshop, 9-13 February 1998, Reno, Nevada.

Whitaker, J. O., Jr., C. Maser, and L. E. Keller. 1977. Food habits of bats of western Oregon. Northwest Science 51:46-55.

_____, _____, and S. P. Cross. 1981. Food habits of eastern Oregon bats, based on stomach and scat analyses. Northwest Science 55:281-292.

Whitlow, W. B., and E. R. Hall. 1933. Mammals of the Pocatello Region of southeastern Idaho. University of California Publications in Zoology 40:235-276.

Williams, D. F., J. D. Druecker, and H. L. Black. 1970. The karyotype of *Euderma maculatum* and comments on the evolution of the plecotine bats. Journal of Mammalogy 51:602-606.

CONSERVATION STRATEGY FOR TOWNSEND'S BIG-EARED BAT

(*Corynorhinus townsendii townsendii* and *Corynorhinus townsendii pallescens*)

INTRODUCTION

C. townsendii is distributed over a broad geographic range in the western United States. Local populations, apparently abundant historically, appear to have declined dramatically. Thorough analysis of past and current distribution of this species is necessary to maintain existing populations in critical areas and to reestablish populations and habitat in areas where the populations are extirpated or diminished.

GOAL

Identify, protect and restore important habitats and viable *C. townsendii* populations throughout the species' range in Idaho and the rest of the western United States.

STANDARDS

The following standards will be followed.

Management of Abandoned Mines

M - 1. All abandoned mines on public land and public funded closures on private lands must receive proper evaluation as bat habitat prior to closure (Appendix A).

M - 2. Roost sites must receive protection consistent with the goal of this conservation strategy. Where gates are used to protect roost sites, they will be designed according to guidelines in Appendix B.

M - 3. Agencies will work cooperatively with private landowners of abandoned mines to conserve *C. townsendii* populations.

Management of Caves

C - 1. State and federal land management agencies and local cave groups (grottos) will work cooperatively to identify caves that either currently support, or have historically supported, hibernating bat populations, maternity roosts, and/or other significant bat roosts. The Federal Cave Resources Protection Act of 1988 will be used for guidance in management decisions.

C - 2. Implement visitor use restrictions seasonally to protect *C. townsendii* populations during critical time periods. Close caves used for hibernacula to recreational visitor use from 1 November - 1 April, and close nursery caves from 1 April - 1 October. The critical time periods of hibernation and maternity activity may vary regionally and will be determined by a qualified biologist. This may allow some site specific flexibility in seasonal closures.

> a. Use a mix of strategies to protect bat populations depending on the particular cave. This mix of strategies includes gating (Appendix B), public education/outreach, law enforcement, area/trail/road closures, and visitor use management. Visitor use strategies will be implemented in coordination with cave user groups where appropriate.

C - 3. Agencies will work cooperatively with private landowners of caves to conserve *C. townsendii* populations.

C - 4. The location of caves used by *C. townsendii* will only be available to the administering agency and the state Conservation Data Center (CDC) or Natural Heritage Program (NHP). Use the Federal Cave Resources Protection Act to exempt the release of cave locations from the Freedom of Information Act.

C - 5. Agencies will officially request that U.S. Geological Survey (USGS) omit cave locations other than commercial caves from revised 7.5-minute topographic maps. Agencies will remove cave locations from maps, brochures, and informational flyers distributed to the public.

C - 6. Interact with local caving clubs to encourage confidentiality of caves used by *C. townsendii* and support of agency management goals.

C - 7. Agencies will develop interpretive brochures and slide/video programs about caves deemed appropriate for general public use. Public inquiries about caving will be directed to local caving organizations for training and guidance.

Renewed Mining at Historical Mine Sites

R - 1. All historical mine workings must be evaluated as bat habitat according to the protocol (Appendix A).

R - 2. If bat use occurs, conduct surveys of adjacent vegetation and water sources to determine significance to local bat populations.

R - 3. Protect existing bat roosts and associated habitats.

R - 4. When roost, water source, or forage area sites are to be eliminated or modified, identify and protect suitable replacement habitat in the immediate area that will provide for all life stages of displaced bats.

Toxic Material Impoundments

T - 1. Eliminate threats to *C. townsendii* resulting from chemical impoundment (i.e., cyanide ponds and oil reserve pits).

T - 2. Eliminate threats to *C. townsendii* resulting from cyanide ponding on heap leach piles.

T - 3. Provide *C. townsendii* clean water a1tematives adjacent to areas where toxic fluids are being impounded.

The standards for pesticide spraying, vegetation conversion, and timber harvest provide interim guidance to managers. They are based on current information and may be refined as new information supports changes to these standards consistent with the conservation of this species.

Pesticide Spraying

P - l. Identify all *C. townsendii* roosts within potential spray blocks.

P - 2. Survey potential spray blocks for additional *C. townsendii* roosts.
P- 3. Intensify target insect sampling to decrease spray block size.

P - 4. Implement management guidelines for protection of riparian and wetland habitats. In determining buffer zones (no spray), consideration should be given to application method and potential for spray drift.

P - 5. Utilize 2-mile radius buffer zone around all *C. townsendii* roost sites.

P - 6. Within a l0-mi1e radius of known roost sites strip spray 0.25 mile strips.

The following additional standards will be implemented:

Rangeland:
a. Utilize species-specific control measures when available (e.g., Nosema, specific biological controls)

Forest:
a. Use silviculture strategies where applicable to reduce the amount of susceptible hosts and to reduce the need to practice direct suppression/spraying.

b. Utilize species-specific control measures as opposed to nonspecific measures where applicable:

i. Gypsy moth: pheromone confusants, Gypcheck (not commercially available yet), mass trapping, sterile male release, parasite/predator release.

ii. Douglas-fir tussock moth: TM biocontrol, pheromone confusants.

In general, these have been shown to be effective only when defoliator populations are very low.

Vegetative Conversions

V - 1. Maintain or improve riparian and wetland habitats near *C. townsendii* roosts (10-mile radius) to achieve healthy and diverse structure.

V - 2. No prescribed burning or vegetative alteration in shrub-steppe or pinyon/juniper habitats will be conducted within a 1.5 mile radius of *C. townsendii* roost sites. Within the 0.5 mile radius of *C. townsendii* roost sites, no more than half of the forested habitat can be subjected to prescribed burning per decade, and only at a time when the roost is not occupied.

Timber Harvest

H - 1. List and identify *C. townsendii* roost sites within timber sale areas.

H - 2. Survey timber sale areas for additional roosts.

H - 3. Seasonal harvest activities and road building restrictions will be necessary to avoid disturbance to maternity roosts (1 April- 1 October) and hibernacula (1 November - 1 April). The critical time periods of. hibernation and maternity activity may vary regionally and will be determined by a qualified biologist.

This may allow some site specific flexibility in the above dates. When bats are present year round, a 0.25 mile radius buffer zone is necessary.

H - 4. A buffer zone with a minimum 500-foot horizontal radius will be maintained around all roost entrances.

H - 5. Logging roads will be constructed so as to minimize visibility of roost entrances from the road.

Inventory, Monitoring, and Research Protocols

I - 1. Establish permitting requirements for all investigators working with bats. Permits will require training from an experienced bat biologist. Training will include awareness of health and safety precautions for handling bats and working in bat habitats.

I - 2. Guidelines outlined in 1992 Journal of Mammalogy Volume 73(3):707-710 (Appendix C) and subsequent revisions will be followed, with the more specific restrictions outlined below.

I - 3. The most reliable estimates of the number of adult females in a nursery colony is obtained in the spring, 2-3 weeks prior to parturition. Once this time window is determined for a particular colony, counts should be conducted as close to the same date as possible in subsequent years (every year if numbers can be estimated without entering the roost; every other year if roost entry is required).

I - 4. Ideally monitoring of maternity sites should be done by evening exit counts. Since this species exits primarily after dark, night vision equipment is needed to obtain an accurate out-flight count.

I - 5. Acoustic detection can also be utilized by an experienced observer, but would be expected to give a less reliable estimate of colony size than visual observation since *C. townsendii* does not always echolocate upon exodus. Acoustic monitoring, in conjunction with visual counts, would be useful in determining whether multiple species are using the same roost. Acoustic detectors can also be set up to monitor remotely when human observers are not available. For information on other alternative external survey methods see Appendix A.

I - 6. Due to the great sensitivity of this species to disturbance at roost sites, maternity roosts should never be entered unless absolutely necessary, and under no conditions should animals ever be removed from or disturbed in a nursery cluster. If a maternity roost is entered it should be done by no more than 2 people, using night vision equipment or lights covered by red filters, making as little noise as possible. Investigators should never pass directly under a maternity cluster, and should carry equipment in packs and wear clothing that minimize ultrasonic noise (e.g., soft cotton, wool). Colony size can be estimated from a distance by estimating the dimensions of a cluster (about 125 bats per square foot).

I - 7. Any netting or trapping of animals at maternity sites should occur outside the roost and away from the roost entrance.

I - 8. Monitoring of hibernating sites should be kept to a minimum. These sites should not be entered more than once every 2 years unless absolutely necessary. Surveys of hibernating sites should be conducted with the utmost caution and as quickly and quietly as possible. The numbers of people conducting surveys should be limited to the minimum that can safely enter the site. Hibernating animals should not be handled unless absolutely necessary.

I - 9. Due to a history of band-induced injuries, the banding of *C. townsendii* is discouraged.

I - 10. Scientific collection and banding will be limited through the permitting process.

I - 11. Locations of *C. townsendii* roost sites will be treated as sensitive information, with access restricted accordingly.

I - 12. Establish an interagency, interstate working group to continue to consolidate inventory and monitoring information, provide educational materials to biologists, coordinate research, and act as an advisory group to provide assistance or advice to deal with population or habitat problems for *C. townsendii*. At a minimum the preparers of this document will form the initial working group.

INVENTORY AND MONITORING

An active inventory and monitoring program is needed to further identify *C. townsendii* habitat and assure the maintenance of viable populations across the range of this species. Regular population and habitat assessment provide valuable information on causal mechanisms and effects of various disturbances. Inventory and monitoring data should be used to evaluate the success of this conservation strategy and to contribute to an adaptive management program.

Inventory

Abandoned mine and cave inventory for *C. townsendii* will be conducted according to the protocol outlined in Appendices A and C. The same protocol should be used, as applicable, for other types of roosts (e.g., buildings, bridges, and other anthropogenic structures).

Monitoring

It is particularly important to monitor populations in a managed landscape to assess various impacts of land management activities and to evaluate the success of this conservation strategy. Monitoring for *C. townsendii* presence will include: (1) annual or biannual nonintrusive monitoring of selected sites across the species' range, following monitoring guidelines outlined above; (2) 10-year extensive monitoring at all sites; (3) monitoring of sites potentially affected by management actions 1 year before and annually for 3 years after implementation of management activities; and (4) monitoring of selected bat gates for effectiveness and acceptance.

State Status

Encourage individual states to elevate state status of *C. townsendii* when appropriate.

Ecological Research

Although much has been learned about *C. townsendii* in the last decade, a number of management questions remain to be answered. Issues critical to effective management of this species are:

1. Examine the broad range of roost sites used by *C. townsendii* throughout its geographic range, especially in areas where roosts for known populations have yet to be found.

2. Collect data on structural microclimatic roost parameters (e.g., roost location, temperature, and humidity) with the goal of developing predictive screening criteria for roost site evaluation.

3. Foraging ecology:

a. Through radio telemetry, define habitat used by *C. townsendii* for foraging.

b. Through radio telemetry, evaluate responses to land management practices, such as timber harvest and grazing.

c. Develop guidelines to mitigate for any impacts resulting from these activities.

d. Obtain baseline data on the seasonal and temporal activity patterns of insects in bat occupied areas. Baseline insect population data should be collected for several years.

4. Effects of toxic materials:

a. Determine direct and indirect effects of pesticide spraying on *C. townsendii* populations.

b. Determine the effects of contaminants on populations.

APPENDIX A

EVALUATION OF BAT USE IN ABANDONED MINES

Principal Author
1. Scott Altenbach, University of New Mexico

Plecotine Team Revisions
David Genter, Montana Natural Heritage Program

Barry L. Keller, Idaho State University

Kirk Navo, Colorado Division of Wildlife

INTRODUCTION

The need to secure abandoned mines for human safety seems in conflict with the fact that 62% of the bat species of the continental United States are known to roost in mines (Pierson et al. 1991, American Society of Mammalogists 1992, Altenbach and Pierson 1995). In addition, populations of many species have experienced serious declines in recent years (Graham 1966, Mohr 1972, Tuttle 1977, Perkins 1985, Clawson 1987, Pierson and Rainey 1996). It is clear that relatively little is known about basic requirements of many species of bats and that closure of mine roosts could have serious, negative consequences to the species that use them. There is evidence that recreational activities and destruction of habitat have played a major role in this decline and that examples of human-caused mortality at traditional roosts are common (Mohr 1972, Tuttle 1977, Altenbach, unpublished observations). It has become clear that abandoned mines provide a refugium. Because roost requirements differ widely during different times of the year, the timing of surveys is critical and will be discussed in the context of different types of mine survey protocols. Described herein are procedures that have been used in the evaluation of abandoned mines for bat use and occupancy.

While this protocol was written in terms of mine survey and protection, the survey techniques and closure considerations also apply to natural caves. Safety and caving ethics also play a role in cave surveys. Anyone conducting cave surveys for bats should consult with or join a local grotto to stay current with cave safety training and equipment and caving ethics.

Mines can be used by different species of bats with widely differing requirements for temperature, relative humidity and air flow. The use can be for hibernation, intermediate roosting between warm and cold season, migratory stopover, warm season maternity roosting, bachelor colonies, night roosts, and possibly for developmental diapause during the warm season. Mines may provide last-resort habitat for bats displaced from traditional roosts by destruction or disturbance.

Bat biologists have much to learn about roost preference criteria, but numerous observations suggest temperature is an important factor affecting distribution within roosts (Tuttle and Stevenson 1978). The simplicity of a mine may provide seasonal temperature fluctuations just as complexity may provide extreme, regional, internal temperature variation. It is important to consider that nearly any mine may be used by bats at different times of the year. Since it is not possible to determine without looking whether or not a mine is being used by bats, on-site surveys are critical in designing site-specific management.

MINE INVENTORY AND SURVEY PROTOCOL

Inventory and Initial Survey

The initial survey of an inactive mine or group of inactive mines scheduled for closure involves location and description of ALL mine openings (features) (Fig. 1) including: dimensions, elevations relative to other openings, airflow direction and temperature, obstacles in opening (rocks, vegetation, limbs, trash, portal or headframe timbers), potential hazards, depth of the mine feature (vertical or horizontal) as can be observed from outside, presence of drifts as can be observed from outside, observations of any wildlife or wildlife sign (e.g., excrement, carcasses, etc.), and collection, if possible, of potential bat guano from immediately inside the mine opening if safe to do so. In some cases mine maps are available and can give an idea of the size and internal configuration as well as the interconnection of multiple portals and openings. For many older mines, however, no maps may exist. The size of the mine dump may indicate a proportionally high volume of internal workings, but the inverse may not be true.

In an initial survey, a mine can often be eliminated as a possibility for bat habitat. If the rib (side), back (ceiling), and sill (floor) of shallow adits and rib (side) of shallow shafts can be observed clearly enough to determine that no lateral workings are present and no sign of use by bats is seen, it is safe to assume the mine has low potential as bat habitat. If a shaft is flooded above any lateral workings or if an adit is flooded to within a foot of the back (ceiling), even periodically, it can be considered to have low potential as a maternity roost or hibernacula, but it could be important as a night roost or drinking water source.

Even though persons doing external surveys (either initial surveys or external bat surveys) are not required to go underground, they should realize that hazards exist even on the surface around abandoned mines and should have proper training on the hazards and how to avoid or minimize them. Navo (1995) discusses possible levels of training for personnel, as do Perkins and Schommer (1993).

Internal Survey

The subsequent discussion of internal surveys of abandoned or inactive mine workings is provided to illustrate the approach used in internal surveys in mines and to illustrate the extent to which such mines are used by bats. This is not a recommended protocol for others to conduct such surveys, nor is it intended as a complete description. Abandoned or inactive underground mines are not safe to enter, and there is no way they can be made safe. Persons entering them must understand and accept the associated risks. Anyone entering abandoned underground workings must have appropriate training and experience with the associated hazards and with the ways to minimize them. Caving experience does not qualify someone to enter an underground mine.

Safety Equipment Used.-- The MINIMUM safety equipment needed for underground work includes: Approved hard hat with chin strap, 3 sources of MSHA-approved light, gas detector (a combination O_2, CO, combustible Gas), O_2 detector with remote sensor head, oxygen generating self-rescuer, and a respirator. A respirator with filters for particulates and ammonia can be important in some situations, especially where populations of deer mice and wood rats, potentially infected with Hantavirus (Hjelle et al. 1994), may be present. Should extensive dust particles be encountered, approved hepa filter half-face masks may be used.

Figure 1. Typical mine features and terminology. In this example, the highest and lowest temperature air would be trapped at locations A and B respectively.

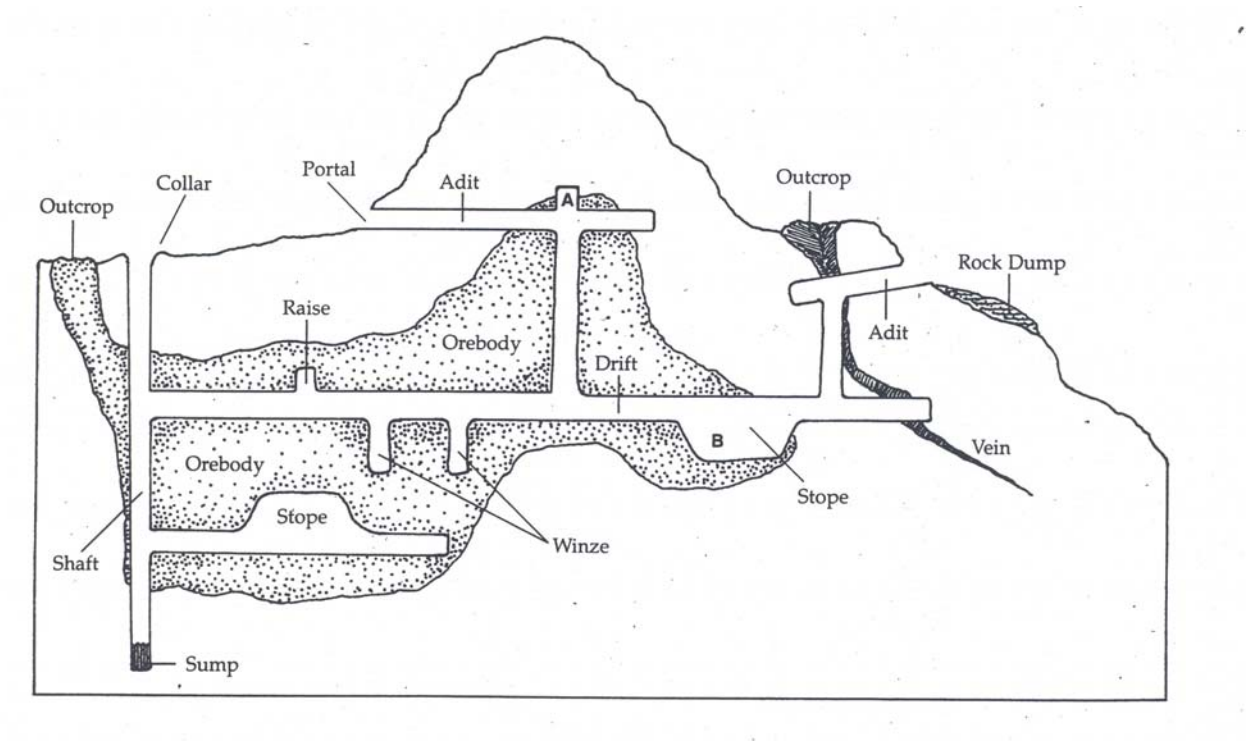

Mining Terminology

Adit - A horizontal mine passage driven from the surface for the working or de-watering of a mine.

Bald Raise - A raise with no drifts or horizontal workings.

Drift - A horizontal underground mine passage following a vein.

Orebody - A mineral deposit that is being mined for its metals.

Outcrop - That part of a stratum or vein that appears on the earth's surface.

Portal - A horizontal mine entrance.

Raise - A vertical or inclined opening driven upward from one mine level to connect with the level above, or used to explore the ground above a level.

Shaft - A vertical mine opening from the surface into a mine.

Stope - An underground cavity made by the removal of ore. An overhand stope is made by working upward from a mine level, and an underhand stope is made by working downward beneath a mine level.

Sump - A hole dug at the bottom of a mine shaft to collect water.

Vein - A fault in the ground that contains valuable minerals.

Winze - A vertical or inclined opening sunk downward from inside a mine for the purpose of connection with a lower level, or for exploring the ground beneath a lower level.

If any vertical climbing is required, the appropriate, specialized equipment and training (as well as practice) in its use is obviously vital. *Vertical climbing in abandoned mines, especially in shafts, is an order of magnitude more dangerous than typical vertical mountaineering practice and is warranted under only rare circumstances.*

If additional survey is warranted, an internal survey, conducted by an experienced bat biologist has proved to be the quickest and least labor/time intensive of the survey options. The leader of any internal survey needs experience with identification of bats and general bat biology as well as with mines, mine safety and hazards peculiar to abandoned or inactive underground workings. This person must make a decision that an internal survey is possible within the limits of safety, must make a decision to abort an internal survey if warranted, and must decide whether an external survey is the only option.

When it is determined that an internal survey is possible, the following approach is one that has been used by the principal author in the cooperative program between the New Mexico Abandoned Mine Lands Bureau and the University of New Mexico. Aspects of this protocol are discussed in greater detail in the following section.

A	*Complete Internal Evaluation Possible*	**B**
A'	*Complete Internal Evaluation Not Possible*	**G**
B	*Cold-Season Survey*	
	No Guano, Sign, or Residents	**F**
	Guano or Other Sign	**C**
	Residents	**C,E**
	Internal Conditions (water) May Obscure Sign	**C**
C	*Warm-Season Survey*	
	No Residents-Night Roost, Migratory Use	**D**
	Residents	**E**
D	*Fall or Spring Survey, Dropping Boards*	
	No Residents, No Additional Sign (Roost Abandoned)	**E,F**
	Residents, Additional Sign	**E**
E	*Decision to Bat Gate Involving Following Questions:*	
	Is a Threatened or Endangered Species Involved?	
	Is Use Significant?	
	Are Alternative Features, Used in the Same Way, Nearby?	
	How Feasible is Bat-compatible Gating?	
	Will Preservation of an Abandoned Roost Provide Habitat or Mitigate Habitat Destruction Elsewhere?	
F	*Closure By Any Means (If possible after a final inspection, mist netting and tarping or smoke bombing before closure)*	
G	*External Survey*	

DISCUSSION OF INTERNAL EVALUATION PROTOCOL

Cold-Season Survey (Key Item B)

During the initial cold-season check, note is made of the layout of the mine and of the possibility that parts of the mine cannot be explored. *C. townsendii* has been found on the rib of deep bald shafts and in deep drifts that act as cold air traps. Such features should not be discounted. If it is determined that parts of a mine cannot be explored, external evaluation of the mine is required. If internal evaluation is possible, careful checking of even tiny cracks or holes in the back and rib is necessary, because some species of bats hibernate in such openings. *C. townsendii*, however, rarely occupies cracks and commonly is visible on the ribs and back of adits and drifts. Measurements of temperature, relative humidity, and airflow in different parts of the mine are made at this time and add to our understanding of the roost requirements for bats and our understanding of how the internal mine environment correlates with external temperatures and conditions.

If bats are encountered in a cold season survey, they may be identified by inspection under red light. Mine and flashlight beams should not be aimed directly on hibernating bats for any length of time, and attempts at identification must be limited to the minimum time possible. Getting exact counts of clustered or scattered bats does not warrant the disturbance involved. A quick estimate of numbers or of the size of a cluster is adequate, and disturbance should be kept at a minimum.

Warm-Season Survey (Key Item C)

Internal surveys during warm season are conducted with extreme care. Many species of bats are intolerant of disturbance at the roost site, especially during the time they are having and caring for pups. Disturbance can easily cause relocation of a colony and, worse, mortality of pups (Mohr 1972, Humphrey and Kunz 1976). A mine is approached, entered and explored quietly during a warm season check. Serious disturbance of alert bats to make an identification is not warranted. An experienced bat biologist can make an identification of some species with a quick glance. If bats cannot be identified without disturbing them, external evaluation involving netting, trapping, or bat detectors is required.

If no bats are found in residence, the bat sign (typically guano pile or scattered guano) can be carefully searched for the discarded invertebrate appendages and wings that indicate night roosting. If night roosting is suspected, the mine is again entered at night to observe the species and numbers involved or is mist netted at night. ***Bats are seldom encountered in mines used as migratory stopover roosts, and identification of the species typically involves a careful search for carcasses that can then be identified Repeated visits to the mine in the time period when use is thought to occur makes encountering and identification of the residents more likely.***

Fall-Spring Surveys (Key Item D)

Fall surveys might document species flocking in preparation for hibernation, and both spring and fall surveys might document bats using a mine feature as a migratory stopover. Maternity use obviously is best detected from mid-May to August, a period during which bachelor colonies may also be detected.

Decision to Bat Gate (Key Item E)

If *C. townsendii* is using a mine, the decision to use some type of bat-compatible closure is clear, but it must involve consultation with appropriate state and/or federal authorities.

The question of how to define "significant use" is difficult. A single, hibernating *C. townsendii* may not be sufficient cause to close a mine with a bat-compatible closure at great expense. Ten hibernating *C. townsendii* probably is, but the decision must be weighed against the complexity, feasibility, cost and reliability of such a closure. It must also be weighed by the presence or absence of a comparable mine feature, used in the same way, being nearby. As an example, a mine in Grant County, New Mexico, was used as a hibernaculum by over 25 *C. townsendii*. The mine was an open stope that averaged about 20 feet in width, was over 100 yards long, and was over 100 feet deep in places. The cost of a bat compatible closure was astronomical, but within a quarter mile was another mine, used by this species as both a hibernaculum and maternity roost, that was much more suitable for a bat-compatible closure. The first feature was blasted shut during the interval between maternity and hibernation time (after clearing with smoke bombs the night before blasting), and the second was fitted with bat-compatible gating on 3 of its entrances and with cable netting on the others to maintain airflow.

A maternity colony of any species is significant and is cause for installation of bat-compatible closure, but such a closure must be weighed against costs, feasibility, and availability of comparable, more easily gated features nearby.

Bat Compatible closure and Follow-up (Key Item F)

If the use is significant or if alternative, comparable sites do not exist nearby and closure is feasible, the mine feature should be closed with bat-compatible gating. The bat-compatible closures are designed for each mine feature by Abandoned Mine Lands (AML) engineers and are typical of those described elsewhere. Secondary openings not used by bats are closed by any means that will permit airflow and deny human entry. If bat use is likely through a secondary opening that is closed by cable netting, angle iron-reinforced openings are provided in the net. After closing in this manner, the feature is checked periodically to assess subsequent use. Remote monitoring and data storage systems can be used to collect data on all aspects of the use of mines that have been closed with bat-compatible closures.

Timing of Mine Closure.-- The selection of appropriate "time windows" for non-bat-compatible closure must minimize the chances that unknown residents will be trapped inside. Installation of bat-compatible closure must likewise be timed to minimize disturbance of residents. These time windows will vary with the type of use, the species present, and the region of the country. Closure activities need to be coordinated with the help of local bat biologists.

External Evaluation Protocol (Key Item G)

Anyone interested in the protocol for external surveys is encouraged to consult Navo (1995), who describes a successful program in Colorado that uses volunteer help in conducting external mine surveys. If a mine or mine complex is deemed a possible bat habitat but cannot be entered because of hazardous conditions or because trained or experienced persons are not available for an internal survey, a series of external surveys is in order. ***The timing of the surveys is critical and depends upon the seasonal changes in bat activity typical of the region in question.*** Publications on the biology of species that might be in a particular area, as well as consultation with local bat biologists, provide a good starting point for planning and timing of external surveys.

Fall surveys (mid-August through mid-October) might encounter species flocking in preparation for hibernation, and both spring (March through mid-May) and fall surveys might encounter bats using a mine feature as a migratory stopover. Maternity use is best detected during June through late-July. Bachelor colonies could also be detected at this time.

Surveys are conducted by observers stationed off to the sides of the mine portal on nights without rain or strong wind. Setup is kept quiet and is complete at least 30 minutes before sunset. Observers are stationed at least 15 feet from the sides of a portal, not directly in front of it. After it is too dark to see bats silhouetted against an evening sky, red lights are shined across the portal, not into it. Night vision devices, although very costly, are superb for observation of mine entrances on dark nights and work best with a supplemental infrared light source. Observations are conducted over a period of at least 2 hours after sunset, and as much information as possible about numbers counted going in or out of the mine is recorded.

All entrances in a particular area are checked, with as many as possible being monitored on the same night. Bats often use only 1 entrance of a mine that may have several, but disturbance at 1 entrance may cause bats to use an alternate portal. An external survey will usually detect bats that are using a mine the night the survey is done, although some bats may not go out on a particular night, particularly if the weather is inclement. Care must be taken in drawing conclusions from a single night survey, particularly if no bats are observed. Negative results on 1 night or in 1 season may not be indicative of the overall significance of the site to bats.

Bat detectors have been used successfully in external evaluation. If possible, broad-band detectors are preferable, but narrow band detectors are suitable if they are scanned to maximize the chances of detecting bats. Typically, one starts with a setting of 35 KHz and scans over the range of 20 to 50 KHz. Knowledge of the echolocation characteristics of local bats is important for identification of the species being detected. Acoustic monitoring can be used by relatively inexperienced observers for initial presence/absence screening. If this method is to be used for species identification, calls should be recorded on a tape recorder or stored in a lap-top computer, and evaluated by someone experienced with identification of echolocation calls (Rainey 1995, O'Farrell et al. 1999).

External Capture Survey

Capture of some individuals for positive identification is warranted if unidentified bats are encountered during a warm season internal survey, if a warm-season external evaluation substantiates the presence of bats, or if a night roost is discovered. Additionally when a night roost is discovered, capture of some individuals for positive identification is warranted. Persons conducting capture surveys must be thoroughly capable of field identification, be rabies immunized, and have necessary state and/or federal collecting permits. Set-up of mist nets or harp traps is completed at least 30 minutes before sunset and is done as quietly as possible. Nets or traps (with someone in attendance at all times) are left up at least 2 hours after sunset, or later if there is a possibility that the mine is used as a night roost. After enough bats have been caught for identification and released, the nets are taken down to minimize disturbance. Data on species, sex, and reproductive status is usually recorded.

Alternative External Survey Possibilities

The possibilities for external surveys (personnel not going underground) are limited only by the imagination, the technological capabilities of the personnel and, unfortunately, the budget. The following are approaches that have been tried as prototypes by persons doing bat surveys, and are suggested as possibilities worth modification and experimentation.

Robotic Video Camera.--A video camera, enclosed in protective case and equipped with a light, has great potential for evaluating shafts. Pete Bradley (Nevada Department of Wildlife, personal communication) has tried lowering a camera on a single tether and has produced a scan of the shaft rib as the camera spins during its descent. David Dalton and Marion Vittetoe (personal communication) have

used the same technique but have used a 4-point suspension of the camera to retain positive control of camera point.

These techniques could be improved by a video link to the surface to allow personnel to see what the camera sees without having to wait for a playback after the camera is pulled to the surface. A control hookup to the camera could allow focus and increase illumination to see into horizontal workings. At a minimum, these techniques offer the possibility to safely evaluate shafts for potential habitat.

Bat detector coupled to data logger.--A bat detector coupled to a data logger allows a nightly survey of a mine portal over an extended period (e.g., each night over a month) without the time expenditure of a survey team. The technique has a good probability of detecting bats entering a mine as a hibernation site.

Automated monitoring systems.--Automated monitoring systems can be very useful when the number of portals exceed the number of available observers, but are most easily adapted to openings that are small or can be temporarily restricted. Several approaches are described by Rainey (1995). Two possibilities are: a battery operated, ID beam breaker-based event recorder and passive far-IR sensors that respond to body heat and movement.

CONCLUSIONS

It appears that, in a mine of any size, there is little to indicate bat use. Significant numbers of bats have been found in deep, single-portal shafts, on the rib of bald shafts, and deep in horizontal features that show absolutely no evidence of bat use in their shallow passages. Another aspect of the unpredictability involves the near impossibility of determining the internal complexity, the number of interconnected openings, and the internal volume of a large mine or mine complex based upon an external evaluation. This unpredictability has been complicated by the observation that many mines that appear to have no warm- or cold-season use, function as short-duration pre- or post-hibernation interim roosts. Mines that are not used for hibernation and have no sign of warm-season use have been occupied by *C. townsendii* when checked in mid-March and September.

LITERATURE CITED

Altenbach, J. S., and E. D. Pierson. 1995. The importance of mines to bats: an overview. Pages 7-18 *in* B. R. Riddle, editor. Inactive mines as bat habitat: guidelines for research, survey, monitoring and mine management in Nevada. Biological Resources Research Center, University of Nevada, Reno, Nevada, USA.

American Society of Mammalogists. 1992. Guidelines for the protection of bat roosts. Journal of Mammalogy 73:707-710.

Clawson, R. L. 1987. Indiana bats: Down for the count. Bats 5:3-5.

Graham. R. E. 1966. Observations on the roosting habitats of the big-eared bat, *Plecotus townsendii*, in California limestone caves. Cave Notes 8:17-22.

Hjelle, B., S. Jenison, G. Mertz, F. Koster, and K. Foucar. 1994. Emergence of hantaviral disease in the southwestern United States. West Journal of Medicine 161:467-473.

Humphrey, S. R., and T. H. Kunz. 1976. Ecology of a Pleistocene relict, the western big-eared bat (*Plecotus townsendii*), in the southern great plains. Journal of Mammalogy 57:470-494.

Mohr, C. E. 1972. The status of threatened species of cave-dwelling bats. Bulletin of the National Speleological Society 34:33-47.

Nave, K. 1995. Guidelines for external surveys of mines for bat roosts. Pages 49-54 *in* B. R. Riddle, editor. Inactive mines as bat habitat: guidelines for research, survey, monitoring and mine management in Nevada. Biological Resources Research Center, University of Nevada, Reno, Nevada, USA.

O'Farrell, M. J., B. W. Miller, and W. L. Gannon. 1999. Qualitative identification of free-flying bats using the anabat detector. Journal of Mammalogy 80:11-23.

Perkins, M. 1985. The plight of *Plecotus*. Bats 2:1-2.

Perkins, M., and T. Schommer. 1993. Survey protocol and the interim species conservation strategy for *Plecotus townsendii* in the Blue Mountains of Oregon. Unpublished Report, Wallowa-Whitman National Forest, Baker City, Oregon, USA.

Pierson, E. D., and W. E. Rainey. 1996. The distribution, status and management of Townsend's big-eared bat (*Corynorhinus townsendii*) in California. California Department of Fish and Game, Bird and Mammal Conservation Program Report 96-7, Sacramento, California, USA.

_____, W. E. Rainey, and D. M. Koontz. 1991. Bats and mines: experimental mitigation for Townsend's big-eared bat at the McLaughlin Mine in California. Pages 31-42 *in* Proceedings of the Thorne Ecological Institute: issues and technology in the management of impacted wildlife. Snowmass, Colorado, USA.

Rainey, W. E. 1995. Tools for low-disturbance monitoring of bat activity. Pages 62-71 *in* B. R. Riddle, editor. Inactive mines as bat habitat: guidelines for research, survey, monitoring and mine management in Nevada. Biological Resources Research Center, University of Nevada, Reno, Nevada, USA.

Tuttle, M. D. 1977. Gating as a means of protecting cave dwelling bats. Pages 77-82 *in* T. Aley and D. Rhodes, editors. Proceedings of the National Cave Management Symposium, Mountain View, Arizona, National Speleological Society, Huntsville, Alabama, USA.

_____, and D. E. Stevenson. 1978. Variation in the cave environment and its biological implications. Pages 108-121 *in* R. Zuber et al., editors. Proceedings of the National Cave Management Symposium, Big Sky, Montana, National Speleological Society, Huntsville, Alabama, USA.

APPENDIX B

DESIGNS FOR BAT GATES

The following designs were taken from: Tuttle, M. D., and D. A. R. Taylor. 1994. Bats and Mines. Resource Publication No.3. Bat Conservation International, Inc.

The plans were provided by the American Cave Conservation Association (ACCA). They are revised annually so contact the ACCA for current construction specifications or for consultation on special needs.

American Cave Conservation Association
P.O. Box 409
Horse Cave, KY 42749
502/786-1466

These designs have been photocopied and included with permission from BCI and ACCA.

Appendix III
Design A

These plans are provided courtesy of the American Cave Conservation Association and are revised annually. Contact the ACCA for current construction specifications or for consultation on special needs (see Appendix II).

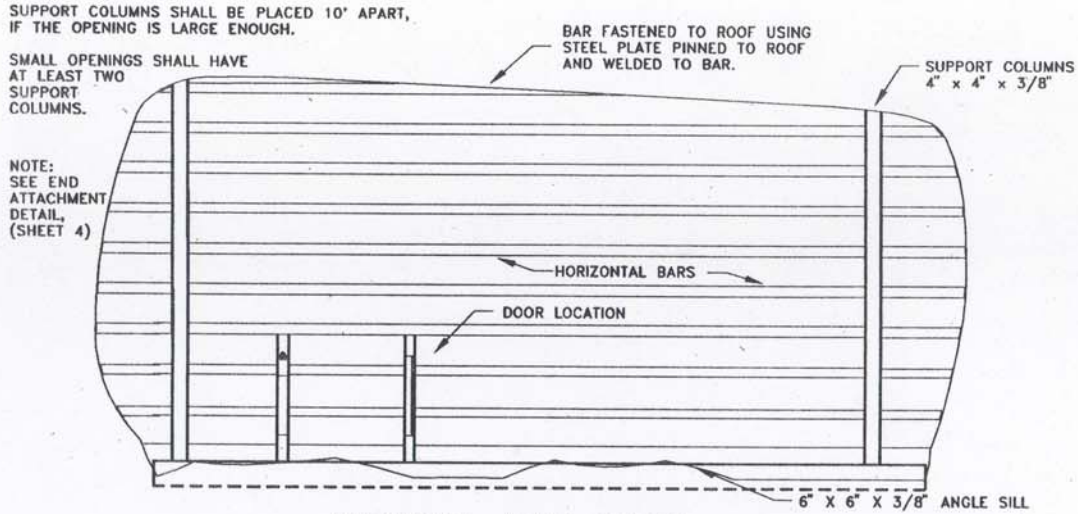

TYPICAL BAT GATE
BACK ELEVATION VIEW

NOT TO SCALE

Page 1 of 6
Designed by R. Powers, Drafted by M. Washburn © American Cave Conservation Association

Appendix III
Design A

These plans are provided courtesy of the American Cave Conservation Association and are revised annually. Contact the ACCA for current construction specifications or for consultation on special needs (see Appendix II).

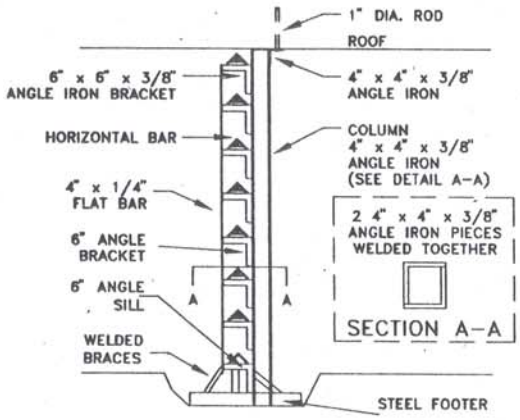

SUPPORT COLUMN

NOT TO SCALE

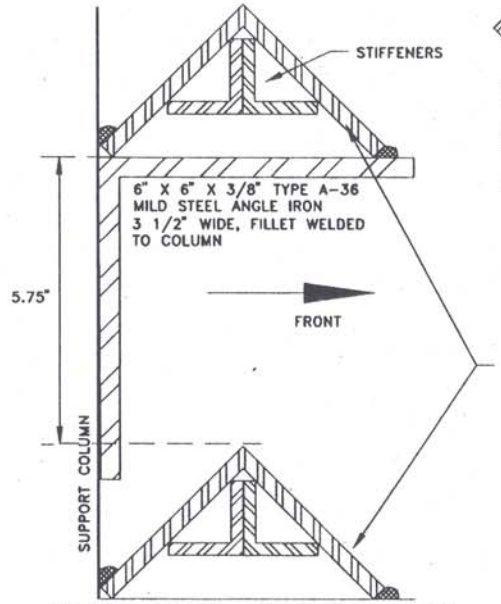

HORIZONTAL BAR SPACING TYPICAL DETAIL

NOT TO SCALE

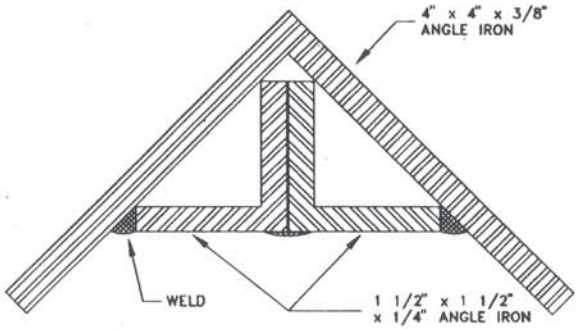

STIFFENERS RUN THE FULL LENGTH OF THE HORIZONTAL BAR

STIFFENERS SHOULD BE CUT 2" SHORTER THAN ANGLE IRON BAR TO FACILITATE TRIMMING THE ENDS TO FIT THE OPENING

STIFFENERS NOT REQUIRED FOR ANGLE IRON BARS LESS THAN 4' LONG

STIFFENER DETAIL
Horizontal Bars

NOT TO SCALE

Page 2 of 6

Designed by R. Powers, Drafted by M. Washburn © American Cave Conservation Association

Appendix III
Design A

These plans are provided courtesy of the American Cave Conservation Association and are revised annually. Contact the ACCA for current construction specifications or for consultation on special needs (see Appendix II).

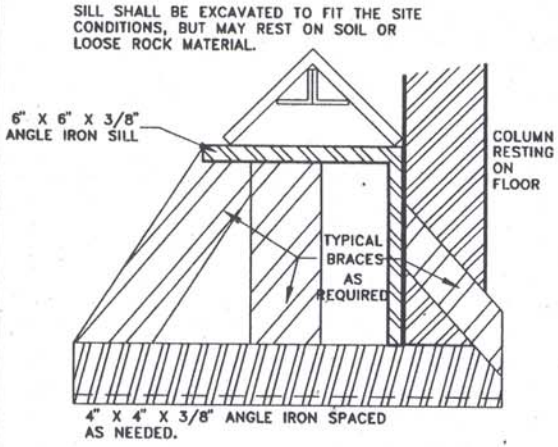

SILL DETAIL 1

NOT TO SCALE

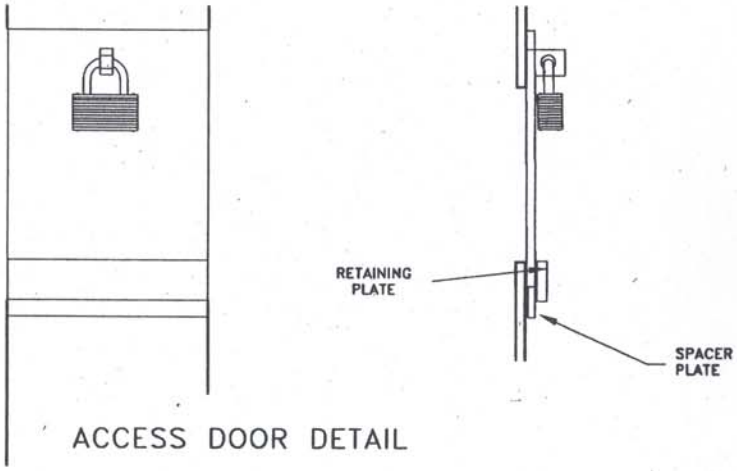

ACCESS DOOR DETAIL

NOT TO SCALE

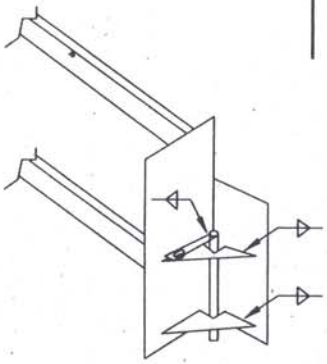

LOCKING MECHANISM DETAIL

NOT TO SCALE

Page 3 of 6

Designed by R. Powers, Drafted by M. Washburn © American Cave Conservation Association

Appendix III
Design A

These plans are provided courtesy of the American Cave Conservation Association and are revised annually. Contact the ACCA for current construction specifications or for consultation on special needs (see Appendix II).

NOTE 1
EACH END SHALL HAVE A MINIMUM OF TWO OF THE BARS ATTACHED TO THE WALL. ATTACHMENTS SHALL BE SPACED AT 25% AND 75% OF THE HEIGHT, AS A GENERAL GUIDELINE.

NOTE 2
END ATTACHMENT MUST BE USED ON BARS WHICH EXTEND MORE THAN 30" BEYOND COLUMNS.

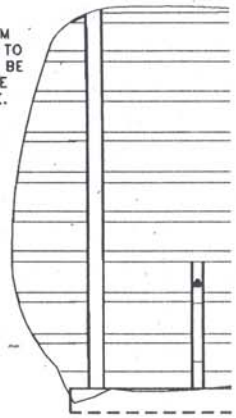

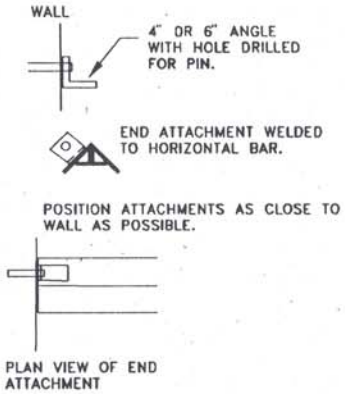

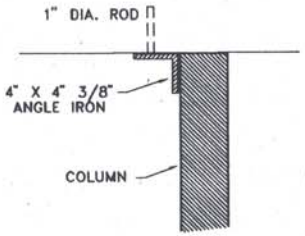

COLUMN ATTACHMENT DETAIL

ATTACHMENT DETAILS

NOT TO SCALE

Page 4 of 6
Designed by R. Powers, Drafted by M. Washburn © American Cave Conservation Association

Appendix III
Design A

These plans are provided courtesy of the American Cave Conservation Association and are revised annually. Contact the ACCA for current construction specifications or for consultation on special needs (see Appendix II).

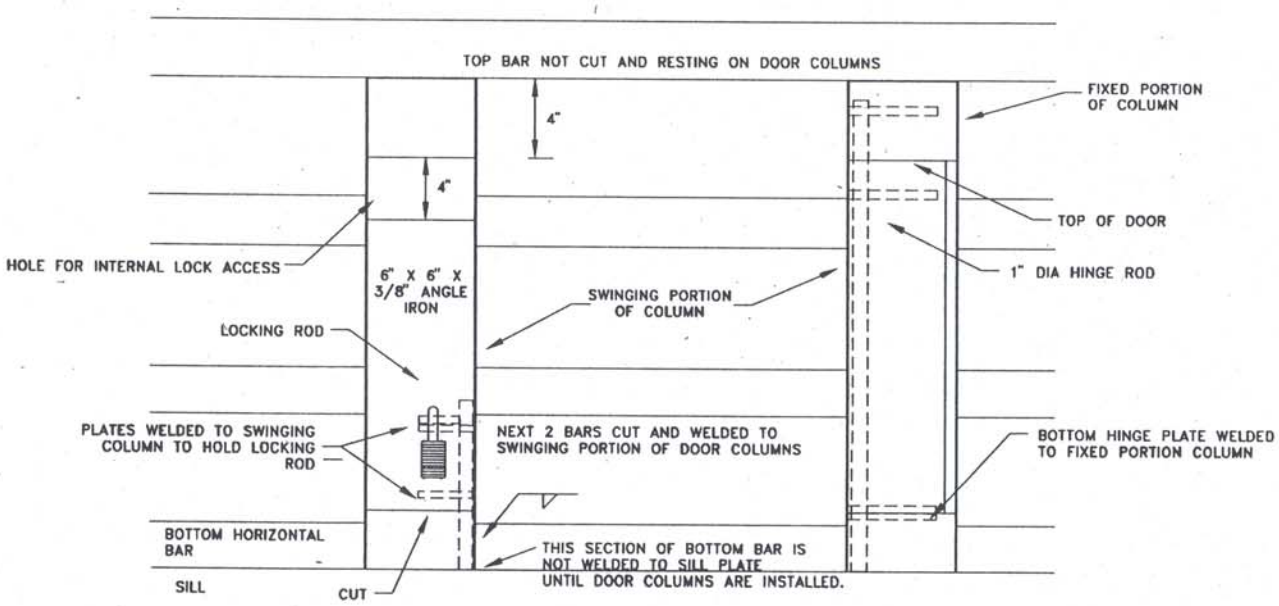

DOOR DETAIL
FRONT ELEVATION VIEW

NOT TO SCALE

Page 5 of 6
Designed by R. Powers, Drafted by M. Washburn © American Cave Conservation Association

Appendix III
Design A

These plans are provided courtesy of the American Cave Conservation Association and are revised annually. Contact the ACCA for current construction specifications or for consultation on special needs (see Appendix II).

WARNING: OTHER DOOR DESIGNS HAVE FAILED OR HAVE BEEN BREACHED, BE SURE TO FOLLOW DETAILS EXACTLY.

NOTE: DOOR COLUMNS MAY BE PRE-FABRICATED. HORIZONTAL BARS ARE INSTALLED FIRST AND THEN CUT FOR DOOR INSTALLATION.

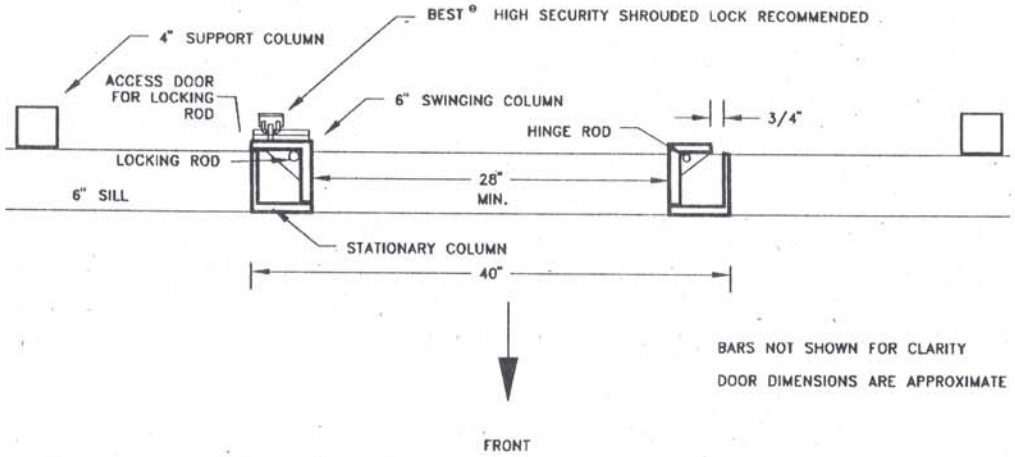

DOOR DETAIL
PLAN VIEW

NOT TO SCALE

Designed by R. Powers, Drafted by M. Washburn © American Cave Conservation Association

Appendix III
Design B

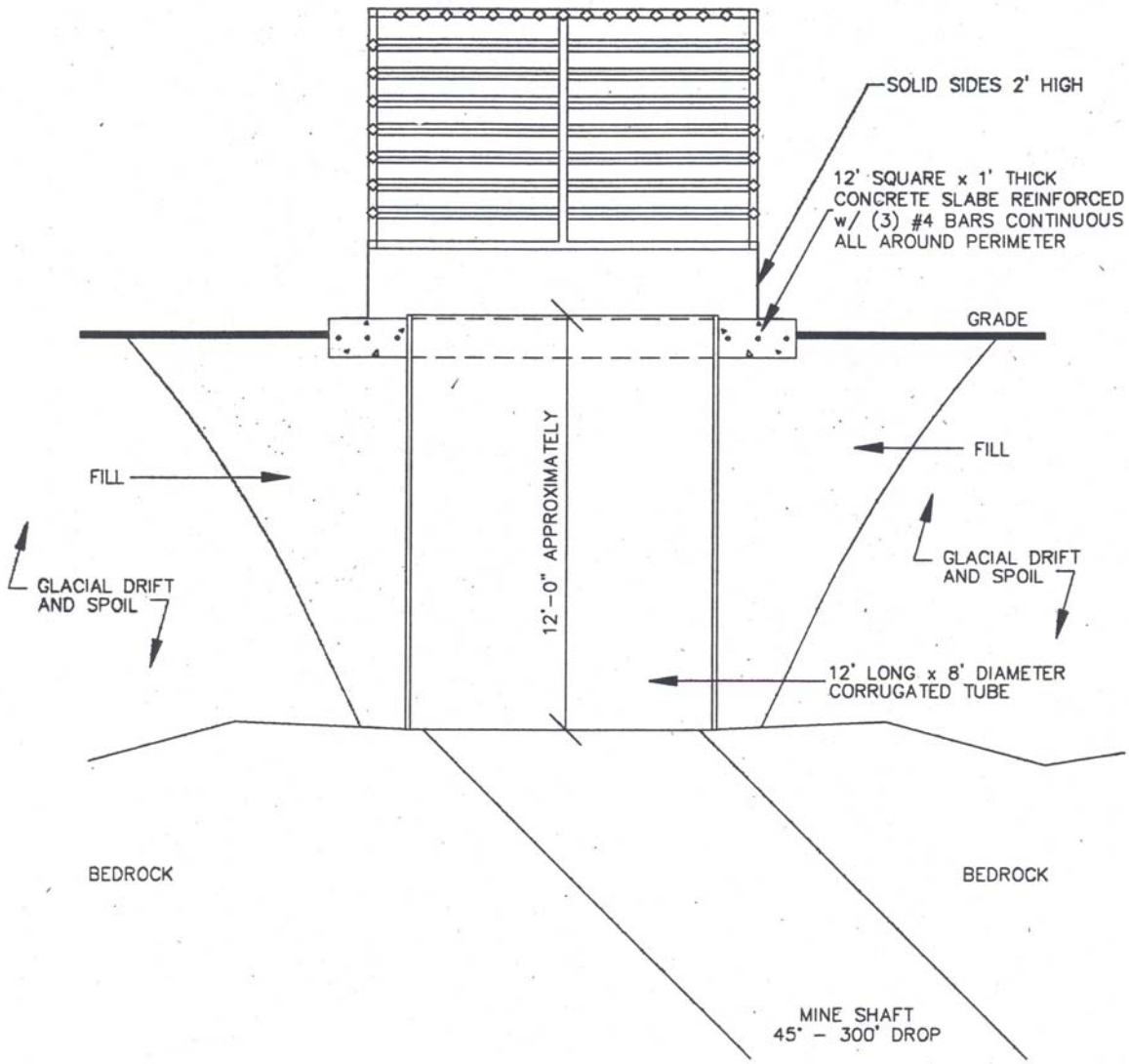

CAGE AND SHAFT CROSS SECTION

U.P. ENGINEERS AND ARCHITECTS, Inc.
ENGINEERING ARCHITECTURE PLANNING
611 Main Street • Norway, Michigan 49870
(906) 563-5407

MICHIGAN DEPARTMENT OF NATURAL RESOURCES
BAT CAGE DESIGN
NORWAY, MICHIGAN

DRAWN BY: C. ANDERSON

Appendix III
Design B

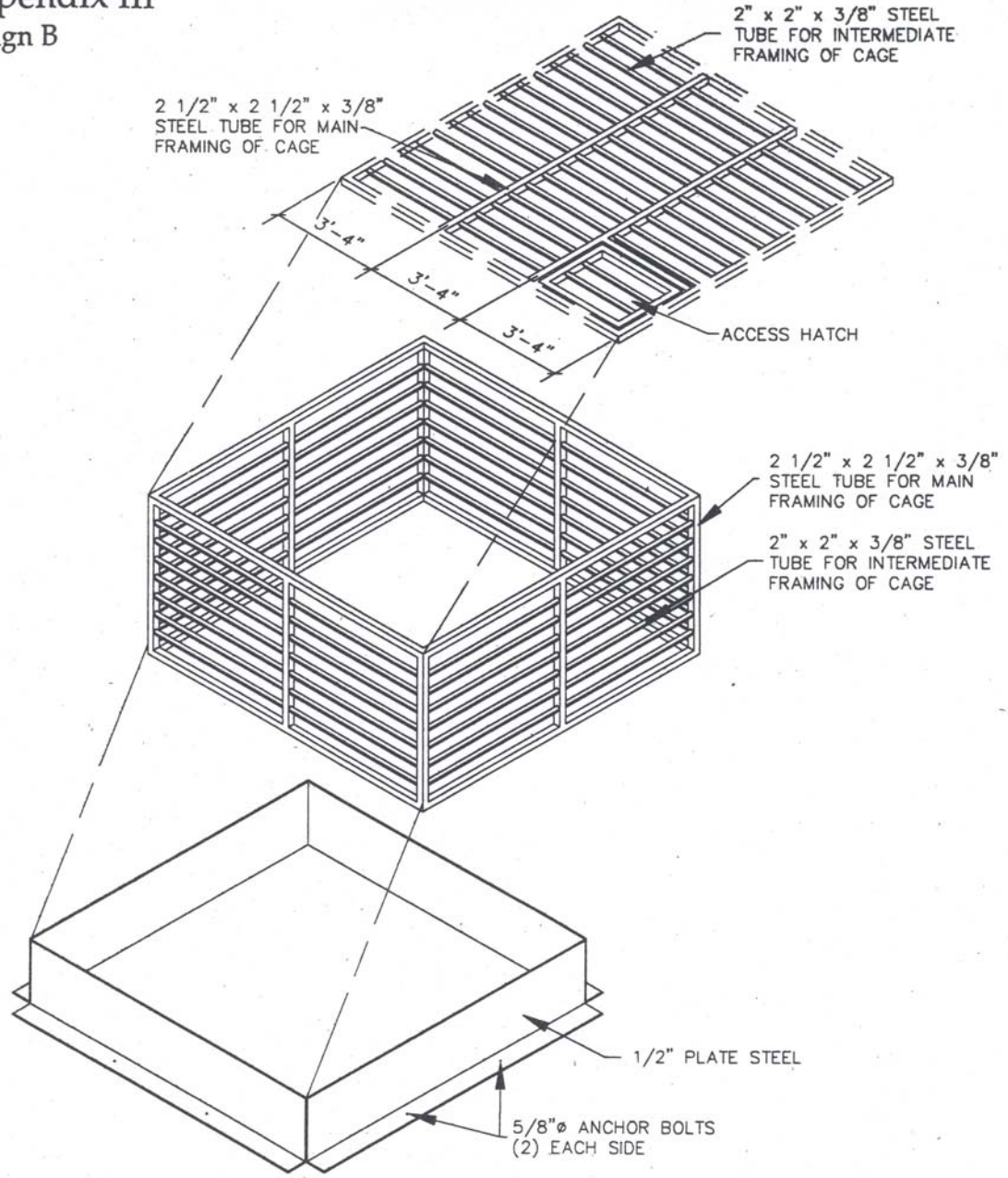

U.P. ENGINEERS AND ARCHITECTS, Inc.
ENGINEERING ARCHITECTURE PLANNING
611 Main Street • Norway, Michigan 49870
(906) 563-5407

MICHIGAN DEPARTMENT OF NATURAL RESOURCES
BAT CAGE DESIGN
NORWAY, MICHIGAN

DRAWN BY: C. ANDERSON

Appendix III
Design B

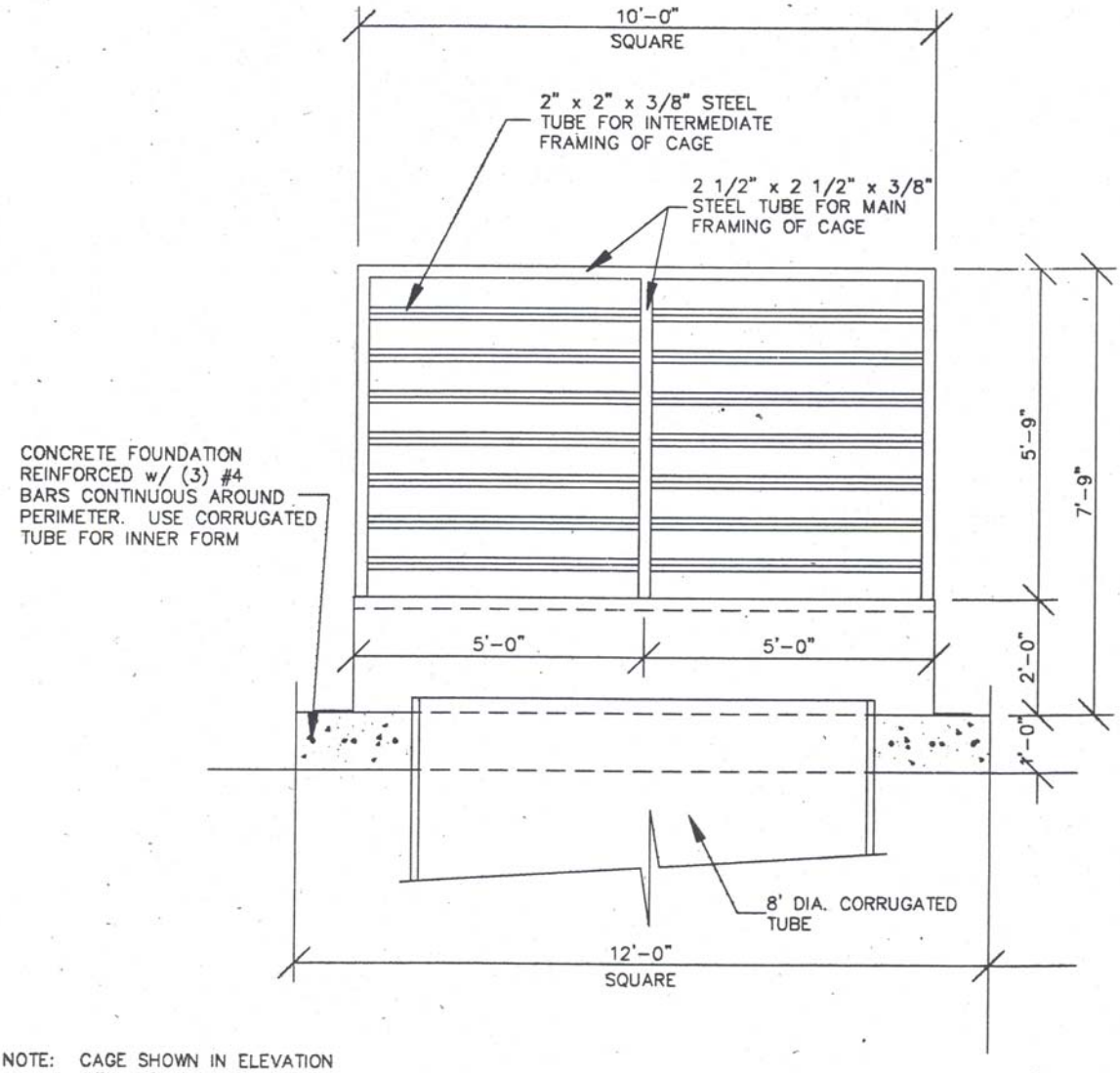

NOTE: CAGE SHOWN IN ELEVATION VIEW. FOUNDATION SHOWN IN SECTION.

CAGE ELEVATION AND FOUNDATION SECTION

U.P. ENGINEERS AND ARCHITECTS, Inc.
ENGINEERING ARCHITECTURE PLANNING
611 Main Street • Norway, Michigan 49870
(906) 563-5407

MICHIGAN DEPARTMENT OF NATURAL RESOURCES
BAT CAGE DESIGN
NORWAY, MICHIGAN

DRAWN BY: C. ANDERSON

Appendix III
Design B

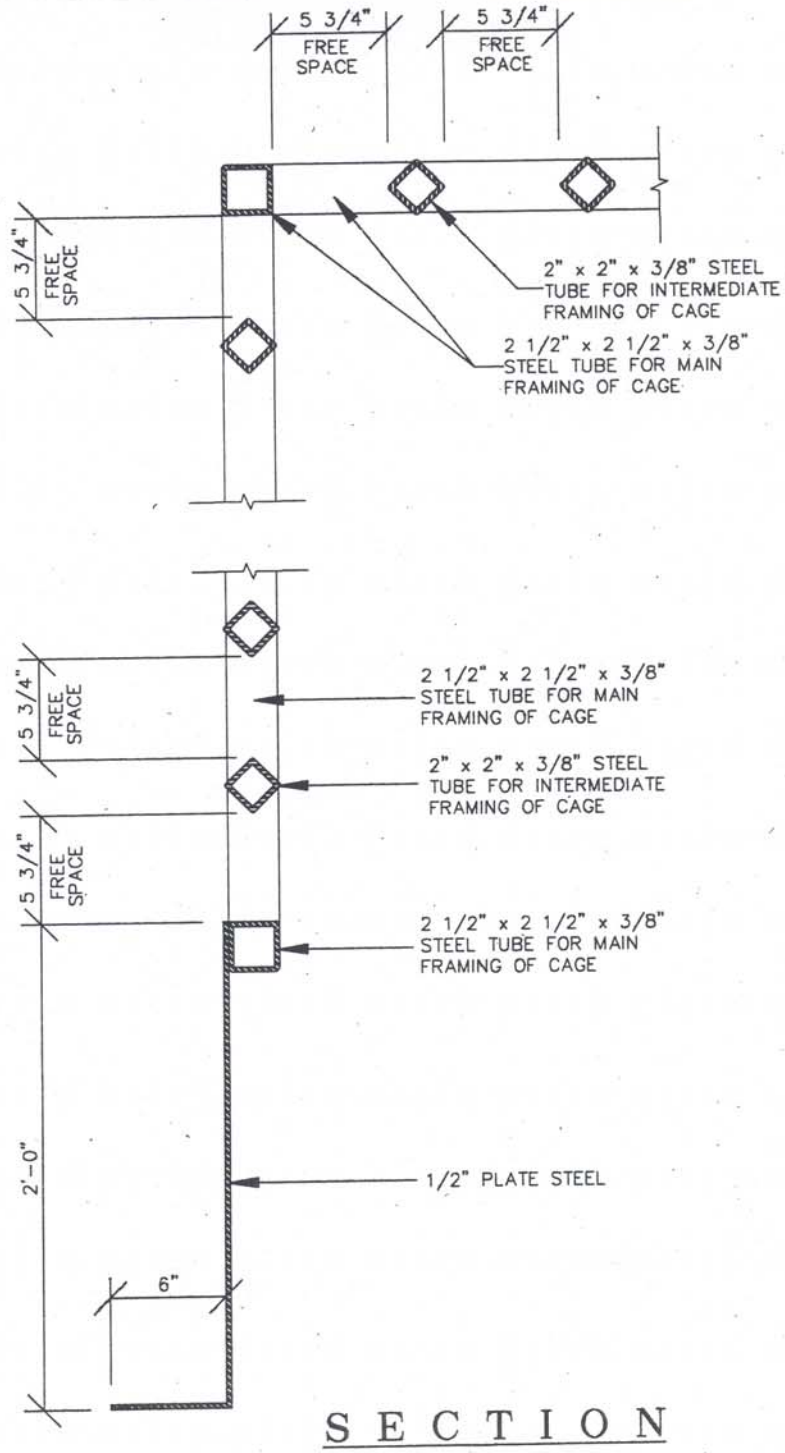

SECTION

U.P. ENGINEERS AND ARCHITECTS, Inc.
ENGINEERING ARCHITECTURE PLANNING
611 Main Street • Norway, Michigan 49870
(906) 563-5407

MICHIGAN DEPARTMENT OF NATURAL RESOUR
BAT CAGE DESIGN
NORWAY, MICHIGAN

DRAWN BY: C. ANDERSON

APPENDIX C

GUIDELINES FOR THE PROTECTION OF BAT ROOSTS

The following reprint is from the Journal of Mammalogy, 1992, Vol. 73(3):707-710. It provides guidelines for monitoring, research and protection of bat populations.

This publication has been photocopied and included with permission from the Journal of Mammalogy.

GUIDELINES FOR THE PROTECTION OF BAT ROOSTS

INTRODUCTION

The American Society of Mammalogists recognizes the need for guidelines to regulate activities in and around bat roosts. In developing these guidelines, the Conservation of Land Mammals Committee has weighed the need for protection from disturbance against the needs for legitimate scientific inquiry and or monitoring declining bat populations. These guidelines are intended to assist field biologists and state and federal agencies charged with the granting of permits. They also reaffirm the Society's commitment toward high professional standards and its opposition to activities that could endanger bat colonies.

The preservation and conservation of bat roosts, especially caves, is probably the most important issue in bat conservation, particularly since many roosts are traditional and used by successive generations of bats over many years (Hill and Smith, 1984). One of the most important factors in the decline of bat populations in the United States and around the world is the destruction of roost sites. Roost sites (caves) are a limited resource that seasonally contain a high proportion of many species. Bats, particularly when concentrated in caves or other structures, are extremely vulnerable. Despite their generally small size, bats have low reproductive rates and long generation times and cannot sustain elevated rates of mortality or depressed levels of recruitment (Hill and Smith, 1984; McCracken, 1989). Of the 39 species of bats in North America north of Mexico, at least 18 species rely substantially on caves as roosting sites, and many of the remaining 21 species rely on caves during some time of the year (Barbour and Davis, 1969; McCracken, 1989). The fact that large numbers. Of individuals often are concentrated into only a few specific roost sites results in high potential for disturbance. Cave-dwelling bats are especially sensitive to both direct disturbances, such as human entry, and indirect disturbances to the roost and surrounding habitat. Persons entering maternity colonies can cause bats to abandon young or drop them to the floor from where they are usually not retrieved and subsequently die (Gillette and Kimbrough, 1970; McCracken, 1989). In addition, the handling of pregnant females has been known to cause abortion (Gunier, 1971).

Disturbance during hibernation may cause bats to arouse prematurely, elevating their body temperatures and utilizing stored energy reserves which usually cannot be spared. Bat specialists have estimated that each arousal of hibernating bats can rob them of 10 to 30 days of stored fat reserves (Thomas et al., 1990; Tuttle, 1991). Bats may return to a state of torpor after disturbance, but then may not have sufficient energy to survive the rest of the winter. In addition, bat caves are vulnerable to habitat alteration and degradation. Changes in cave microclimate (e.g., humidity, temperature and air flow) are imposed through modification of cave entrances. Clearing trees from around cave entrances may result in an overall increase in summer temperatures or a decrease in winter temperatures, both of which may render a cave uninhabitable. The natural air flow in and out of a cave or its humidity may be altered to such an extent that the habitable portions are reduced or eliminated (Hill and Smith, 1984). Disturbance and destruction of roosts, especially caves, have contributed to the listing of many species and subspecies of bats on the U.S. Fish and Wildlife Service's list of endangered and threatened species (McCracken, 1989; Mohr, 1972). Such designations and the subsequent recovery efforts require bat specialists and wildlife managers to monitor remaining populations. Guidelines presented herein should be considered as minimum precautions when dealing with roosts containing endangered or threatened

taxa. These guidelines should also be considered when working with other bat roosts as well, because severe reduction or elimination of populations through careless entry may eventually lead to additional species and subspecies being threatened. In addition, we know very little regarding the actual status of some populations of most bat species, and many species that are not listed as threatened may warrant listing and need the protection that goes along with it (McCracken, 1989; Stebbings, 1980). Moreover, several species of bats often use the same roost; thus, a roost containing mostly non-endangered species may also harbor endangered ones (Hill and Smith, 1984; McCracken, 1989). This lack of knowledge regarding the status of bat populations emphasizes the real need for precautions around roosts of all bats (Stebbings, 1980). As an additional precaution, we recommend that any species of cave-dwelling bat be treated as though their populations are in decline; exceptions should be limited only to those cases for which substantial evidence exists to the contrary.

RECOMMENDED GUIDELINES

1. Avoid revealing exact locations of bat roosts. Many bat specialists have already adopted this practice, often after declines in populations, damage to roosts, or both, have taken place soon after a publication revealed the roost location.

2. Caves or other structures designated as critical habitat for endangered or threatened species should not be entered except by federal or state management biologists or researchers with valid permits when bats are present.

3. Caves protected by fences or gates should not be entered except by special permit holders, regardless of species of bat present.

4. Caves protected by warning signs about bat nurseries or hibernating bats should not be entered during the times of year specified on the sign. Entry can be permitted at those times of year when bats are not present, so long as the cave is left unaltered and unpolluted.

5. Although species' tolerances differ, maternity colonies of endangered or threatened bats should not be visited, unless there is a special need and a federal permit has been obtained. Maternity colonies of non-endangered or non-threatened bats generally should not be disturbed. It is highly recommended that if maternity colonies must be visited that it be done at night while the adults are away from the roost.

6. For bats whose populations are either known or suspected of being in decline, most field research, including banding, should be discontinued while the bats are hibernating. Even for monitoring purposes, disturbances should be as brief as possible and should occur no more than once per winter, preferably in alternate years. In general, winter banding efforts for any bat population should be minimal and clearly warranted because arousing bats to band them can cause excessive mortality.

7. Persons entering bat roosts should reduce their impact by minimizing noise and the number of participants. Lights should be limited to those powered by batteries or cold chemicals such as cyalume. Persons should avoid passing too closely to roosting bats, and should leave no refuse or other signs that they were there.

8. Research on federally listed bats should be carried out through stringent adherence to the terms of federal and, when applicable, state permits.

9. Persons collecting bats need to be aware of federal and state laws governing the collection and transportation of bats, and must be in possession of the appropriate scientific collecting permits before the study is undertaken. When bats are collected for laboratory research, proper handling and transportation of captured animals should be practiced to minimize injuries and/or deaths, and therefore the actual numbers taken from a roost.

10. In nearly all cases, collecting should be done at, near or outside roost entrances

rather than inside the roosts. Collecting is usually done with harp nets placed at or near roost entrances or with mist nets placed outside roost entrances. A limited amount of collecting can be safely done inside large cavern systems or in some man-made structures. Collectors should avoid captures in excess of numbers needed by estimating the size of colonies before setting up nets.

11. Collections should be minimal, including only a small fraction of the population of any given colony, should not be redundant with existing collections, and should be sufficiently infrequent to ensure that healthy colonies are sustained. Collecting should only be done as a means of furthering our knowledge and understanding of bats and not just because the bats are there.

12. Collecting should be done so as to avoid any damage to the cave or other roost structure.

13. Firearms, open-flame torches, smoke or toxicants (including pesticides) should never be used inside bat roosts.

14. Despite their genetic, ecological and economic importance, bats have an image problem and are not popular with most of the public. Current public attitudes towards bats threaten their survival, especially since the first reaction of most people to their presence in houses or buildings is to eliminate or remove them as quickly as possible (Hill and Smith, 1984). Because popularity is a major stimulus for conservation, we recommend that wildlife agencies, spelunking societies, colleges and universities, and nature centers, in conjunction with bat specialists if possible, increase their efforts to educate the public about bats. These efforts could include newspaper and magazine articles and talks directed at school children, conservation groups, spelunking clubs and land owner groups. In addition, we recommend continuing education programs dealing with bats be directed at wildlife managers, conservation officers, wildlife commissioners, animal damage control' agents and veterinarians. Adequate protection for bats may be next to impossible without an educated public (Tuttle, 1979). Through such education efforts, the public can be made more receptive to restrictions on human activities in or near bat roosts.

15. Although many of the guidelines proposed herein call for various permits for research, we do not imply that merely holding permits will ensure against detrimental effects of study. The American Society of Mammalogists expects that scientists will maintain high professional standards when conducting research in and around bat roosts.

16. We recognize that special circumstances may require these or any other guidelines to be violated for the welfare of an endangered or threatened species. Decisions on such matters will have to be made on an *ad hoc* basis by bat specialists and recovery team members in conjunction with the appropriate wildlife agencies. We intend these guidelines as general guidelines only, subject to modification under extenuating circumstances or as new information becomes available.

Acknowledgments

We would very much like to thank B. S. Clark, M. J. Harvey, T. H. Kunz, J. L. Patton, R. M. Timm, M. D. Tuttle, B. J. Verts, K. T. Wilkins, D. E. Wilson, and two anonymous reviewers for their helpful suggestions on improving these guidelines.

Literature Cited

Barbour, R. W., and W. H. Davis. 1969. Bats of America. University of Kentucky Press, Lexington, 286 pp.

Gillette, D. D., and D. Kimbrough. 1970. Chiropteran mortality. Pp. 262-283, *in* About bats: a chiropteran biology symposium (B. H. Slaughter and D. W. Walton, eds.). Southern Methodist University Press, Dallas, Texas, 339 pp.

Gunier, W. J. 1971. Stress-induced abortion in bats. Bat Research News, 12:4.

Hill, J. E., and J. D. Smith. 1984. Bats: a natural history. University of Texas Press, Austin, Texas, 243 pp.

McCracken, G. F. 1989. Cave conservation: special problems of bats. National Speleological Society Bulletin, 51:47-51.

Mohr. C. E. 1972. The status of threatened species

of cave-dwelling bats. National Speleological Society Bulletin, 34:33-47.

STEBBINGS, R. E. 1980. An outline global strategy for the conservation of bats. Pp. 173-178, *in* Proceedings of the Fifth International Bat Research Conference (D. E. Wilson and A. L Gardner, eds.). Texas Tech University Press, Lubbock, Texas, 434 pp.

THOMAS. D. W., M. DORAIS, AND J-M. BERGERON. 1990. Winter energy budgets and cost of arousals for hibernating little brown bats. *Myotis lucifugus*. Journal of Mammalogy, 71:475-479.

TUTTLE, M. D. 1979. Status, causes of decline, and management of endangered gray bats. The Journal of Wildlife Management, 43:1-17.

_____. 1991. How North America's bats survive the winter. Bats, 9:7-12.

Prepared by the Protection of Bat Roost Guidelines subcommittee, Steven R. Sheffield, James H. Shaw, Gary A. Heidt, and Leroy R. McClenaghan, of the Conservation of Land Mammals Committee. These guidelines were approved by the Board of Directors on 21 June 1987 at their annual meeting in Albuquerque, New Mexico.