Mountain Birdwatch

Bicknell's Thrush © Jeff Nadler

Protocol and Standard Operating Procedures for Monitoring High-elevation Landbirds in the Northern Appalachian and Laurentian Regions

Version 2.0
December 2008

Mountain Birdwatch: Protocol and Standard Operating Procedures for Monitoring High-elevation Landbirds in the Northern Appalachian and Laurentian Regions

Version 2.0

Editors:
Julie A. Hart, Vermont Center for Ecostudies
J. Daniel Lambert, American Bird Conservancy

Protocol Development Team:
Yves Aubry, Canadian Wildlife Service
John Buonaccorsi, University of Massachusetts
Greg Campbell, Bird Studies Canada
Jeffrey Corser, New York State Department of Environmental Conservation
William DeLuca, University of Massachusetts
Randy Dettmers, U.S. Fish and Wildlife Service
Therese Donovan, Vermont Fish and Wildlife Cooperative Research Unit (USGS)
Thomas Hodgman, Maine Department of Inland Fisheries and Wildlife
Pamela Hunt, Audubon Society of New Hampshire & New Hampshire Fish and Game Dept.
David King, U.S. Forest Service
Kent McFarland, Vermont Center for Ecostudies
Brian Mitchell, National Park Service
Leighlan Prout, U.S. Forest Service
Joseph Racette, New York State Department of Environmental Conservation
Jason Riddle, North Carolina State University
Frank Rivera, U.S. Fish and Wildlife Service
Rebecca Whittam, Bird Studies Canada

Table of Contents

SECTION 1: PROTOCOL NARRATIVE **4**
I. Background and Objectives **4**
Rationale for Monitoring High-elevation Birds 4
A Brief History of High-elevation Bird Monitoring in the Region 6
Monitoring Goals and Objectives 9
Programmatic Goals and Objectives 10
II. Sampling Design: Generalized Random Tessellation Stratified (GRTS) **11**
Rationale for Selecting GRTS 11
Sample Frame 11
Selecting Sites, Locating Stations, and Defining Sample Units 11
Sample Size Requirements 12
Frequency and Timing of Sampling 14
III. Field Methods **14**
Field Season Preparations, Field Schedule, and Equipment Setup 14
Documenting Survey Locations 15
Protocol Development 15
Summary of Pilot Season 16
Conducting the Bird Survey 18
Collecting Habitat, Environmental, and Observer Data 19
End-of Season Procedures 20
IV. Data Handling, Analysis, and Reporting **20**
Overview of Database Design 20
Metadata Procedures 20
Data Transcription, Entry, and Verification 21
Data Archival Procedures 21
Recommendations for Statistical Analysis 21
Recommended Reporting and Evaluation Procedures 22
V. Personnel Requirements and Training **22**
Roles and Responsibilities 22
Qualifications 23
Training Procedures 24
VI. Annual Workload and Schedule **24**
Annual Workload 24
Schedule 24
VII. Acknowledgments **25**
VIII. References **25**

SECTION 2: STANDARD OPERATING PROCEDURES **29**
SOP #1: Field Season Logistics **29**
SOP #2: Recruiting and Training Observers **31**
SOP #3: Delineating the Sample Frame and Establishing Survey Points **35**
SOP #4: Conducting the Bird Survey **38**
SOP #5: Documenting Habitat and Climate Variables **41**
SOP #6: Data Submission **48**

SOP #7: Data Management **49**
SOP #8: Data Analysis and Reporting **51**

Appendix A. Pilot Protocols Tested in June 2008 ..... **55**
Appendix B. Mountain Birdwatch Datasheet **57**
Appendix C. Sample Datasheet **61**

SECTION 1: PROTOCOL NARRATIVE

I. Background and Objectives

This protocol represents an effort to strengthen monitoring of high-elevation landbirds from the Catskill Mountains of New York to the Cape Breton Highlands of Nova Scotia through improved coordination, statistical design, and data management. It builds on knowledge and experience gained by several institutions over sixteen years of mountain bird research and monitoring in the region. A standardized international protocol, aligned with the information needs of land stewards and policy-makers, will promote conservation of a vulnerable bird community. A unified approach will also achieve efficiencies necessary to sustain high-elevation landbird monitoring over the long term.

The survey design and standard operating procedures presented here reflect the guiding principles of *Opportunities for Improving Avian Monitoring*, a report of the Monitoring Subcommittee of the North American Bird Conservation Initiative (U.S. NABCI 2007). Our collaboration formed in 2006 under the aegis of the Northeast Coordinated Bird Monitoring Partnership (www.nebirdmonitor.org) and operates in concert with the International Bicknell's Thrush Conservation Group (www.bicknellsthrush.org), the Appalachian Trail MEGA-Transect, and the Monitoring and Performance Reporting Framework for the Northeast Association of Fish and Wildlife Agencies. Participating agencies and organizations will begin implementing this protocol during the 2009 breeding season. Interest from the Appalachian Mountain Joint Venture, the National Park Service, and the Appalachian Trail Conservancy may lead to adaptation of this program to high-elevation bird communities of the mid-Atlantic and southern Appalachian regions.

<u>Rationale for Monitoring High-elevation Birds</u>

High-elevation forests of New York, northern New England, and southeastern Canada comprise a small fraction of the landscape, however they make a large contribution to the region's avian diversity. Stands of balsam fir (*Abies balsamea*) and red spruce (*Picea rubra*), which thrive in the cool climate of upper elevations, harbor a number of bird species that are uncommon or absent at lower altitudes, including Bicknell's Thrush (*Catharus bicknelli*). Bicknell's Thrush is a globally rare species and the region's only endemic songbird. It breeds in montane fir-spruce thickets from the Catskill Mountains of New York northeast to the Katahdin region of Maine (Atwood et al. 1996) and north to the Laurentian Mountains of southern Quebec (Gauthier and Aubry 1996). It also occurs in highland conifers of northern New Brunswick and Cape Breton, Nova Scotia, in addition to coastal conifers of Cape Breton and the Gulf of St. Lawrence in Quebec (Ouellet 1993, Nixon 1999) (Fig. 1). Use of mixed forest is seldom observed in the United States, but surveys in Quebec (Y. Aubry pers. comm.), New Brunswick (Nixon et al. 2001) and Nova Scotia (Campbell and Whittam 2006) indicate some use of regenerating timberlands with a variable hardwood component. The winter range of Bicknell's Thrush is restricted to the Greater Antilles, with the majority of birds concentrated in montane broadleaf forests of the Dominican Republic (Rimmer et al. 2001). This habitat has been reduced to approximately 10% of its historic extent in recent decades (Stattersfield et al. 1998).

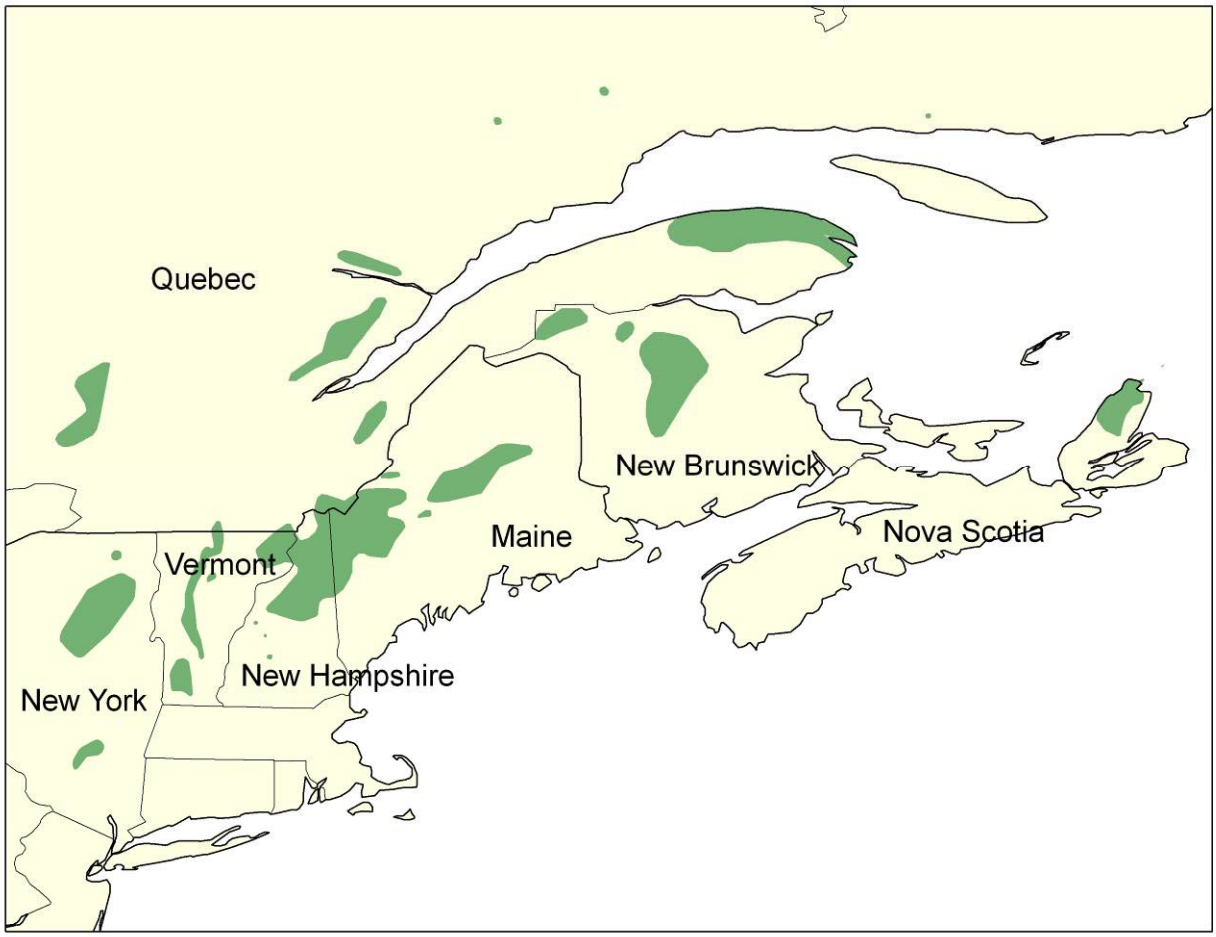

Figure 1. Known breeding range of Bicknell's Thrush.

Because of its scarcity, selective habitat use, and limited breeding and wintering ranges, Bicknell's Thrush has received Special Concern designation from New York, Vermont, New Hampshire and Maine, as well as from the Committee on the Status of Endangered Wildlife in Canada (COSEWIC 1999). Partners in Flight included the thrush on the North American Watch List for Landbirds, calling for immediate action to maintain or increase its numbers in the Northern Forest Biome (Rich et al. 2004). In response to this call, the International Bicknell's Thrush Conservation Group will release a conservation action plan in the spring of 2009. The plan will identify opportunities to restore winter habitat in the Dominican Republic, enhance breeding habitat in areas now managed for timber, and address other potentially limiting factors through research, education, and policy improvements. The plan's overall conservation goal will be to increase the global Bicknell's Thrush population by 50% in 50 years, with most of the gains expected to be made during the final 30 years of this period. Achieving the goal requires a monitoring program to measure population status, illuminate limiting factors, and assess effects of management and policy decisions. A multi-species survey could produce information needed to conserve other high-elevation songbirds, some of which are also considered vulnerable.

Mountain ecosystems provide a unique opportunity for measuring effects of anthropogenic activity, as they are among the most sensitive indicators of environmental change. They are more susceptible than lower areas to the effects of global warming, atmospheric pollution, and certain land uses, such as wind power and ski area development. Even a slight increase in growing-season temperature could allow hardwoods to encroach on high-elevation fir and spruce (Beckage et al. 2008) and dramatically reduce critical bird habitat (Rodenhouse et al. 2008). High doses of acid compounds from atmospheric deposition may leach calcium from thin and poorly buffered soils and limit populations through egg-shell defects (Hames et al. 2002, Graveland and vanderWal 1996). Bioaccumulation of toxic methylmercury in mountain food webs has the potential to reduce the survival of avian insectivores (Rimmer et al. 2005).

Unfortunately, the significance of these threats is not well known. And while previous efforts to monitor high-elevation landbirds have provided a solid foundation for this protocol, they are not sufficient to meet the need for a regionally coordinated and statistically robust approach to the challenge of mountain bird conservation.

A Brief History of High-elevation Bird Monitoring in the Region

Prior to 1991, there was no organized attempt to survey high-elevation breeding birds in the northeastern U.S. or adjacent regions of Canada, except for individual research projects and breeding bird atlases. A small number of Breeding Bird Survey routes intersected Bicknell's Thrush habitat in Quebec, New Hampshire, Maine, and Nova Scotia, however these produced just 48 encounters with the species between 1966 and 2006 (USGS Patuxent Wildlife Research Center 2006). Since 1991, several programs have emerged to fill the gap (Table 1). These efforts have produced models of distribution (Atwood et al. 1996, Lambert et al. 2005), occupancy (Frey 2008) and habitat (Hale 2006), as well as estimates of population size (Hale 2006) and population trend at various spatial and temporal scales (Lambert 2005, Campbell et al. 2007, King et al. 2008, Lambert et al. 2008). Results have also been used to predict effects of climate change on Bicknell's Thrush distribution in the United States under different carbon-emissions scenarios (Rodenhouse et al. 2008).

Findings published to date justify the current level of concern. Between 1993 and 2003, the core population of Bicknell's Thrush, which breeds in the White Mountain National Forest, numbered as few as 4,900 individuals (Hale 2006) and experienced annual declines of 7% per year along 40 survey routes (King et al. 2008). Yellow-bellied Flycatcher and Magnolia Warbler also declined sharply over the same period, while no species registered significant gains. Six years of data from New Brunswick and Nova Scotia (2002-2007) showed an abrupt drop in Bicknell's Thrush numbers in Atlantic Canada (Campbell et al. 2007, Whittam and Campbell unpubl. data), while annual surveys at Mont Gosford, Quebec, from 2001-2007 showed a clear decline in the number of stations occupied by Bicknell's (Aubry unpubl. data). In addition, climate change projections derived from survey data indicate that suitable Bicknell's Thrush habitat may be lost from the United States following increases in summer temperatures that are projected to occur this century (Rodenhouse et al. 2008).

Although these studies have demonstrated the vulnerability of Bicknell's Thrush, they are limited by several important shortcomings. First, each program lacks a probabilistic sampling

design, which limits statistical inference. Second, differences in survey timing and protocol hamper integration of results. Third, there is wide variation in the suitability of count procedures for modeling abundance and occupancy. Finally, there is redundant monitoring effort in New Hampshire's White Mountains and inadequate coverage in Quebec and northwestern Maine.

Table 1. High-elevation landbird surveys performed in the northeastern United States and eastern Canada since 1991.

Program	Lead Institution(s)	State / Province	Timeframe	Technique
Green Mountain National Forest high-elevation bird monitoring	Green Mountain National Forest, University of Vermont	VT	1991-2000	Simple point counts
Vermont Forest Bird Monitoring Program high-elevation surveys	Vermont Institute of Natural Science	VT, ME	1991- 2000	Simple point counts
Bicknell's Thrush distribution survey	Vermont Institute of Natural Science and Manomet Center for Conservation Sciences	MA, NY, VT, NH, ME	1992-1994	Playback-assisted "presence-absence" surveys
Bicknell's Thrush distribution survey	Canadian Wildlife Service	QC	1998-present	Simple point counts (1998-2000) Repeated simple counts (2001-present)
White Mountain National Forest high-elevation bird monitoring	White Mountain National Forest and Audubon Society of New Hampshire	NH	1993-present	Simple point counts
Mountain Birdwatch (Version 1.0)	Vermont Institute of Natural Science / Vermont Center for Ecostudies, U.S. Fish and Wildlife Service	NY, VT, NH, ME	2000-present	Simple point counts followed by playback-assisted "presence-absence" surveys when Bicknell's Thrush was not otherwise detected
High-Elevation Landbird Program	Bird Studies Canada	NB, NS	2002-present	Point counts with time-of-detection information

A new, coordinated approach, incorporating enhanced statistical design, can optimize power to detect trends. Greater attention to environmental covariates can reveal factors underlying population change. And implementation from New York to Nova Scotia can generate population

and habitat models at the scale necessary to guide conservation of Bicknell's Thrush and other vulnerable species. Additional advantages of coordination include cost-effective training, data management, and reporting.

Collaborating institutions have adopted "Mountain Birdwatch" as the name of the unified monitoring program. To avoid confusion with the original Mountain Birdwatch, which began in the U.S. in 2000 and will continue through 2009, the new international program may be referred to as "Mountain Birdwatch Version 2.0" or "Mountain Birdwatch II".

Geographic Scope and Target Species

Mountain Birdwatch is focused on breeding songbirds within the current breeding range of Bicknell's Thrush (Fig. 1), which includes the Appalachian Mountains and their extensions from the Massachusetts border into eastern Canada, the Catskill Mountains in southern New York, and the southern Laurentian Mountains, including the Adirondacks.

A few dozen bird species regularly breed at upper elevations in the focal region. From this group, we selected ten species for targeted monitoring based on level of conservation concern, degree of habitat specialization and range restriction, ease of identification, and expected detectability in the field (Table 2). The list includes four management indicators for montane fir-spruce forest recognized by the Green Mountain and White Mountain National Forests (Yellow-bellied Flycatcher, Boreal Chickadee, Bicknell's Thrush, and Blackpoll Warbler). An attempt was made to include species in the same genus in order to investigate variations in climate-change response and/or interactions among congenerics. This approach also ensures that observers consistently distinguish among species with similar appearances and vocalizations.

In addition, we will monitor the abundance of red squirrels (*Tamiasciurus hudsonicus*), whose predations on open-cup nests in the focal habitat cause widespread reproductive failure, following biennial pulses of cone mast by balsam fir (McFarland unpubl. data).

Table 2. Target species.

Common Name	**Scientific Name**
Yellow-bellied Flycatcher	*Empidonax flaviventris*
Black-capped Chickadee	*Poecile atricopilla*
Boreal Chickadee	*Poecile hudsonica*
Winter Wren	*Troglodytes troglodytes*
Bicknell's Thrush	*Catharus bicknelli*
Swainson's Thrush	*Catharus ustulatus*
Hermit Thrush	*Catharus guttatus*
Blackpoll Warbler	*Dendroica striata*
Fox Sparrow	*Passerella iliaca*
White-throated Sparrow	*Zonotrichia albicollis*
Red Squirrel	*Tamiasciurus hudsonicus*

Monitoring Goals and Objectives

The following goals and objectives were formulated for the regional scale. Subregions and management units may wish to establish complementary goals or customize measurable objectives to meet case-specific requirements for statistical power and/or precision.

Monitoring Goal 1: To measure the annual population status of target species in terms of distribution, abundance/density, and occupancy

Objectives

a) To produce site-specific occurrence information that can be aggregated to map the distribution of each target species within the survey area
b) To produce estimates of density and abundance for Bicknell's Thrush with coefficients of variation (CV) ≤ 0.20
c) To produce estimates of density and abundance for each of the other target species with coefficients of variation ≤ 0.40
d) To produce an estimate of occupancy for each target species with a 95% confidence interval width ≤ 0.20

Monitoring Goal 2: To measure changes in the population status of target species over time

Objectives

a) To document changes in the distribution of target species within the survey area
b) To estimate population trends with 80% power to detect a minimum 3% annual change in target species abundance/density over 30 years at a significance level of 0.1 (based on information requirements of the forthcoming "International Bicknell's Thrush Conservation Plan")
c) To maintain a CV about the regression line ≤ 0.40 for each trend estimated over a period 30 years or more
d) To document changes in target species occupancy through estimates of site colonization and extinction rates

Monitoring Goal 3: To relate population status and trend information to biotic and abiotic variables that may affect the target species

Objectives

a) To determine which of the following factors explain variations in the abundance of target species through space and time: habitat characteristics, topography, climate, latitude/longitude, landscape structure, red squirrel abundance, mercury exposure, calcium availability, forestry practices, and extent of wet broadleaf forest in Hispaniola (Bicknell's Thrush only)
b) To determine which of these factors explain probability of occupancy and rates of colonization and extinction

Programmatic Goals and Objectives

Programmatic Goal 1: To make observational data (date, location, count, etc.) and associated metadata publicly available for visualization and download through the Avian Knowledge Network (AKN), while recognizing legal, institutional, proprietary, and other constraints.

Objective

a) To upload unrestricted data for each season to the Northeast Avian Data Center, a regional node to the AKN, by the end of the same calendar year.

Programmatic Goal 2: To provide decision-makers with tools and analyses to conserve high-elevation birds in the Northern Appalachian and Laurentian Regions

Objectives

a) To incorporate the principal predictor variables derived from Monitoring Goal 3 into GIS models of abundance and occupancy for each target species

b) To produce a wind farm siting assessment that incorporates GIS models of avian abundance and/or occupancy, wind resources, and view-sheds

c) To estimate target species density within specific management and/or political units to inform estimates of abundance at appropriate spatial scales

d) To collaborate with demographic researchers to produce a range-wide Bicknell's Thrush population viability analysis using best available information on state variables (abundance and occupancy) and associated vital rates (reproduction, survival, colonization, and extinction)

e) To project climate-change effects on occupancy of high-elevation habitat by target species under two or more climate models, each incorporating a minimum of two CO_2-emission pathways.

f) To evaluate the effects of major policy and management decisions on the target species, as such decisions are implemented. Examples may include policies to reduce airborne pollutants (CO_2, Hg, NO_x, SO_x), expand wind power development, or modify forestry practices.

Programmatic Goal 3: To increase public understanding of the ecology, status, and conservation requirements of high-elevation songbirds in the Northern Appalachian and Laurentian Regions

Objectives

a) To communicate Mountain Birdwatch objectives, methods, results, and conservation applications to general audiences via public presentations and popular media outlets

b) To involve qualified citizen scientists and representatives of cooperating agencies and organizations in the collection of field data, whenever practical and economical.

c) To ensure continuity in the participation of observers by providing timely information and services to volunteers in the form of personal outreach, newsletters, and online tools for training and data exploration.

II. Sampling Design: Generalized Random Tessellation Stratified (GRTS)

Rationale for Selecting GRTS

A GRTS sample design provides a flexible alternative to random sampling and systematic sampling (Stevens and Olsen 2004). It incorporates randomization in site selection, but avoids clustering of sites or gaps in coverage. In addition to spatial balance and a foundation in probabilistic design, GRTS offers the opportunity to intensify sampling within certain strata (e.g., management units) without deviation from the regional design. As a result, inferences can be made at multiple spatial scales. With GRTS, it is also possible to add new sites over time. This need could arise if montane fir-spruce colonizes alpine tundra in response to warming temperatures, if the entire breeding range shifts to the north, or if timber management generates new habitat outside of the currently occupied range.

Sample Frame

The Mountain Birdwatch sample frame will consist of hundreds of disjunct land units that could contain Bicknell's Thrush habitat in the northeastern United States, Quebec, and the Canadian Maritimes. These areas generally occur at lower elevations with increasing latitude (Lambert et al. 2005), most likely due to effects of growing-season temperature on the extent of balsam fir and red spruce (Cogbill and White 2001). The moderate, maritime climate may also influence the distribution of Bicknell's Thrush, which occurs at lower elevations in southwestern Quebec than at comparable latitudes in Atlantic Canada (VCE, unpubl. data). An ongoing modeling exercise will use elevation, latitude, longitude, and climatic data to delineate the boundaries of habitable land units based on GIS analysis of all available, geo-referenced Bicknell's Thrush observations made on the breeding grounds since 2001. Forest composition and structure will not be a considered in the delineation of the sample frame, as forests are dynamic in the survey area and are expected to change over time. Nonetheless, balsam fir and red spruce are expected to dominate the sample frame in varying proportions, with hardwoods gaining prominence at lower elevations and in some recently disturbed areas.

In order to implement safe, efficient, and cost-effective surveys within this densely forested and mountainous region, it will be necessary to restrict survey locations to hiking trails and logging roads. We will therefore lay a trails-roads layer over the coverage described above, select sites from these access routes, and limit statistical inference to adjacent forests. However, because mountain trails do not appear to influence the abundance or detectability of target species (DeLuca and King unpubl. data), results could be used to model habitat beyond the access corridors. To further evaluate the assumption that trail-based counts yield representative data, it will be necessary to test for habitat or topographic biases in the location of survey stations within the greater sample frame.

Selecting Sites, Locating Stations, and Defining Sample Units

For the GRTS selection process we will lay a grid with cell dimensions of between 1 km and 2 km across the entire breeding range of Bicknell's Thrush. GRTS will generate an ordered list of grid cells from the region. The actual cell dimensions may depend on computational limits. Cells

that contain publicly accessible trails or roads will qualify for inclusion in the sample. If a cell is selected, a survey station will be established at the midpoint of the longest intersecting trail or road segment. Up to three additional survey stations will be placed on trails or roads at 250 horizontal meters in both directions from this point, for a standard route length of six stations. Fewer than six stations will be established in high-elevation units that are not large enough to support the standard number. If historically monitored survey stations exist on a selected trail or road segment, then an effort may be made to align new points with previously surveyed locations, provided that the distance between points is at least 200 horizontal meters. Such decisions will be made jointly by the regional program managers, on a case-by-case basis. See Standard Operating Procedure (SOP) #3 for additional details regarding placement of survey routes.

There is some concern that the use of a unified sample frame across conserved and managed areas may compromise efficiency, particularly if a significant proportion of monitoring effort occurs in areas that have been recently clear-cut and are thus unlikely to yield Bicknell's Thrush detections. While failing to detect the flagship species in a given area over an extended period may prove difficult, the resulting zeroes are essential for reliably estimating trend and for modeling populations in an occupancy framework. The issue of persistent non-detections is not unique to harvest zones, but will also occur in mature conifer forests with little understory and in hardwood stands within a conifer-dominated matrix. In all three cases, habitat suitable for Bicknell's Thrush may appear in time. Furthermore, continuous monitoring of these areas will produce detections of target species more likely to use areas than Bicknell's Thrush.

If insights gained through sample selection and/or preliminary site visits do not ease the concern about uniform monitoring of managed and conserved lands, then the Protocol Development Team may consider: a) stratifying by management class and dedicating some reduced level of effort (e.g., abbreviated counts or multi-year sampling intervals) to areas managed for timber; b) establishing decision rules that weight against selecting timberlands or c) using a less costly sampling strategy (e.g., multistage cluster sampling) on managed lands. However, each of these approaches would limit Mountain Birdwatch's ability to describe the status and dynamics of target populations, as a whole, through erosion of continuity, power, and/or precision. Regardless, efforts to conserve Bicknell's Thrush would be well served by research into the effects of forestry that is integrated with the Mountain Birdwatch survey design and protocol.

For most analyses of occupancy and abundance, each station will be treated as an independent sample. If a chosen statistical method is especially sensitive to spatial autocorrelation, it will be possible to subsample stations from routes (e.g., at 500-m intervals) and/or use models that account for dependence among data gathered at neighboring stations (e.g., hierarchical models). Mountain Birdwatch routes are not considered to be suitable sample units for analyses of occupancy and abundance because many cross sharp gradients of elevation, habitat and climate.

Sample Size Requirements

MacKenzie and Royle (2005) provide a formula for estimating the number of sites to survey in order to achieve maximum efficiency for modeling occupancy, given optimal number of repeat sampling occasions and a program-specific precision target. Based on this formula, our

rangewide occupancy precision target for Bicknell's Thrush (95% confidence interval ≤ 0.2) may be met with 167 or fewer stations. For a variety of reasons, we do not expect to consistently achieve the optimal number of repeat sampling occasions, however this number is well below the demonstrated capacity of Mountain Birdwatch partners to complete annual surveys (approximately 900 stations completed per year by Vermont Center for Ecostudies and Bird Studies Canada combined, not including biennial surveys by the U.S. Forest Service in the White Mountain National Forest and annual distribution surveys by the Canadian Wildlife Service).

Frank Rivera analyzed 2008 pilot data collected at 456 points throughout the survey region to determine how many points are needed to achieve a CV ≤ 0.2 on an annual estimate of Bicknell's Thrush density. Based on encounters with Bicknell's Thrush at 140 points, he found that 400-700 stations would be sufficient to meet this precision target (Fig. 2).

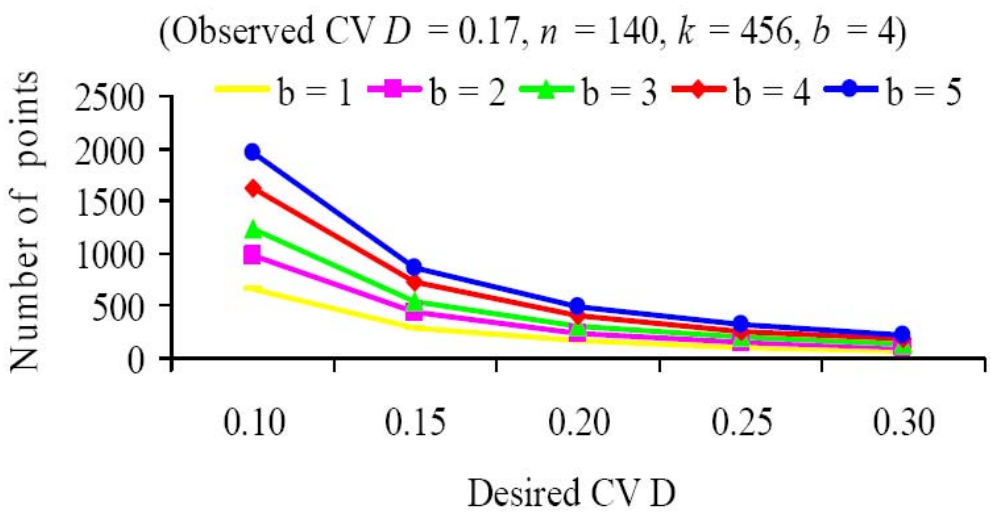

Figure 2. Number of points needed (*k*) to achieve coefficients of variation (CV) between 0.10 and 0.30 on an annual estimate of Bicknell's Thrush density (D). n = number of points with Bicknell's Thrush detections; *b* = a dispersion parameter describing the degree of clumping of individuals.

Rivera also produced a first approximation of the number of years needed to meet Mountain Birdwatch's power and precision targets for trend analysis, based on an exponential regression model. His results indicate that the sampling effort made in 2008 would be sufficient to: a) achieve 80% power to detect a 3% annual change in Bicknell's Thrush abundance over 30 years at a significance level of 0.1; and b) to maintain a CV about the regression line ≤ 0.40 for a Bicknell's Thrush population trend estimated over a period 30 years. If untested assumptions about the regression are met, then an annual 3% decline could be detected with an satisfactory level of precision in just 14-21 years (Table 3).

Table 3. Number of years needed to detect a 3% annual decline with a CV about the regression between 0.1 and 0.5. N = population size and r = rate of change.

- Exponential trend
- CV constant with N
- t distribution
- $\alpha = 0.1$, 1-tailed test
- $1 - \beta = 0.8$

$$N_i = N_1(1-r)^{i-1}$$

$$rN_i$$

CV about regression	0.1	**0.2**	**0.3**	**0.4**	0.5
Years (n)	9	**14**	**17**	**21**	24

These results indicate that it will be possible to meet our regional monitoring objectives within current capacity. It will also be possible to intensify effort within certain political and/or management units in order to meet subregional power or precision targets and/or to address management and conservation concerns that are especially acute within certain portions of the survey region (e.g., climate change in the Catskills and forestry in New Brunswick).

Frequency and Timing of Sampling

Stations will be sampled once a year between June 1 and June 21 in the U.S. and between June 4 and June 25 in Canada. These periods correspond with the height of breeding and vocal activity for migratory songbirds in the Atlantic Northern Forest. Surveys will start 45 min before local sunrise. Each station will be surveyed for a total of 20 min, allowing for surveys to be completed by 0800 local time.

III. Field Methods

Field Season Preparations, Field Schedule, and Equipment Setup

Regional program managers will assign each survey route to a volunteer or staff person who has demonstrated proficiency in identification of the target species. All observers will review the field manual, training video and training CD prior to heading into the field. Each route will be surveyed by a single observer, though a companion is recommended to ensure safety. Annual training sessions will be offered to new and experienced observers.

Observers will make certain that all of the equipment and supplies listed in SOP #2 (Field Season Logistics) are organized and ready for the field season. Each year, regional program managers will provide fresh copies of the field datasheets (SOP #4, Conducting the Bird Survey) to each observer.

Documenting Survey Locations

The survey locations will be plotted in GIS. During the program's first year, hired technicians will use permanent landmarks and digital photos to document each survey location in the field. Where permission is gained, technicians will use permanent markers, such as firetacks, to mark each survey location. Point descriptions, geographic coordinates, photos, and a field map will be provided to observers to facilitate location of the same survey locations from year-to-year. Observers will be strongly encouraged to scout their route prior to conducting the survey for the first time at a given site.

Protocol Development

The Mountain Birdwatch Protocol Development Team considered the advantages and disadvantages of a variety of survey techniques, including simple counts, repeated simple counts, distance sampling, double observer, double sampling, time-of-removal, time-of-detection, and repeated "presence-absence" (actually, detection-nondetection) surveys in an occupancy framework. Our deliberations were informed by results of previous high-elevation bird surveys (Lambert 2005, Campbell et al. 2007, King et al. 2008) and investigations of Bicknell's Thrush habitat selection (Campbell and Whittam 2006, Connolly et al. 2002, Frey 2008, Hale 2006), home range characteristics (Collins 2007 and Rimmer et al. 2001), vocalization rates (Rimmer et al. 1996, Ball 2000), and detectability (Frey 2008, DeLuca unpubl. data, Aubry unpubl. data). The emerging literature on sources of observer error and bias also proved useful in the development of this protocol (Alldredge et al. 2007a, b, c; Rosenstock et al. 2002; Simons et al. 2007).

Our intent was to develop methods that: ensure a variety of options for analysis, incorporate an understanding of the ecology and behavior of the target species, and correspond with the capacity of observers to collect reliable information.

These methods take into account six fundamental considerations.

1. It is not feasible to consistently complete more than one survey per route per year due to the remote location of sampled habitat, the unpredictable nature of mountain weather, and the scheduling constraints of volunteer observers.
2. Available volunteer and coordination resources make it possible to recruit and maintain a single observer per route, but they are not sufficient to ensure two observers per route on an annual basis.
3. Dense subcanopy structure and high topographic relief make it difficult to determine the position of individual birds in most mountain forests. Observers rarely detect birds visually in this habitat. Obscuring, ground-level clouds and audio-interference from wind often magnify the challenge. These conditions call for conservative use of distance estimation.
4. Previous studies of Bicknell's Thrush detectability in New Hampshire (W. DeLuca unpubl. data) and Quebec (Y. Aubry unpubl. data) indicate that 10-min sampling periods are necessary to achieve detection rates ≥ 0.7 during the breeding season. High detection

rates are important for achieving reasonable precision in occupancy estimation (MacKenzie et al. 2006).

5. The occupancy framework requires "presence-absence" information from a minimum of two samples. Obtaining these replicates spatially is problematic because many survey routes will cross steep gradients of elevation and habitat. A protocol that permits temporal replication within a single visit is needed.
6. Surveying for more than 20 min per station raises concerns about failing to detect Bicknell's Thrush in small, sparsely occupied sample units, where vocal activity can be limited to a brief pre-dawn period. In such instances, investing more time at one point may result in a preponderance of false negatives at subsequent points (zero counts when a nonvocal bird is present). There is additional concern that sampling for more than 20 min per station could exceed the limits of observer concentration and might discourage the participation of volunteers and partnering institutions.

Mountain Birdwatch protocols aim to balance a theoretically ideal approach with these practical constraints in order to ensure the continuity and quality of survey results.

Summary of Pilot Season

Two protocol options were piloted by volunteer observers, hired technicians, and staff in June 2008. One protocol consisted of monitoring all target species using repeated simple counts with a concurrent, time-of-detection protocol for monitoring Bicknell's Thrush (protocol A). The second protocol consisted of "presence-absence" surveys for all target species concurrent with a time-of-detection protocol for Bicknell's Thrush (protocol B). Both protocols used three distance bands for Bicknell's Thrush (0-25 m, 25-50 m, and > 50 m) and two distance bands for all other species (< 50 m and > 50 m). The tradeoffs associated with each protocol were analyzed based on the survey results and feedback from observers. Brian Mitchell, Jason Riddle, and Frank Rivera analyzed the results using occupancy, time-of-detection, and distance estimation methods. Covariates included in analysis were observer type, protocol type, wind, time of day, date, distance, and elevation above a latitude-dependent threshold (Lambert et al. 2005). Time-of-detection, repeated counts, repeated "presence-absence" surveys, and distance sampling yielded similar estimates of density (Table 3).

Table 4. Density estimates for Bicknell's Thrush based on 2008 pilot data.

Field method	Density (BITH/ha)	95% CI
Time of detection	0.44	0.40-0.48
Repeated counts	0.33	0.29-0.38
Repeated p/a	0.39	0.37-0.42
Distance sampling	0.37	0.26-0.50
Composite range	0.33-0.44	0.26-0.50

Detectability estimates of all species were generally good (> 0.25 per 5-minute period). Bicknell's Thrush detectability for a count of 10 min was estimated at 0.91 using time-of-detection methods and 0.81 using distance-sampling. Occupancy for Bicknell's Thrush was

dependent upon elevation, time of day, and observer (technician vs. volunteer). Occupancy estimates and associated covariates are presented for all target species in Table 4.

Table 5. Occupancy estimates and important covariates for all target species based on 2008 pilot data.

Species	Important covariates	Psi 95% CI
BCCH	Wind	0.02 – 0.07
BITH	Elevation, Time (+/- 5 AM), Observer	0.30 – 0.46
BLPW	Elevation, Observer	0.78 – 0.89
BOCH	Protocol, Observer, Time (+/- 5 AM)	0.07 – 0.14
FOSP	NONE	0.07 – 0.13
HETH	Elevation	0.07 – 0.19
SWTH	Protocol, Date, Time (+/- 5 AM)	0.85 – 0.98
WIWR	(Elevation), Time	0.69 – 0.84
WTSP	(Elevation), (Protocol), Time (+/- 6 AM)	0.79 – 0.87
YBFL	Observer, Time (+/- 5 and 7 AM), Wind	0.42 – 0.66

Observers in the U.S. also submitted an evaluation form with their survey results. They used a scale of 1 to 5 indicate their level of agreement with several positive statements regarding the protocol (1 = agree to 5 = disagree) (Table 6). Responses were generally favorable from testers of both pilot protocols (A and B). In fact, testers of both protocols were equally likely to remain a Mountain Birdwatch volunteer despite a distinct difference in protocol complexity. Table 6 shows a summary of observer feedback provided through the questionnaire.

Table 6. Results of a survey issued to observers following the field-testing of pilot protocols in 2008. Ratings represent the average score based on a scale of 1 (agree) to 5 (disagree).

Statement	Repeated Simple Counts (n=28)	Presence/Absence (n=25)
Rationale for creating a new protocol was clearly explained	1.92	1.52
Written instructions for conducting the protocol are clear	1.84	1.32
Video demonstration was clear and helpful	1.68	1.73
Field datasheets are easy to use	1.65	1.44
Home datasheets are well-organized and allowed for easy transcription	1.75	1.65
The additional five target species can be learned with reasonable effort	1.50	1.28
The target species bird survey is not so difficult as to reduce the accuracy of the observations	1.80	1.17
The Bicknell's Thrush protocol can be conducted concurrent with the target species bird survey without loss in the quality of data collected	1.76	1.73
The cone count protocol is straightforward and easy to conduct	2.12	2.00
I was able to maintain concentration for the full 20 minute period	2.12	1.88
The time to fill in field and home datasheets is reasonable	1.56	1.38
I will continue to participate in Mountain Birdwatch if these protocol changes are made	1.42	1.38

A thorough evaluation of the statistical analyses, observer feedback, and programmatic goals was undertaken to come to final agreement on a regionally coordinated protocol. The final protocol consists of a time-of-detection protocol for Bicknell's Thrush (each individual is tracked on a minute-by-minute basis during the first ten minutes of the survey), concurrent with four 5-min repeated counts for all target species. This is the same as 2008 pilot protocol A with the addition of a fourth distance band for Bicknell's Thrush detections in the first 10 minutes (50-100 m).

Conducting the Bird Survey

Detailed instructions for conducting the bird survey are provided in SOP #4.

Repeated Simple Counts
The observer conducts four consecutive 5-min counts over a total sampling period of 20 min. During each 5-min interval, all individuals of the target species will be recorded. To reduce the risk of counting the same individual twice, a field card will be used to map the approximate location of each individual and its observed or presumed movements. Observers will map the position of birds in relation to a 50-m radius and use codes to denote whether individuals are detected by hearing (h) or visually (v). Movements of individual birds will be noted with arrows, especially if the individual crosses a distance threshold. A fresh field card will be used for each 5-min interval to minimize dependence between repeat sampling events.

Bicknell's Thrush Protocol
The observer collects additional information on Bicknell's Thrush during the first ten minutes of the 20-min sampling period (see Figure 2). Using a field card, the observer will map the approximate location of each individual within four distance categories (0-25 m, 25-50 m, 50-100 m, and >100 m), as well as its observed or presumed movements. In addition, the observer will note every minute within which each Bicknell's Thrush was detected and the corresponding form of detection (h or v). Bicknell's Thrush will be recorded in the same manner as the other target species during the second half of the 20-min sampling period.

Figure 3. Schematic diagram for Bicknell's Thrush Protocol nested within Repeated Simple Counts.

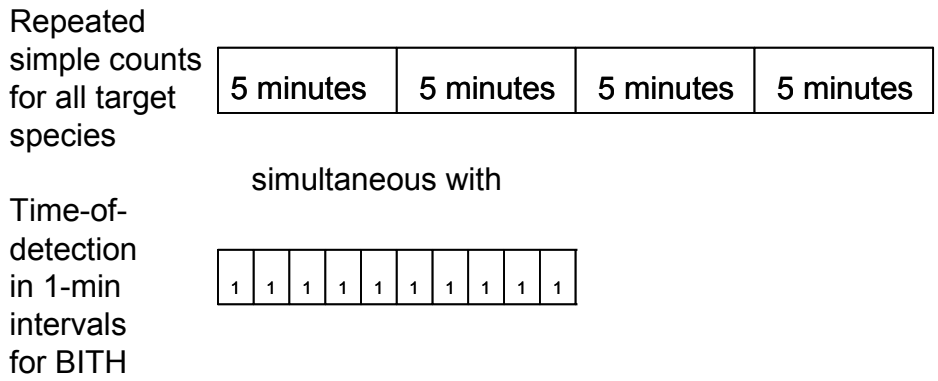

Collecting Habitat, Environmental, and Observer Data

We will gather information on a variety of biotic and abiotic variables in order to: a) relate avian abundance and occupancy to habitat, topographic, and climatic characteristics; and b) relate temporal changes in abundance and occupancy to changes in the environment that occur naturally or as a result of anthropogenic activity. Hired technicians will use standardized methods to measure habitat and physical features at all survey stations within the first five years of the program and at subsequent 10-year intervals. GIS models of climate, mercury exposure, calcium availability, and landscape structure will provide additional data for analysis. In addition, we will record select survey and observer data and model their effects, as appropriate, on the primary response variables (abundance / density and occupancy).

The list of potential covariates presented in Table 7 was derived from previous studies of mountain bird ecology and point count methodology. Each individual test will call for a unique set of covariates, depending on the analysis technique and the underlying question and/or hypothesis. In most cases, it will be appropriate to select a small set of covariates for inclusion in the analysis. However, it may sometimes be appropriate to incorporate more covariates by using composite indices, grouping variables in smaller analyses (e.g., principal components analysis), or utilizing analytical methods that can handle a large number of covariates simultaneously (e.g., random forest analysis). Refer to SOP #5 for additional background, methods, and data sources.

Table 7. Covariates to be considered for use in Mountain Birdwatch data analysis.

Class	Covariate	Class	Covariate
Biotic (habitat)	Land cover class (from GIS)	Abiotic (climatic)	Mean daily temp – growing season
	Canopy composition		Mean night-time temp – nesting season
	Canopy height		Mean precipitation – nesting season
	Canopy closure		El Niño Southern Oscillation Index
	Live tree basal area (by species)	Abiotic (chemical)	Foliar calcium (index of available Ca)
	Dead tree basal area		Calcium in leaf litter and soil
	Subcanopy composition		Concentration of mercury deposits
	Subcanopy height		Mercury in leaf litter and soil
	Shrub density (by species)	Abiotic (land use)	Human disturbance (categorical)
	Shrub dominance (by species)	Survey effects	Date
	Ground cover (moss, litter, rock)		Time of day
Biotic (landscape)	Area of high-elevation land unit		Cloud cover
	Isolation of unit		Wind speed
	Land-cover composition of unit		Precipitation
	Area of broadleaf forest in Hispaniola		Noise level (streams, planes, etc.)
Biotic (wildlife)	Bicknell's Thrush abundance	Observer effects	Volunteer vs technician
	Swainson's Thrush abundance		Age
	Red squirrel abundance		Skill level
	Balsam fir cone mast		Experience with protocol
Abiotic (physical)	Elevation		
	Slope		
	Aspect		
	Latitude/longitude		
	Topographical index		

End-of Season Procedures

All field equipment will be maintained and repaired or replaced prior to storage in a secure location.

When applicable, leaf litter, foliage and soil samples will be catalogued and preserved in a freezer as soon after collection as possible. When funding permits, they will be sent to a university-based research laboratory where they will be analyzed for mercury and calcium content following standard laboratory procedures.

Procedures for data transcription, entry, and verification are described below.

IV. Data Handling, Analysis, and Reporting

Overview of Database Design

A geographically-referenced database will be used to archive and manage survey results, with fields that correspond with the standardized schema of the Avian Knowledge Network (AKN; htt://avianknowledge.net). Data may be accessed directly through AKN or via the Northeast Avian Data Center (NADC; http://akn.nebirdmonitor.org), a regional node to the AKN that serves the particular data management needs of the Northeast Coordinated Bird Monitoring Partnership. AKN features a secure, persistent data archive with owner-specified access and innovative data display capabilities (spreadsheets, tables, charts and maps). The AKN is also building tools for exploratory analysis of observational data via data mining and machine-learning techniques. These tools reveal spatial and temporal patterns of avian distribution and abundance based on the query of millions of bird records and hundreds of environmental, climatic, and human demographic variables. The opportunity to retrieve and explore the data will enable land stewards to make more informed decisions. It will also help maintain the interest and commitment of volunteer observers, who can go online and view their field observations in a variety of formats.

The database for Mountain Birdwatch version 2.0 is based on the original Mountain Birdwatch relational database which was aligned with the AKN in the fall of 2007, and the pilot database used to manage data collected in the 2008 pilot season. The database is composed of tables containing information on: observers; route-level and point-level geographic, habitat, and climate variables; count results (simple counts and time-of-detection data); cone mast index information; survey information; and species information.

Metadata Procedures

Mountain Birdwatch metadata complies with standards of the USGS National Biological Information Infrastructure and AKN. This detailed record of program goals, scope, methods, and provenance will be available through the AKN website in the fall of 2009.

Data Transcription, Entry, and Verification

Observers will check datasheets for completeness immediately following the field survey. Upon return from the field, they will be encouraged to take the earliest opportunity to transcribe results into tables designed to facilitate data entry. This datasheet will also be checked for accuracy and completeness prior to submission to regional program managers. Volunteers or staff of coordinating institutions will review the field records and enter observations into the Mountain Birdwatch database as close to the date of receipt as possible.

We are working towards making an online data entry portal where observers can enter their own data. Discussions have been initiated with NatureCounts, the Bird Studies Canada node of AKN (http://www.birdscanada.org/birdmon//), and the USGS Bird Point Count Database (http://www.pwrc.usgs.gov/point/).

Data verification is necessary to ensure that values recorded on the field datasheets are entered into the database correctly. Several steps will be taken prior to, during, and after data entry to verify data, including visual review at the time of data entry, visual review after data entry, and the development of summary queries and tallies in the database. Additionally, the database entry form itself will incorporate features that reduce data entry errors, such as dropdown menus for site name, observer, weather, and species codes. These values may also be entered using the keyboard, but must conform to the codes listed in related tables (i.e., referential integrity will be enforced).

Data Archival Procedures

The database will be housed on a secure server and backed up by the regional program managers on a regular basis. Survey timing, location, species, and count data will be uploaded annually to the Avian Knowledge Network. Habitat data and other information that does not conform with existing AKN fields will be archived with AKN's Northeast Avian Data Center (http://akn.nebirdmonitor.org). Access to Mountain Birdwatch data via AKN or the regional node will be subject to the approval of the coordinating institutions.

Recommendations for Statistical Analysis

The appropriate statistical procedure will depend on several factors, including: the goals of the analysis, the length of the time series, the number of missing values, the distribution of count data, and the temporal and spatial scales of interest. It is also important to consider the strength of underlying assumptions regarding inference (statistical and biological) and independence.

The count protocol was designed to permit estimates of abundance through a variety of analytical approaches, which account for various aspects of detectability, including: P_p = probability of bird being present in sample area during the count, P_a = probability of bird being available for detection, and P_d = probability of bird being detected given availability (Table 8). The flexibility is designed to enable comparisons among different abundance estimation techniques and to maintain the opportunity to apply analytical techniques that will be developed in the future.

Table 8. Count / analysis methods for estimating bird abundance and probabilities included in the detection function of each.

Method	Citation	Included in the detection function
Simple counts (index method)	Bart et al. 2004	none
Repeated "presence-absence" surveys	Royle and Nichols 2003	NA
Repeated simple counts	Kery et al. 2005	P_p, P_a, P_d
Time-of-removal	Farnsworth et al. 2002	P_a, P_d
Time-of-detection	Alldredge et al. 2007c	P_a, P_d
Distance sampling	Rosenstock et al. 2002	P_d
Time-removal and distance sampling combined	Farnsworth et al. 2005	P_a, P_d

Beyond these techniques for estimating abundance, three basic modeling approaches are expected to meet most of Mountain Birdwatch's information needs. These are: hierarchical models to estimate changes in abundance (trend) (Link and Sauer 2002); single-species, multiple-season occupancy models to estimate occupancy, colonization, and extinction (MacKenzie et al. 2006); and random forest analysis (Breiman 2001) to relate abundance and occupancy estimates to a host of biotic and abiotic variables. Many other tests are available in a field that is rapidly evolving. Therefore, the selection of an analysis method at any given juncture should be made in consultation with quantitative ecologists and/or biostatisticians who are familiar with recent advances.

Options for incorporating covariates into analyses of trend, occupancy, and abundance are presented in Table 7.

Recommended Reporting and Evaluation Procedures

Regional program managers will collaborate on two types of reports, Annual Updates and periodic Analysis and Synthesis Reports. The format for reports will follow scientific writing conventions and include assessments of the conservation significance of the results and overall progress toward achieving monitoring and programmatic objectives. Reports aimed at volunteer observers will use less technical language but still provide an overview of results with acknowledgment of volunteer contributions. Most reporting effort should be dedicated to timely publication of peer-reviewed articles. Evaluation of the program, which is inherent in the process of grant competition and editorial review, will be formally solicited from the U.S. Fish and Wildlife Service Population and Habitat Assessment Branch, the NABCI Monitoring Subcommittee, and the Canadian Wildlife Service of Environment Canada at ten-year intervals. For more detail on reporting procedures, refer to SOP #8.

V. Personnel Requirements and Training

Roles and Responsibilities

Partnering Organizations and Agencies
This international protocol is primarily designed for implementation by the Vermont Center for Ecostudies and the White Mountain National Forest in the U.S. and by Bird Studies Canada and

the Canadian Wildlife Service in Canada. The participation of additional partners is gratefully appreciated and may be necessary to sustain the effort. Eventually, interest from the National Park Service, the Appalachian Trail Conservancy, and the Appalachian Mountain Joint Venture may enable an extension of Mountain Birdwatch south along the Appalachian Mountains to Georgia. This expansion will require modifications to account for geographic differences in priority species and management issues. Such changes will be designed by a protocol development team from the central and southern Appalachians, with implementation by a technically qualified institution.

Each lead organization / agency is expected to conduct Mountain Birdwatch surveys on the core set of sites under its purview on an annual basis. This requires that each partner secures funding to coordinate surveys within its region. The lead organizations may also collaborate on proposals to obtain support for range-wide implementation. Partners are expected to enter data in a timely manner and participate in the drafting of annual updates and periodic analyses.

Regional Program Managers
Regional program managers, representing the lead organizations, will oversee Mountain Birdwatch. Responsibilities of the program manager include: recruiting observers, hiring seasonal technicians, providing training and materials to volunteers and staff, conducting field surveys, supervising data entry, analyzing the data, reporting results, and securing funding.

Field Technicians
Field technicians will be hired in 2009 to document survey locations and collect baseline bird data. Within the first five years of the program, field technicians will be hired to collect habitat data. Every ten years afterward, regional program managers will hire technicians to repeat the habitat measurements in order to monitor changes over time.

Volunteer Observers
Beginning in 2010, trained volunteers will conduct most Mountain Birdwatch surveys in the U.S. Because of low population densities in Nova Scotia and New Brunswick, Bird Studies Canada staff may perform most of the monitoring in Atlantic Canada. Volunteer and paid observers on both sides of the border are responsible for being fully prepared to conduct the protocol and are expected to submit data in a timely manner.

Quantitative ecologists and statisticians
Partners with expertise in statistical methods will provide continuing support with data analyses, as needed. The lead organizations and agencies acknowledge that payment for analytical services may sometimes be required. In some cases, the reward may take the form of access to data for methodological investigations.

<u>Qualifications</u>

The regional program managers must be proficient at or contract with others to: (1) train observers, (2) hire and supervise paid technicians, (3) implement the study protocol in the field, (4) supervise data entry and conduct quality assurance, (5) analyze the data, (6) report results, (7) give public lectures, and (8) secure funding.

Field technicians must be able and willing to spend extended periods of time in remote areas. They must be able to identify the common high-elevation birds by sight and sound. Technicians should be comfortable working in extreme conditions and able to maintain a good attitude while doing so. They should be able to navigate with a GPS, map, and compass. Technicians hired to collect habitat data should have prior experience taking vegetation measurements in the field.

All observers must be physically capable of hiking in remote locations and able to identify the ten target species by sight and sound. Observers should also be able to record field observations accurately and legibly.

Training Procedures

Training procedures for volunteer observers and paid technicians are detailed in SOP #2. All observers will be provided with an audio training guide to assist in learning the sounds of the target species and other common high-elevation birds. The manual will include instructions on how to conduct the survey, use a map and compass, and identify high-elevation landbirds. Public lectures and training sessions will provide an opportunity for observers to review the protocol and ask questions. For those unable to attend a training session, an instructional video will be available on the Internet. Program managers will also be available to assist observers by phone and email throughout the survey period.

VI. Annual Workload and Schedule

Annual Workload

Successful implementation of Mountain Birdwatch will require program managers to dedicate up to 50% of their time to volunteer coordination and training, survey implementation, data management, and communication with key audiences. Grant writing, data analysis and publications could demand another 50% full-time equivalency, depending on the role of collaborators in this work. Technicians hired to collect baseline bird and habitat data will work full-time during the month of June. Volunteer observers will spend approximately ten hours driving and hiking to their adopted route and conducting the survey, plus another two hours transcribing and error-checking data.

Schedule

Program managers will have responsibilities year-round for the successful implementation of Mountain Birdwatch (Table 9). Recruiting of observers begins at the start of the calendar year and continues through the survey period. Materials are distributed in April, followed by training sessions in May. Surveys are conducted in June, after which observers should be reminded to submit their data in a timely manner. Data entry, analysis, and reporting make up the bulk of the second-half of the year. Fundraising and public lectures are done throughout the year, as necessary.

Table 9. Annual schedule of Mountain Birdwatch.

Month	Tasks
January	Public talks, data analysis and reporting
February	Public talks, data analysis and reporting, recruit volunteers
March	Recruit observers
April	Distribute materials
May	Hold training sessions
June	Field surveys
July	Data entry and verification
August	Data entry and verification
September	Data entry and verification, public talks, data analysis and reporting
October	Data entry and verification, public talks, data analysis and reporting
November	Data entry and verification, public talks, data analysis and reporting
December	Submit data to AKN

VII. Acknowledgments

We gratefully acknowledge Cedric Alexander, Laura Deming, Fred Dieffenbach, Steve Faccio, Sarah Frey, Michale Glennon, and Rob Hoelscher for their participation in the Mountain Bird Working Group of the Northeast Coordinated Bird Monitoring Partnership. Sarah Frey, Melinda Knutson, Ed Laurent, Steve Matthews, Rua Mordecai, and Brian Sturtevant provided helpful comments on an earlier version of this protocol. Funding for the development of this protocol was provided by the Sport Fish and Wildlife Restoration Programs of the U.S. Fish and Wildlife Service through a grant to American Bird Conservancy and the Northeast Coordinated Bird Monitoring Partnership. Additional support came from the U.S. Fish and Wildlife Service Division of Migratory Birds, the National Park Service's Inventory and Monitoring Program, the Northeast Regional Conservation Needs Grant Program, and the Vermont Fish & Wildlife Department under the State Wildlife Grant Program. This protocol was prepared to support implementation of a priority action of the State Wildlife Action Plans from members of the Northeast Association of Fish and Wildlife Agencies. The views and conclusions contained in this document are those of the authors and should not be interpreted as representing the opinions or policies of the U.S. Government. Mention of trade names or commercial products does not constitute their endorsement by the U.S. Government.

VIII. References

Alldredge, M. W, T. R. Simons, and K. H. Pollock. 2007a. A field evaluation of distance measurement error in auditory avian point count surveys.

Alldredge, M. W, T. R. Simons, and K. H. Pollock. 2007b. Factors affecting aural detections of songbirds. Ecological Applications 17(3):948–955.

Alldredge, M. W, T. R. Simons, K. H. Pollock, and K. Pacifici. 2007c. A field evaluation of the time-of-detection method to estimate population size and density for aural avian point counts. Avian Conservation and Ecology – Écologie et conservation des oiseaux 2(20):13. [online] URL: http://www.ace-eco.org/vol2/iss2/art13/

Atwood, J. A., C. C. Rimmer, K. P. McFarland, S. H. Tsai, and L. N. Nagy. 1996. Distribution of Bicknell's Thrush in New England and New York. Wilson Bulletin 108:650–661.

Ball, M. 2000. Vocal behaviour of Bicknell's Thrush (*Catharus bicknelli*). Master's thesis. Dalhousie University, Halifax, Nova Scotia.

Bart, J., S. Droege, P. Geissler, B. Peterjohn, and C. J. Ralph. 2004. Density estimation in wildlife surveys. Wildlife Society Bulletin 32:1242–1247.

Beckage, B., B. Osborne, D. G. Gavin, C. Pucko, T. Siccama, and T. Perkins. 2008. A rapid upward shift of a forest ecotone during 40 years of warming in the Green Mountains of Vermont. Proceedings of the National Academy of Sciences 105:4197–4202.

Breiman, L. 2001. Random Forests. Machine Learning 45:5–32.

Breiman, L., J. H. Friedman, R. A. Olshen, and C. J. Stone. 1984. Classification and regression trees. Wadsworth Publishing, Belmont, California.

Campbell, G., and B. Whittam. 2006. Bicknell's Thrush habitat in Nova Scotia's industrial forest: final report to the Nova Forest Alliance and Stora Enso Port Hawkesbury, Ltd. Unpublished Report. Bird Studies Canada (Atlantic Region), Sackville, New Brunswick. 17 pp.

Campbell, G., B. Whittam, and G. Robertson. 2007. High Elevation Landbird Program 5-year report. Unpublished Report. Bird Studies Canada (Atlantic Region), Sackville, New Brunswick. 16 pp.

Cogbill, C. V. and P. S. White. 1991. The latitude-elevation relationship for spruce-fir forest and treeline along the Appalachian mountain chain. Vegetation 94:153–175.

Collins, B. B. 2007. Spatial Analysis of Home Range, Movement Patterns, and Behavioral Ecology of Bicknell's Thrush, Catharus bicknelli, in Vermont. Master's thesis. Antioch University, Keene, New Hampshire.

Connolly, V., G. Seutin, J.-P. L. Savard, and G. Rompré. 2002. Habitat use by Bicknell's Thrush in the Estrie Region, Québec. Wilson Bulletin 114:333–341.

COSEWIC 1999. COSEWIC assessment and status report on the Bicknell's thrush *Catharus bicknelli* in Canada. Committee on the Status of Endangered Wildlife in Canada. Ottawa. v + 43 pp.

Farnsworth, G. L., J. D. Nichols, J. R. Sauer, S. G. Fancy, K. H. Pollock, S. A. Shriner, and T. R. Simons. 2005. Statistical approaches to the analysis of point count data: a little extra information can go a long way. USDA Forest Service General Technical Report PSW–GTR–191:735–743.

Farnsworth, G. L., K. H. Pollock, J. D. Nichols, T. R. Simons, J. E. Hines, and J. R. Sauer. 2002. A removal model for estimating detection probabilities from point-count surveys. Auk 119:414–425.

Frey, S. J. K. 2008. Metapopulation dynamics and multi-scale habitat selection of a montane forest songbird. Master's thesis. University of Vermont, Burlington, Vermont.

Gauthier, J., and Y. Aubry. 1996. The Breeding Birds of Quebec: Atlas of the Breeding Birds of Southern Quebec. Province of Quebec Society for the Protection of Birds and Canadian Wildlife Service, Montreal.

Graveland, J., and R. vanderWal. 1996. Decline in snail abundance due to soil acidification causes eggshell defects in forest passerines. Oecologia 105:351–360.

Hale, S. R. 2006. Using satellite imagery to model distribution and abundance of Bicknell's Thrush (*Catharus bicknelli*) in New Hampshire's White Mountains. Auk 123:1038–1051.

Hames, R. S., K. V. Rosenberg, J. D. Lowe, S. E. Barker, and A. A. Dhondt. 2002. Adverse effects of acid rain on the distribution of the Wood Thrush (*Hylocichla mustelina*) in North America. Proceedings of the National Academy of Sciences of the United States of America 99:11235–11240.

Kery, M., J. A. Royle, and H. Schmid. 2005. Modeling avian abundance from replicated counts using binomial mixture models. Ecological Applications 15:1450–1461.

King, D. I., J. D. Lambert, J. P. Buonaccorsi, and L. S. Prout. 2008. Avian population trends in the vulnerable montane forests of the northern Appalachians, USA. Biodiversity Conservation 17:2691-2700.

Lambert, J. D., D. I. King, J. P. Buonaccorsi, and L. S. Prout. 2008. Decline of a New Hampshire Bicknell's Thrush Population, 1993-2003. Northeastern Naturalist 15:607-618.

Lambert, J. D., K. P. McFarland, C. C. Rimmer, S. D. Faccio, and J. L. Atwood. 2005. A practical model of Bicknell's Thrush distribution in the northeastern United States. Wilson Bulletin 117:1–11.

Lambert, J. D. 2005. Mountain Birdwatch 2004: Final report to the U.S. Fish and Wildlife Service. VINS Technical Report 05-1. Vermont Institute of Natural Science, Woodstock, Vermont. 15 pp.

Link W. A., and J. R. Sauer. 2002. A hierarchical analysis of population change with application to Cerulean Warblers. Ecology 83:2832–2840.

MacKenzie, D. I., J. D. Nichols, J. A. Royle, K. H. Pollock, L. L. Bailey, and J. E. Hines. 2006. Occupancy Estimation and Modeling: Inferring Patterns and Dynamics of Species Occurrence. Elsevier, Amsterdam.

MacKenzie, D. I., and A. Royle. 2005. Designing occupancy studies: general advice and allocating survey effort. Journal of Applied Ecology 42:1105–1114.

Nixon E. 1999. COSEWIC status report on the Bicknell's thrush *Catharus bicknelli* in Canada, *in* COSEWIC assessment and status report on the Bicknell's thrush *Catharus bicknelli* in Canada. Committee on the Status of Endangered Wildlife in Canada. Ottawa. 1–43 pp.

Nixon, E. A., S. B. Holmes & A. W. Diamond. 2001. Bicknell's Thrushes (*Catharus bicknelli*) in New Brunswick clear cuts: their habitat associations and co-occurrence with Swainson's Thrushes (Catharus ustulatus). Wilson Bulletin 113:33–40.

Ouellet, H. 1993. Bicknell's Thrush: taxonomic status and distribution. Wilson Bulletin 105:545–572.

Rich, T. D., C. J. Beardmore, H. Berlanga, P. J. Blancher, M.S. W. Bradstreet, G. S. Butcher, D. W. Demarest, E. H. Dunn, W. C. Hunter, E. E. Inigo-Elias, J. A. Kennedy, A. M. Martell, A. O. Panjabi, D. N. Pashley, K. V. Rosenberg, C. M. Rustay, J. S. Wendt, T. C. Will. 2004. Partners in Flight North American Landbird Conservation Plan. Cornell Lab of Ornithology, Ithaca, New York. 84 pp.

Rimmer, C. C., J. L. Atwood, K. P. McFarland, and L. R. Nagy. 1996. Population density, vocal behavior, and recommended survey methods for Bicknell's Thrush. Wilson Bulletin 108(4):639–649.

Rimmer, C. C., K. P. McFarland, W. G. Ellison, and J. E. Goetz. 2001. Bicknell's Thrush (*Catharus bicknelli*). No. 592, *In* A. Poole and F. Gill (Eds.). The Birds of North America. Academy of Natural Sciences, Philadelphia, Pennsylvania, and American Ornithologists' Union, Washington, D.C. 28 pp.

Rimmer, C. C., K. P. McFarland, D. C. Evers, E. K. Miller, Y. Aubry, D. Busby, and R. J. Taylor. 2005. Mercury levels in Bicknell's Thrush and other insectivorous passerines in montane forests of northeastern North America. Ecotoxicology 14:223–240.

Rodenhouse, N.L., S.N. Matthews, K.P. McFarland, J.D. Lambert, L.R. Iverson, A. Prasad, T.S. Sillett, and R.T. Holmes. 2008. Potential effects of climate change on birds of the Northeast. Mitigation and Adaptation Strategies for Global Change 13:517-540.

Rosenstock, S. S., D. R. Anderson, K. M. Giesen, T. Leukering, and M. F. Carter. 2002. Landbird counting techniques: current practices and an alternative. Auk 119:46–53.

Royle, J. A., and J. D. Nichols. 2003. Estimating abundance from repeated presence-absence data or point counts. Ecology 84:777–790.

Simons, T. R., M. W. Alldredge, K. H. Pollock, and J. M. Wettroth. 2007. Experimental analysis of the auditory detection process on avian point counts. Auk 124(3):986–999.

Stattersfield, A. J., M. J. Crosby, A. D. Long, and D. C. Wege. 1998. Endemic bird areas of the world: priorities for biodiversity conservation. BirdLife International, BirdLife Conservation Serial no. 7.

Stevens, D. L., and A. R. Olsen. 2004. Spatially balanced sampling of natural resources. Journal of the American Statistical Association 99:262–278.

U.S. Geological Survey Patuxent Wildlife Research Center. 2006. North American Breeding Bird Survey current data 1966–2005. Available: http://www.pwrc.usgs.gov/bbs/retrieval [2006, February 1].

U.S. North American Bird Conservation Initiative Monitoring Subcommittee. 2007. Opportunities for Improving Avian Monitoring. U.S. North American Bird Conservation Initiative Report. 50 pp. Available from the Division of Migratory Bird Management, U.S. Fish and Wildlife Service, Arlington, Virginia; on-line at http://www.nabci-us.org/.

SECTION 2: STANDARD OPERATING PROCEDURES

Mountain Birdwatch Monitoring Protocol

SOP #1: Field Season Logistics

Version 2.0
December 2008

This Standard Operating Procedure provides regional program managers and observers with a list of preparations to make prior to the field season.

I. Program Manager

The most important preparation is to ensure that skilled observers are available and trained to conduct the field surveys. Each winter, regional program managers should contact the previous year's participants to determine whether additional observers will need to be recruited or hired (see SOP #2, Recruiting and Training Observers). If seasonal technicians are needed to ensure complete route coverage or to collect habitat data, regional program managers should post a job announcement in appropriate employment bulletins (e.g., Ornithological Opportunities) and circulate a copy of the notice to Mountain Birdwatch volunteers.

By mid-April each year, the program manager will prepare a mailing to all observers that will include the following items:

- A cover letter thanking them for participating in the monitoring program, reminding them of the monitoring window dates and starting times, and encouraging them to review the protocol prior to the field season.
- Datasheets (see Appendix B) for the upcoming field season;
- A map of the observer's adopted route(s) and a detailed description of the survey stations containing GPS coordinates and photos;
- A manual and training CD for new observers.

Training sessions will be organized to introduce or review the protocol, as needed. The program manager will give a talk about high-elevation songbird ecology and conservation, followed by a bird walk with simulated field surveys. Emphasis will be placed on bird identification, distance estimation, procedures for recording data in the field, and post-survey data handling. Training sessions will be advertised on the Mountain Birdwatch listserv and directly to new observers via email or phone. Training sessions will take place in late May so that observers will recall the information during the June survey.

II. Observers

It is critical that observers familiarize themselves with the protocol and the area in which they are surveying. It is particularly important that they review the field marks and vocalizations of target species (SOP #2), since misidentification is perhaps the most serious error observers can make during a bird count. Errors in estimating distances or double-counting individual birds, though

also problematic, are less serious. In order to help observers prepare for the survey, the manual will contain the following list of actions to take prior to going in the field to survey.

Home Preparations for Volunteer Observers

1. Register for Mountain Birdwatch to receive a training packet and route assignment.
2. Subscribe to the Mountain Birdwatch listserv at http://groups.yahoo.com/group/MountainBirdwatch.
3. Set aside two or three survey dates between June 1 and 21 in the United States and June 4 to 25 in Canada. The second or third dates will serve as backups in the event of poor weather.
4. Brush up on bird identification skills with the Mountain Birdwatch training CD, other bird recordings, an illustrated field guide, online resources, and the "Identification Guide to the Northeast's High-elevation Forest Songbirds" (SOP #2).
5. Attend a training session and/or watch the online training video.
6. Become familiar with the datasheets and route maps.
7. Review the survey protocols.
8. Learn how to use a map and compass by consulting the tutorial included in the manual.
9. If surveying a route for the first time, scout it in advance.
10. If planning an overnight in the backcountry, learn about the local camping regulations. Please consult the program manager if permissibility of camping is unclear.
11. Pack judiciously for the field, referring to the equipment list included in the manual. Bring emergency supplies such as a sleeping bag, first aid kit, matches, a flashlight, and extra food and water.
12. Check the weather forecast before the survey. If high winds and/or moderate to heavy precipitation are forecasted, schedule the survey for another day. To ensure calm conditions, conduct the survey during a stable pattern of fair weather. For detailed forecasts, visit:
    www.mountwashington.org/weather/ (White Mountains);
    www.fairbanksmuseum.com/eye_recreational.cfm (Green Mountains);
    www.adirondacks.com/weather.html (Adirondacks);
    www.theweathernetwork.com (Canada); or
    www.wunderground.com/ (anywhere).
13. If at any time it becomes unsafe to proceed with the route, do not continue. Safety is the highest priority. Please advise the program manager of any difficulties encountered accessing the route. Hiking with a companion is also recommended to facilitate a safe return in the event of injury.

Mountain Birdwatch Monitoring Protocol

SOP #2: Recruiting and Training Observers

Version 2.0
December 2008

This Standard Operating Procedure provides recommendations for program managers to aid in recruiting and retaining volunteer observers. It also provides instruction on training observers in proper identification of the focal species, survey techniques, and navigation to the field survey locations.

I. Recruiting Volunteer Observers

Volunteer observers will be recruited from a variety of local sources, including bird clubs, Audubon chapters, birding listservs, and hiking clubs. Recruitment methods will include public talks, website and newsletter announcements, and direct contact by phone or email. The desired qualities of a Mountain Birdwatch observer are birding ability, proficiency in backcountry travel, and ability to make a multi-year commitment. The first two criteria are most important as the protocol is strenuous and volunteer changeover is unavoidable. Unlike many other avian citizen science programs that target avid birdwatchers for recruitment, Mountain Birdwatch also relies on experienced hikers with a strong interest in birds.

II. Volunteer Retention

Because Mountain Birdwatch relies on volunteers and covers a large geographic area, volunteer retention is key to minimizing recruitment and training costs. Retaining volunteers from year-to-year ensures that observers are skilled with the protocol, resulting in more accurate data collection and simpler statistical analyses.

From eight years of working with Mountain Birdwatch volunteers in the northeastern U.S., the Vermont Center for Ecostudies has learned that volunteers remain committed when they know they are contributing to something of value. Mountain Birdwatch volunteers are dedicated to bird conservation and preserving the integrity of high-elevation ecosystems. Thus, we aim to provide summaries of results and examples of how the data are used for conservation. These will be provided on the program website, during public presentations, and on the program listserv. The Mountain Birdwatch listserv also serves as a casual forum for discussing the ecology and conservation of high-elevation ecosystems, clarifying protocol details, and sharing the rewards of hiking, camping, and birding in the mountains.

Past experience has shown that, in many instances, volunteers adopt a site for several years and look forward to the survey as both an opportunity to promote conservation and a fun outdoor adventure. It is important for program managers to cultivate this aspect of the program and establish a personal relationship with volunteers through direct contact and participation on the listserv.

III. Visual and Auditory Identification of Birds

The most essential component for the collection of credible bird data is well-trained observers. Even experienced observers commit significant errors in identification and abundance estimation when conducting auditory point counts (Simons et al. 2007). Various studies have shown that observer bias is one of the most noteworthy bias factors in trend analysis of songbird populations (Kepler and Scott 1981, Baker and Sauer 1995). Measures that reduce the significance of observer error and bias include observer training and use of a restricted list of target species.

This protocol focuses on high-elevation songbirds with vocalizations that can be readily identified in the field. All volunteer and paid observers will be supplied a training CD with the songs and calls of the target species, songs and calls of birds that could be confused with them, and a narrative providing tips on identification. "An Identification Guide to High-elevation Forest Songbirds", to be included in the manual, will highlight the most commonly encountered birds with descriptions of field marks and vocalizations. In addition, observers will be referred to birding resources on the Internet, such as the All About Birds bird guide (http://www.birds.cornell.edu/AllAboutBirds/) hosted by the Cornell Lab of Ornithology, and Cornell's Macaulay Library Animal Sound & Video Catalog (http://www.animalbehaviorarchive.org/loginPublic.do).

Illustrated field guides and audio recordings should also be used to brush up on identification skills prior to the field season and to resolve questions that arise in the field. Some suggested resources include the following:

- Tapes or CDs of bird songs for species found in eastern North America such as the Stokes or Peterson series.
- National Audubon Society Interactive CD-ROM Guide to North American Birds. This interactive CD-ROM is an excellent resource for learning calls, site identification, and background information on bird species.
- National Geographic. 2006. Field Guide to the Birds of North America, 5th Edition. National Geographic, Washington, D.C.
- National Audubon Society. 2003. The Sibley Field Guide to Birds of Eastern North America. Alfred A. Knopf, New York.

An online certification program may be used in the future to screen and/or rate observers based on bird identification skill. Existing models include the Bird Identification Quiz used by the Vermont Center for Ecostudies Forest Bird Monitoring Program (www.vtecostudies.org/FBMP/birdquiz.html) and the Western Great Lakes Region Birder Certification Program (www.uwgb.edu/birds/certification/index.htm).

IV. Protocol and Field Training

All observers

Mountain Birdwatch observers must be comfortable finding their way to the survey locations with map and compass. Participants will be encouraged to practice using navigation equipment and to locate survey stations prior to the official count. This will also save time in the field when

conducting the survey. The observer manual includes the USGS Fact Sheet 035-01, titled "Finding Your Way with Map and Compass" (USGS 2001). In addition, observers will be supplied with detailed written descriptions, photos, a topographic map, and GPS coordinates of each survey location.

Training sessions will be organized across the region to provide training for new participants and a refresher for returning observers. The program manager will give a talk about high-elevation songbird ecology and conservation, followed by a bird walk with simulated field surveys. Emphasis will be placed on bird identification, distance estimation, procedures for recording data in the field, and post-survey data handling. Training sessions will be advertised on the Mountain Birdwatch listserv and directly to new observers via email or phone.

All observers should be comfortable placing Bicknell's Thrush detections within one of the four distance categories (0-25 m, 25-50 m, 50-100 m, and beyond 100 m) and all other species within or beyond 50 m. Observers should familiarize themselves with these distances prior to conducting the survey. To do this, they should set a mock survey point in a forest setting and place markers at 25-m, 50-m, and 100-m intervals in opposite directions. A measuring tape, measured length of rope, or laser range finder work well for making field measurements. Once observers have a feel for these distances, they should practice estimating the distance to vocalizing birds and then check for accuracy by measuring the actual distance.

Paid technicians

The program manager will supply paid technicians with all the necessary equipment and materials to carry out the bird surveys and habitat measurements, as well as a copy of this protocol and other training materials. In late May, the program manager will host an overnight training session in high-elevation habitat, with dusk and dawn field exercises. Instructions will be provided for the use of each piece of equipment. Protocols for the bird survey and habitat measurements will be reviewed and then practiced in a simulated survey. This will provide an opportunity to improve skills and standardize methodology. In years when habitat data are to be collected, additional training will be focused on collecting vegetation measurements in a systematic manner, and will be further described in SOP #5 in the next version of this plan. The regional program managers will check in with the technicians within the first week of field surveys to ensure that the protocol is being conducted correctly.

References:

Baker, R. J. and J. R. Sauer. 1995. Statistical aspects of point count sampling. Pages 125–130 in C. J. Ralph, J. R. Sauer and S. Droege, eds. Monitoring bird populations by point counts, USDA Forest Service, Pacific Southwest Research Station, General Technical Report PSW–GTR–149.

Kepler, C. B. and J. M. Scott. 1981. Reducing bird count variability by training observers. Studies in Avian Biology 6:366–371.

Simons, T. R., M. W. Alldredge, K. H. Pollock, and J. M. Wettroth. 2007. Experimental analysis of the auditory detection process on avian point counts. Auk 124(3):986–999.

USGS. 2001. Finding your way with map and compass. USGS Fact Sheet 035-01 [Online]. U.S. Department of the Interior, U.S. Geological Survey. Available: http://erg.usgs.gov/isb/pubs/factsheets/fs03501.html [2008, April 10].

Mountain Birdwatch Monitoring Protocol

SOP #3: Delineating the Sample Frame and Establishing Survey Points

Version 2.0
December 2008

This Standard Operating Procedure describes the sample frame and sampling procedure for a standardized high-elevation songbird monitoring protocol that encompasses the breeding range of Bicknell's Thrush.

I. Delineating an International Sample Frame

The Mountain Birdwatch sample frame will consist of hundreds of disjunct land units that could contain Bicknell's Thrush habitat in the northeastern United States, Quebec, and the Canadian Maritimes. These areas generally occur at lower elevations with increasing latitude (Lambert et al. 2005), most likely due to effects of growing-season temperature on the extent of balsam fir and red spruce (Cogbill and White 2001). The moderate, maritime climate may also influence the distribution of Bicknell's Thrush, which occurs at lower elevations in southwestern Quebec than at comparable latitudes in Atlantic Canada (VCE, unpubl. data). An ongoing modeling exercise will use elevation, latitude, longitude, and climatic data to delineate the boundaries of habitable land units based on GIS analysis of all available, geo-referenced Bicknell's Thrush observations made on the breeding grounds since 2001. Forest composition and structure will not be a considered in the delineation of the sample frame, as forests are dynamic in the survey area and are expected to change over time. Nonetheless, balsam fir and red spruce are expected to dominate the sample frame in varying proportions, with hardwoods gaining prominence at lower elevations and in some recently disturbed areas.

The ideal sampling strategy would not be constrained by forest structure or topography, however navigating off-trail in densely forested and mountainous terrain is strenuous, time-consuming, and potentially hazardous. These concerns are magnified by the participation of volunteers in data collection. To ensure safe and expeditious field work, survey stations will be placed on trails and along logging roads in areas delineated by the U.S.-Canada model of potential Bicknell's Thrush habitat. This will have consequences for how Mountain Birdwatch data are interpreted and extended for modeling purposes. The area of statistical inference will be limited to forests adjacent to trails and logging roads. However, inferred patterns may be extended to all high-elevation land units in the sample frame, provided that underlying assumptions are made clear. The assumption that trails do not affect the abundance or detectability of Mountain Birdwatch target species has already been supported by methodological research conducted in the White Mountain National Forest (DeLuca and King, unpubl. data).

II. Selecting Sample Units

A Generalized Random Tessellation Stratified (GRTS) design will be used to select sample units from the international sample frame. GRTS will allow us to achieve spatial balance throughout the region, add routes as habitats shift, and maintain a representative sample even if trails are

closed or relocated. It also allows for intensified sampling to address priority management issues in certain areas (e.g., climate change in the Catskills or timber management in New Brunswick).

For the GRTS selection process we will lay a grid across the breeding range of Bicknell's Thrush. Grid cell dimensions will be determined by computing power, but will be no less than 1 km and no more than 2 km on a side. GRTS will generate an ordered list of grid cells from the sample frame. Each grid cell will then be evaluated as to the presence of trails or roads.

Grid cells that contain trails or roads and overlap with the sample frame's high-elevation land units will qualify for inclusion in the sample. If a cell is selected, a survey station will be established at the midpoint of the longest intersecting trail or road segment. Additional survey locations will be generated in both directions along the trail at intervals of 250 horizontal meters. Up to six survey locations will be plotted, depending on the extent of the high-elevation land unit. In the event that the unit is large enough for just one survey location, two additional points will be plotted and monitored annually to balance sampling intensity within an area. These will be used selectively, if at all, in analyses. If historically monitored survey stations exist on a selected trail or road segment, then an effort may be made to align new points with previously surveyed locations, provided that the distance between points is at least 200 horizontal meters. Such decisions will be made jointly by the regional program managers, on a case-by-case basis.

Direction of travel along the route will be established randomly. If there is a split in the trail and both trails continue in a direction further than 250 m from the other points, then a random process will determine which fork to follow. If one fork bends back toward the initial points, it will be discarded as an option. Alignment with historic Mountain Birdwatch and HELP routes will be possible if the GRTS technique identifies cells that contain an historic route.

Sites deemed unsuitable for surveying will be excluded, according to GRTS protocol, in the order in which they were selected. Sites will be automatically excluded if they are deemed unsafe or if they occur on private land where permission to access is not attainable. Units will continue to be selected until the desired sample size is reached. Should sites become unsuitable in the future and need to be discontinued, such as through permanent conversion, suitable replacements will be selected according to the GRTS-generated list. Likewise, the GRTS list will serve as the basis for selecting sites within subregional focus areas for intensified monitoring effort.

Sites that have been recently harvested or have matured beyond a seral stage suitable for Bicknell's Thrush will not qualify for exclusion, barring any changes in site selection procedures made during the winter of 2009. Refer to page 12 for a discussion of tradeoffs associated with monitoring harvested areas and for a list of optional approaches.

III. Sample Size

Assuming that pilot data are representative of actual results, it will take 400-700 points on an unknown number of routes to achieve all of the targets for statistical power and precision (see "Sample Size Requirements" beginning on page 12). The ultimate sample size, which is expected to exceed this range, will depend on the collective capacity of the lead organizations and agencies. This matter will be closely reviewed during the winter of 2009.

IV. Establishing Survey Points in the Field

Once the survey stations are located in a GIS project, paid field technicians will establish the points in the field. Technicians will use GPS units to navigate to the designated waypoints and ensure separation of points by 250 horizontal meters, regardless of elevation and trail distance. Coordinates for each point will be verified, a detailed written description of each point will be recorded using enduring features (e.g., large trees or rocks, vistas, trail features), and photos will be taken in each cardinal direction to aid in relocating points in the future. Points will be marked in the field with reflective tacks pinned to trail- or roadside trees, subject to landowner approval.

References:

Cogbill, C. V. and P. S. White. 1991. The latitude-elevation relationship for spruce-fir forest and treeline along the Appalachian mountain chain. Vegetation 94:153–175.

Lambert, J. D., K. P. McFarland, C. C. Rimmer, S. D. Faccio, and J. L. Atwood. 2005. A practical model of Bicknell's Thrush distribution in the northeastern United States. Wilson Bulletin 117:1–11.

Mountain Birdwatch Monitoring Protocol

SOP #4: Conducting the Bird Survey

Version 2.0
December 2008

This Standard Operating Procedure describes the survey protocol to be followed by the observer in the field. It should be reviewed carefully before conducting the survey.

I. Overview of Count Protocol

The Mountain Birdwatch protocol consists of four consecutive 5-min counts at each survey station, for a total sampling period of 20 min per point. Observers will conduct repeated simple counts for all target species during each 5-min period. During the first 10 minutes of the survey, observers will track individual Bicknell's Thrushes within four distance categories on a minute-by-minute basis. Up to six points will be surveyed along a trail or road on a single visit in June.

II. Populations Being Monitored

Ten bird species that occur in high-elevation habitats were selected for this program based on level of conservation concern, degree of habitat specialization and range restriction, and ease of identification. The Mountain Birdwatch target species are: Yellow-bellied Flycatcher, Black-capped Chickadee, Boreal Chickadee, Winter Wren, Bicknell's Thrush, Swainson's Thrush, Hermit Thrush, Blackpoll Warbler, Fox Sparrow, and White-throated Sparrow. In addition, we will monitor the abundance of Red Squirrels because these nest predators can limit productivity of Bicknell's Thrush and other open-cup nesters that breed in high-elevation forests.

III. Sampling Frequency and Replication

Routes will be surveyed in the early morning hours on one visit in June when breeding songbirds are most vocal. An attempt will be made to survey all routes annually with the realization that inclement weather, problems with route access, and other circumstances can prevent complete coverage in a given year. Each of the survey locations will be surveyed for 20 minutes with new counts started at five-minute intervals. Each five-minute interval can be considered a temporal replicate, for a total of four sampling occasions at each location. Individual Bicknell's Thrush detections will be recorded on a minute-by-minute basis during the first ten minutes of the count, for a total of ten sampling occasions.

IV. Steps for Conducting the Count

<u>Timing of the Survey</u>

Surveys should be timed to coincide with the height of breeding and vocal activity in birds. This is between June 1 and June 21 in the U.S. and between June 4 and June 25 in Canada.

In order to increase the likelihood of detecting Bicknell's Thrush, which is most vocal during the pre-dawn period, observers should begin the survey 45 min before sunrise. This will also ensure that the survey is finished by 8:00 am when vocal activity is waning. Observers should determine local sunrise using a published resource, such as the U.S. Naval Observatory (http://aa.usno.navy.mil/data/docs/RS_OneYear.php) or The Weather Network (http://www.theweathernetwork.com/).

Survey Conditions

Inclement weather can greatly reduce an observer's ability to detect birds in the field (Simons et al. 2007). Each survey should be conducted in temperatures above 35ºF and when precipitation and wind conditions permit. Occasional drizzle or a brief shower is acceptable, but steady drizzle or prolonged rain is not. A light wind with occasional gusts is acceptable, but a steady breeze that causes small trees to sway (>20 mph) is not. If cold temperatures, rain, and/or high winds are encountered, delay the survey until 30 minutes after the conditions have improved. If poor conditions persist, the survey should be rescheduled for another morning.

Pre-survey Set-up

Once positioned at the first survey location, the observer will pace out 25 m in one direction along the trail and place a marker. The marker will be used to help judge the distance to birds detected during the survey. The observer will return to the survey point and wait for about 30 seconds to catch his/her breath and allow time for the birds to settle back into the area. Location and weather conditions can be noted at this time. When ready, the observer will start a digital stopwatch or suitable time-keeping device.

Repeated simple counts

At each survey location, conduct four consecutive 5-min counts over a total sampling period of 20 minutes. Within each 5-min interval, record all individuals in the target species group. To reduce the risk of counting the same individual twice, use the datasheet (Appendix B) to map each individual and its observed or presumed movements. Mark each individual bird/squirrel on the circle in its approximate location within or outside of the 50-m radius circle. Note whether each bird/squirrel was heard or visually identified by writing an "h" or "v" next to the species code. If the bird/squirrel moves to another location within the 5-minute period, draw a line to the new location and note whether it was heard ("h") or visually ("v") identified at the new location. See Appendix C for an example.

Bicknell's Thrush Protocol

Collect additional information on Bicknell's Thrush (BITH) during the first 10 min of the 20-min sampling period. Use the circular plots for the first and second count periods on the datasheet (Appendix B) to map each BITH by writing "BITH" in the approximate location of **each** individual. Pay special attention to the four distance categories (0-25 m, 25-50 m, 50-100 m, and beyond 100 m) marked on the sheet. The circles are meant to help you keep track of each

individual bird's movements and to estimate density and abundance, so please use your best judgment to place the bird in the appropriate distance band.

Below each "BITH" notation, record the minute in which it was detected and the form of detection. Record the minute of detection as the number of minutes that have elapsed since you started the count (the minute shown on your stop watch, from 0-9), followed by an "h" if the bird was heard, a "v" if it was visually detected, or "hv" if it was heard and seen. Separate multiple detections of an individual by commas such that a possible record might read (1h, 3h, 4hv), indicating that the thrush was heard in the first and third minutes and heard and seen in the fourth minute. A detailed example is provided in Appendix C. After the first 10 minutes of the survey, continue to record Bicknell's Thrush according to the repeated simple count protocol for the other target species.

Bicknell's Thrush detections made outside of a count period (e.g., the evening before, the morning prior, between survey points, or after the survey) should be entered directly into eBird (www.ebird.org). This is optional.

V. After the Count

After each count is completed, the cone index count protocol described in SOP #5 should be conducted at each point. At the earliest available opportunity upon arriving home, all Bicknell's Thrush data should be transcribed into the appropriate tables on the datasheet. Volunteer observers should review all datasheets for errors before making a photocopy and submitting to the regional program manager.

Mountain Birdwatch Monitoring Protocol

SOP #5: Documenting Habitat and Climate Variables

Version 2.0
December 2008

Understanding spatial patterns and temporal changes in high-elevation songbird abundance and occupancy requires information about environmental covariates. This is a fragile environment and a number of factors threaten the integrity of high-elevation ecosystems. Many of these relate to changing climatic conditions, changes in habitat structure and composition, increased exposure to atmospheric pollution, industrial development, and changes in ecological patterns. This Standard Operating Procedure outlines the habitat and climate variables that can be collected in conjunction with this monitoring program and used in covariate analyses to determine the strength of their influence on the ecology of high-elevation birds.

I. Protocol for Estimating Cone Mast

After completing each bird count, observers will collect an index of cone mast at each station. This information will be used in conjunction with red squirrel and avian abundance data to assess the relationship between pulses in cone mast and population dynamics of high-elevation birds and their principal nest predator. The procedure, based on LaMontagne et al. (2005), involves three steps.

1. At each survey station, find the nearest balsam fir tree in each cardinal direction with branches that are visible for 3 m down from the top. If no tree fits this description, move along the trail for up to 50 m and stop upon locating suitable trees. If no suitable tree is found, note this on the datasheet with an 'X' to distinguish from a count of zero cones. The fir should be at least 4 m tall to ensure that it is of flowering age, unless it is near treeline or in stunted conditions, in which case the closest tree that is at least 2/3 of the canopy height should be chosen. IMPORTANT: Do not select the closest tree with cones. Select the closest tree that is of flowering age (as described above).
2. Count the number of fresh cones in the top 3 m of the tree using binoculars. Do not move from your vantage point while counting cones (only cones visible from your position will be counted). Record the number of cones on the datasheet in the appropriate cells (Appendix B).
3. Repeat steps 1 and 2 for red spruce in the U.S. and black and white spruce in Canada. To qualify for the count, red spruce trees should be canopy height or higher, while black and white spruce trees should be at least 2/3 of the canopy height. If you are near treeline, pick a tree that is at least 2/3 canopy height. If no tree fits this description, move along the trail for up to 50 m and stop upon locating a suitable tree. If no suitable tree is found, note this on the datasheet with an 'X' to distinguish from a count of zero cones.

Identification of Tree Species

Balsam fir (*Abies balsamea*):

Balsam fir is the dominant species in the high-elevation spruce-fir forest. It can be easily identified by the medium-sized cones pointing up from the branches. In June, the cones will be small and green (Figure 1). Be careful to differentiate between the fresh growth on the end of the branches and the new cones (this should be easy using binoculars).

Figure 1. Young Balsam fir cones are light green in June.

Balsam fir bark is smooth with resin blisters. The needles are typically flat and positioned on the branches in a flat plane, though variation in this trait may occur in subalpine environments.

Red spruce (*Picea rubens*):

Red spruce trees are less common and have small cones hanging down from the branches. Spruce trees hold onto their old cones and appear brown (Figure 2). New cones will be green and the scales will be closed (Figure 3). Red spruce bark is scaly. The needles are round and occur all around the branches.

Figure 2. Red spruce trees have a "prickly" appearance and last year's small red cones are often visible.

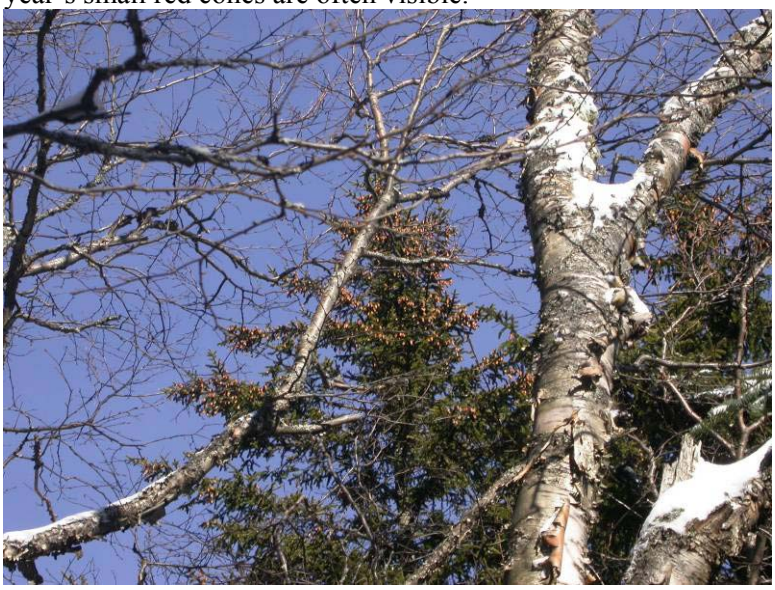

Figure 3. Close-up of young spruce cones.

II. Collection of Habitat Metrics in the Field

If resources permit, paid technicians will gather standardized habitat measurements before the end of the 2013 field season, using protocols derived from previous investigations of high-elevation songbird habitat (Aubry unpublished data, Campbell and Whittam 2006, Connolly et al. 2002, Frey 2008, Hale 2006, Nixon et al. 2001, Noon 1981, Pierce-Berrin 2001, Sabo 1980). Our aim is to repeat habitat sampling at 10-year intervals thereafter. A digital camera will be used to document survey locations to aid in route navigation and for future assessments of forest change. In addition to the standard habitat measurements, leaf litter and soil samples will be collected for future analyses of calcium availability and mercury exposure.

Two habitat sampling protocols were tested at a single site in the summer of 2008. Although final decisions related to habitat sampling have been deferred, the pilot procedures described below could form the basis of a standardized Mountain Birdwatch habitat protocol.

<u>Quick Version (40-60 min for team of two)</u>

1) Take a bearing of 90° (east) and measure 25 m away from the edge of the trail or road. If the terrain precludes movement to the east, then go to the south, west, and then north until a suitable location is found. Mark your location with a tent stake or stick.
2) Record the latitude and longitude (in decimal degrees) using a GPS unit and record the accuracy in meters. It is preferable to have 3D satellite reception and better than 10 m accuracy, if possible.
3) Imagine a 10 m radius around the central location. This defines the extent of the subplot, over which the remaining steps should be measured/estimated. Measure the *average* slope and aspect of the subplot area. For example, if there is a steep gully running through the plot that does not represent the slope of the entire plot, use your best judgment to select a different angle to measure the average slope. Measure slope as a percent by standing in the center of the plot and looking through a clinometer to a point approximately 10 m away at eye level. Facing in the same direction, use a compass to record the bearing (in degrees) of the aspect.
4) Average canopy and shrub height are measured with a laser rangefinder. Canopy is defined as the tallest consistent layer of trees in a forest stand, and not necessarily the emergent trees. The shrub layer is defined as any woody vegetation between 1 and 3 m in height and with a dbh of (≤ 5 cm).
5) Visually estimate canopy cover and shrub cover (as a percent) using the scaled categories provided.
6) Visually estimate the percent composition of each tree species in both the canopy and subcanopy. Subcanopy is defined as the second tallest layer of trees in the stand and usually is the mid-story above the shrub layer in high-elevation spruce-fir forests. Estimates should add to 100%. For example, if there is one paper birch with a large crown that covers one-third of the canopy area above the subplot, and the rest of the canopy was composed of balsam fir, record 66.6% for balsam fir and 33.3% for paper birch, even though there are much fewer birch trees contributing to the canopy cover.

7) Using a 10-factor wedge prism, record the number of trees within the limit defined by the prism (this distance is greater than 10m and is unlimited). Hold the prism with the flat edge at the bottom. Put the prism (not your eye) at the sampling point and rotate in a circular direction. Looking at “breast height” on the trees around you, count trees as "in" if the offset portion of the trunk connects with the main stem of the tree. If it’s borderline, count as 0.5. Record for each species of live tree and for all dead. Dead trees must be at least of breast height to differentiate from stumps.
8) Repeat steps 1-7 at two more subplots .

<u>Long Version (60-80 min for team of two)</u>

1) Take a bearing of 90° (east) and measure 25 m away from the edge of the trail or road. If the terrain precludes movement to the east, then go to the south, west, and then north until a suitable location is found. Mark your location with a tent stake and lay two straight sticks perpendicular to one another in north-south and east-west directions, crossing at the stake, to define four quadrants.
2) Record the latitude and longitude using a GPS unit and record the accuracy in meters. It is preferable to have 3D satellite reception and better than 10 m accuracy, if possible.
3) Imagine a 10 m radius around the central location. This defines the extent of the subplot, over which the remaining steps should be measured/estimated. Measure the *average* slope and aspect of the subplot area. For example, if there is a steep gully running through the plot that does not represent the slope of the entire plot, use your best judgment to select a different angle to measure the average slope. Measure slope as a percent by standing in the center of the plot and looking through a clinometer to a point approximately 10 m away at eye level. Facing in the same direction, use a compass to record the bearing (in degrees) of the aspect.
4) Average canopy height can be visually estimated if below 5 m, otherwise a clinometer should be used to determine the height of a representative tree. Record declination (to base of tree), inclination (to top of tree), slope (to breast height), and distance from your location to the base of the tree. Canopy is defined as the tallest consistent layer of trees in a forest stand, and not necessarily the emergent trees.
5) Use a spherical densiometer to measure canopy cover (percent cover). Face a cardinal direction and hold the densiometer at approximately forearm length such that your reflection is just out of sight. Count the number of quarter-squares covered by the canopy. Repeat in each of the remaining cardinal directions. There are 96 quarter-squares on the densiometer and it is often easier to subtract gaps in the canopy from 96.
6) Visually estimate the percent composition of each tree species in both the canopy and subcanopy. Subcanopy is defined as the second tallest layer of trees in the stand and usually is the mid-story above the shrub layer in high-elevation spruce-fir forests. Estimates should add to 100%. For example, if there is one paper birch with a large crown that covers one-third of the canopy area above the subplot, and the rest of the canopy was composed of balsam fir, record 66.6% for balsam fir and 33.3% for paper birch, even though there are much fewer birch trees contributing to the canopy cover.
7) Using a 10-factor wedge prism, record the number of trees within the limit defined by the prism (this distance is greater than 10m and is unlimited). Hold the prism with the flat edge at

the bottom. Put the prism (not your eye) at the sampling point and rotate in a circular direction. Looking at “breast height” on the trees around you, count trees as "in" if the offset portion of the trunk connects with the main stem of the tree. If it’s borderline, count as 0.5. Record for each species of live tree and for all dead. Dead trees must be at least of breast height to differentiate from stumps.

8) The point-quarter method is used to measure shrub density. In each quadrant (defined by the crossed sticks, such that Q1 is the NE, Q2 is SE, Q3 is SW, and Q4 is NW), measure the distance to the nearest deciduous and coniferous shrub in meters. A shrub is defined as being ≤ 5 cm dbh and between 1 and 3 m tall. It helps to attach the measuring tape to the tent stake if working alone. If no shrubs occur within 10 m, mark the datasheet with “na”.
9) Visually estimate the percent ground cover for each ground cover class (ferns/herbs/grass, moss, leaf litter/soil, woody debris, rock/lichen) within a 10 m radius. Estimates should add to 100%.
10) Remove the stake and crossed sticks. Remove the stake or stick. Remove a fistful of leaf litter and place it in a quart-size Ziploc bag (the bag should be about half full). Use a permanent marker to label the bag with the date, route name, station number, subplot number, and the overhead tree species. Double-bag the sample and store it in a cooler with ice and transfer to a freezer at the earliest opportunity.
11) Repeat steps 1-11 at three more subplots .

Equipment Needed

The complete list of necessary equipment is still to be determined, but will likely include:

Dbh tape that doubles as a metric measuring tape
10-factor wedge prism
Clinometer or laser range finder
Spherical densiometer
GPS unit
Compass
Flagging
Tent stake
Digital Camera
Spare batteries
Permanent marker
Firetacks
Datasheets
Pencils

Training Materials

In addition to training received in person from the program manager, there are online tools available that provide training in the use of forestry equipment. These tools are recommended as an additional resource for technicians:

- Instructions for using forestry equipment: www.cfr.washington.edu/Classes.esc.221/ Classes.Esc.221.BAK/skills/ VegTerrain%20Field%20Procedures.doc.htm
- Practice using a wedge prism: www.uvm.edu/envnr/forestry/plot/

III. Topographic, Climatic, and Biogeochemical Variables of Interest

Geo-referenced information is available for a variety of physical and chemical characteristics that may influence the distribution and/or abundance of bird populations. A partial list appears in Table 1. A complete catalogue of relevant GIS data is scheduled to be completed in 2009.

Table 1. Topographic, climatic, and biogeochemical data available in GIS layers, with information on frequency of collection.

Habitat and Climate Metric	Frequency of Collection (yrs)
Latitude/longitude	Once
Elevation	Once
Slope	Once
Aspect	Once
Topographical index	Once
Mean daily temperature of forest growing season	Annual
Mean night-time temperature of bird nesting season	Annual
Mean precipitation of bird nesting season	Annual
El Niño Southern Oscillation Index	Annual
Forest type	??
Canopy height	??
Wind power potential	Once
Foliar calcium (White Mountains and Catskills only)	Once
Exposure to atmospherically deposited mercury (U.S.)	Once

IV. Measuring Extent of Bicknell's Thrush Wintering Habitat

Bicknell's Thrush population size and trend measured on the breeding grounds may be influenced by extent of habitat on the wintering grounds. The Nature Conservancy's Caribbean division has a geospatial analysis lab with land-cover and land-use information for Hispaniola, where the majority of the population winters. These coverages will be used to estimate the area of moist broadleaf forest on the island at five-year intervals, subject to availability of remotely sensed data. An implementation plan for restoring wintering habitat is being developed by the Wintering Subgroup of the International Bicknell's Thrush Conservation Group.

References:

Campbell, G. and B. Whittam. 2006. Bicknell's Thrush habitat in Nova Scotia's Industrial Forest: final report to the Nova Forest Alliance and Stora Enso Port Hawkesbury, Ltd. Unpubl. Report. Bird Studies Canada. 21 pp.

Connolly, V., G. Seutin, J.-P. L. Savard, and G. Rompré. 2002. Habitat use by Bicknell's Thrush in the Estrie Region, Québec. Wilson Bulletin 114:333–341.

Frey, S. J. K. 2008. Metapopulation dynamics and multi-scale habitat selection of a montane forest songbird. Master's thesis. University of Vermont, Burlington, Vermont.

Hale, S. R. 2006. Using satellite imagery to model distribution and abundance of Bicknell's Thrush (*Catharus bicknelli*) in New Hampshire's White Mountains. Auk 123:1038–1051.

LaMontagne, J. M, S. Peters, and S. Boutin. 2005. A visual index for estimating cone production for individual white spruce trees. Canadian Journal of Forest Research 35:3020–3026.

Nixon, E. A., S. B. Holmes, and A.W. Diamond. 2001. Bicknell's Thrushes (*Catharus bicknelli*) in New Brunswick clear cuts: their habitat associations and co-occurrence with Swainson's Thrushes (*Catharus ustulatus*). Wilson Bulletin 113: 33–40.

Noon, B. R. 1981. The distribution of an avian guild along a temperate elevational gradient: the importance and expression of competition. Ecological Monographs 51:105–124.

Pierce-Berrin, C. 2001. Distribution and Habitat Selection of Bicknell's Thrush (*Catharus bicknelli*) in the Catskill Mountains of New York State. Master's thesis. Antioch New England Graduate School, Keene, New Hampshire.

Sabo, S. R. 1980. Niche and habitat relations in sub-alpine bird communities of the White Mountains of New Hampshire. Ecological Monographs 50:241–259.

Sullivan, Janet. 1993. *Picea rubens*. In: Fire Effects Information System, [Online]. U.S. Department of Agriculture, Forest Service, Rocky Mountain Research Station, Fire Sciences Laboratory (Producer). Available: http://www.fs.fed.us/database/feis/ [2007, December 30].

Uchytil, Ronald J. 1991. *Abies balsamea*. In: Fire Effects Information System, [Online]. U.S. Department of Agriculture, Forest Service, Rocky Mountain Research Station, Fire Sciences Laboratory (Producer). Available: http://www.fs.fed.us/database/feis/ [2007, December 30].

Mountain Birdwatch Monitoring Protocol

SOP #6: Data Submission

Version 2.0
December 2008

This Standard Operating Procedure outlines the procedure for observers to submit survey data.

I. Procedure for Submitting Data

Observers should submit completed datasheets to the regional program manager as soon after conducting the survey as possible. This ensures that data are not lost and frees the program manager from tracking down missing data. Observers should follow these steps:

1. Make sure the field datasheets are legible.
2. Transcribe field data into the appropriate tables on the datasheets.
3. Visually review each record on the datasheet to ensure accurate transcription.
4. Make one complete set of photocopies of the datasheets for personal reference and safe-keeping.
5. Enter data online (*not available at this time*).
6. Enter Bicknell's Thrush detections made outside of a count period in eBird (www.ebird.org).
7. Enclose datasheets, survey notes, and updated point descriptions in an envelope and mail to the regional program manager.
8. E-mail any updated digital photos to the regional program manager.

Mountain Birdwatch Monitoring Protocol

SOP #7: Data Management

Version 2.0
December 2008

This Standard Operating Procedure explains the procedure for management and verification of bird monitoring data.

I. Database Design

A geographically-referenced database will be used to archive and manage survey results, with standardized fields aligned with the Avian Knowledge Network (AKN; www.avianknowledge.net). The design will be based on the Mountain Birdwatch relational database which was aligned with the AKN in the fall of 2007 and the pilot database used to manage pilot data in 2008. The database will be composed of tables containing information on observers; repeated simple count data; time-of-detection data; cone mast index information; survey information; route-level and point-level geographic, habitat, and climate variables; and species information.

II. Data Entry and Verification

Discussions have been initiated with NatureCounts, the Bird Studies Canada node of AKN (http://www.birdscanada.org/birdmon//), and the USGS Bird Point Count Database (http://www.pwrc.usgs.gov/point/) to create an online data entry portal. However, the development of an online data entry portal will require considerable fundraising efforts. Therefore, for the foreseeable future, data will be entered by Mountain Birdwatch staff or data entry volunteers into a database housed on a secure server. Each regional program manager will be responsible for entering data from their region. Regional copies of the database will be synchronized on an annual basis in order to upload the data to AKN and draft annual updates.

Data verification is necessary to ensure that values recorded on the field datasheet are keyed into the database correctly. Several steps will be taken prior to, during, and after data entry to verify that data are correct and logical.

1. Visual review of transcribed data. Each transcribed record will be compared to the original record, first by the observer and again by the person entering the data.
2. Visual review after data entry. Data entered into the database will be compared visually to the transcribed records. Discrepancies will be identified and reconciled.
3. Summary queries and tallies. Error detection queries will be used to detect duplicate, omitted, or unassociated records.

Additionally, the data entry form will incorporate features that reduce errors. These will include dropdown menus for site name, observer, weather, and species codes. These values may also be entered using the keyboard, but must conform to the standardized codes. If a code is incorrectly

entered, the record will not be accepted and an error message will appear. For example, an entry of "BPWA" for Blackpoll Warbler would be rejected because the correct code for this species is BLPW. Referential integrity will also be enforced, which will prevent the entry of records that do not correspond with the possible field of values in referenced tables.

III. Metadata Procedures

Metadata that meets the standards of the USGS National Biological Information Infrastructure and the AKN will be created and available for review and download on the AKN website.

IV. Data Archival Procedures

The database will be housed on secure servers and backed up by the regional program managers on a regular basis. Survey timing, location, species, and count data will be uploaded annually to the Avian Knowledge Network. Habitat data and other information that does not conform with current AKN fields will be archived with the AKN's Northeast Avian Data Center (http://akn.nebirdmonitor.org). Access to Mountain Birdwatch data via AKN or the Northeast regional node will be subject to the prior consent of the coordinating institutions.

Mountain Birdwatch Monitoring Protocol

SOP #8: Data Analysis and Reporting

Version 2.0
December 2008

This Standard Operating Procedure explains the procedure for data analysis and reporting. Effective communication and reporting is essential to transform field data into a format that is both useful and clearly understood by land managers, scientists, the public, and policy makers.

I. Data Analysis

The Mountain Birdwatch count protocol allows abundance or density to be estimated by a variety of existing approaches (see Table 8 on page 22), while maintaining the flexibility to accommodate emerging techniques. In the near term, we will rely primarily on estimates derived from time-of-detection methods for Bicknell's Thrush (Alldredge et al. 2007) and distance sampling for all species (Rosenstock et al. 2002). Other abundance estimation techniques should be considered, depending on the purpose of the analysis, characteristics of the data set, and availability of analytical support.

Otherwise, three basic modeling approaches are expected to meet most of Mountain Birdwatch's information needs: hierarchical models to estimate trend (Link and Sauer 2002); single-species, multiple-season occupancy models to estimate occupancy, colonization, and extinction (MacKenzie et al. 2006); and random forest analysis (Breiman 2001) to model the relationship between abundance and biotic and abiotic variables.

Hierarchical (or multi-level) models are useful for estimating trend at multiple spatial scales (Link and Sauer 2002) and for producing composite trend estimates for groups of species (Sauer et al. 2002). They have the flexibility to incorporate information on observers (e.g., experience) and survey conditions (e.g., wind), which may be necessary to address variation in detection rates. Generalized additive models represent an alternative that is well-suited to handling missing data, identifying points of significant change in a time series, and assessing the importance of habitat- or climate-related covariates (Fewster et al. 2000).

MacKenzie et al. (2006) describe a variety of statistical procedures using repeated "presence-absence" surveys to estimate initial occupancy (probability that a given site is occupied) and subsequent rates of colonization and extinction. These parameters can be modeled in relation to habitat and landscape variables and used to estimate trend in occupancy over time (MacKenzie et al. 2002). Occupancy models account for issues of detectability and have been used to estimate abundance (Royle and Nichols 2003). Another advantage of an occupancy approach is the opportunity to model interactions among species. This may be important for Bicknell's Thrush, which may compete with Swainson's Thrush where the two species co-occur.

Random forest analysis (RFA; Breiman 2001), an extension of regression tree analysis (Breiman et al. 1984), is a powerful machine learning technique for modeling species distributions and

abundance across a broad array of environmental predictors (Prasad et al. 2006). RFA is capable of handling a large number of numerical and categorical variables simultaneously (e.g. habitat, landscape, and climate) and produces predictive models and quantifies the importance of each of the predictor variables (Cutler et al. 2007). Compared to traditional approaches, this technique requires little data transformation and is robust to missing values. Yet the bootstrapping routines in the model runs generates a predictive model that is robust to over fitting (Prasad et al. 2006), all the while the outputs of RFA models can be measured using conventional statistical methods for impetration and presentation.

II. Reporting Procedures and Format

Regional program managers will coordinate reporting of Mountain Birdwatch results, working in concert with the protocol development team and the International Bicknell's Thrush Conservation Group. Most reporting effort should be dedicated to timely publication and oral presentation of peer-reviewed scientific articles that address Mountain Birdwatch's goals and measurable objectives. These papers will follow formatting guidelines provided by the publishing journal. Each publication should be accompanied by a press release and a two-page synopsis written for and circulated to policy makers, land stewards, Mountain Birdwatch observers, and funding agents. These summaries should use clear and simple language in order to enhance their communication value.

More frequent reporting will be required to sustain the interest of volunteers, collaborators, and funders. To meet this need, regional program managers will jointly produce two types of regular reports, Annual Updates and periodic Analysis and Synthesis Reports. Annual Updates will include the following basic components.

1. Introduction
    a. Brief justification for monitoring high-elevation songbirds
    b. A summary of Mountain Birdwatch objectives
2. Methods
    a. A map of the survey region, depicting route locations
    b. A brief description of field methods
3. Results
    a. Simple summary statistics, including: number of participating observers, number of completed routes, the proportion of stations occupied by the target species; the number of each target species detected per route (corrected for effort)
    b. Charts depicting changes in these measures since program inception
    c. A table of completed routes and associated "presence-absence" and count information
4. Discussion
    a. Interpretation of anomalous results
    b. Targets attained and not attained
    c. Important developments
    d. Constraints, obstacles, and actions taken to overcome constraints and obstacles

e. An assessment of prospects for accomplishing stated objectives, and a projected release date for the next report on more sophisticated statistical analyses (e.g., abundance, occupancy, and/or trend estimates)

Analysis and Synthesis Reports will be jointly produced at three- to five-year intervals. These will follow a traditional scientific format (abstract, introduction, methods, results, and discussion) and include:

1. A thorough treatment of background and objectives;
2. A detailed description of the sample design, field methodology, and analytical procedures;
3. Year-by-year estimates of abundance derived from simple counts (Bart et al. 2004), repeated "presence-absence" surveys (Royle and Nichols 2003), repeated simple counts (Kery et al. 2005), time-of-removal (Farnsworth et al. 2002), time-of-detection (Alldredge et al. 2007), distance sampling (Rosenstock et al. 2002), and/or a combination of time-removal and distance sampling (Farnsworth et al. 2005);
4. Estimates of occupancy, colonization and extinction for target species;
5. Results of population size, trend, and pattern analyses completed to date; and,
6. Interpretation of test results with recommendations for changes to resource management.

Evaluation of the program, which is inherent in the process of grant competition and editorial review, will also be solicited from the U.S. Fish and Wildlife Service Population and Habitat Assessment Branch, the NABCI Monitoring Subcommittee, and the Canadian Wildlife Service at ten-year intervals.

References:

Alldredge, M. W., T. R. Simons, K. H. Pollock, and K Pacifici. 2007. A field evaluation of time-of-detection method to estimate population size and density for aural avian point counts. Avian Conservation and Ecology – Écologie et conservation des oiseaux 2(20): 13. [online] URL: http://www.ace-eco.org/vol2/iss2/art13/

Bart, J., S. Droege, P. Geissler, B. Peterjohn, and C. J. Ralph. 2004. Density estimation in wildlife surveys. Wildlife Society Bulletin 32:1242–1247.

Breiman, L. 2001. Random Forests. Machine Learning 45:5–32.

Breiman, L., J. H. Friedman, R. A. Olshen, and C. J. Stone. 1984. Classification and regression trees. Wadsworth Publishing, Belmont, CA.

Cutler, D.R., Edwards, T.C., Beard, K.H., Cutler, A., Hess, K.T., Gibson, J., and Lawler, J.J. 2007. Random forests for classification in ecology. Ecology, 88:2783–2792.

Farnsworth, G. L., J. D. Nichols, J. R. Sauer, S. G. Fancy, K. H. Pollock, S. A. Shriner, and T. R. Simons. 2005. Statistical approaches to the analysis of point count data: a little extra information can go a long way. USDA Forest Service General Technical Report PSW–GTR–191:735–743.

Farnsworth, G. L., K. H. Pollock, J. D. Nichols, T. R. Simons, J. E. Hines, and J. R. Sauer. 2002. A removal model for estimating detection probabilities from point-count surveys. Auk 119:414–425.

Fewster, R. M., S. T. Buckland, G. M. Siriwardena, S. R. Baillie, and J. D. Wilson. 2000. Analysis of population trends for farmland birds using generalized additive models. Ecology 81:1970–1984.

Kery, M., J. A. Royle, and H. Schmid. 2005. Modeling avian abundance from replicated counts using binomial mixture models. Ecological Applications 15:1450–1461.

Link W.A., and J.R. Sauer. 2002. A hierarchical analysis of population change with application to Cerulean Warblers. Ecology 83:2832–2840.

MacKenzie, D. I., J. D. Nichols, G. B. Lachman, S. Droege, J. A. Royle, and C. A. Langtimm. 2002. Estimating site occupancy rates when detection probabilities are less than one. Ecology 83:2248-2255.

MacKenzie, D. I., J. D. Nichols, J. A. Royle, K. H. Pollock, L. L. Bailey, and J. E. Hines. 2006. Occupancy Estimation and Modeling: Inferring Patterns and Dynamics of Species Occurrence. Elsevier, Amsterdam.

MacKenzie, D. I., and A. Royle. 2005. Designing occupancy studies: general advice and allocating survey effort. Journal of Applied Ecology 42:1105–1114.

Prasad, A.M., Iverson, L.R., and Liaw, A. 2006. Newer classification and regression tree techniques: bagging and random forests for ecological prediction. Ecosystems 9:181–199.

Rosenstock, S. S., D. R. Anderson, K. M. Giesen, T. Leukering, and M. F. Carter. 2002. Landbird counting techniques: current practices and an alternative. Auk 119:46–53.

Royle, J. A., and J. D. Nichols. 2003. Estimating abundance from repeated presence-absence data or point counts. Ecology 84:777–790.

Sauer, J. R., W. A. Link, and J. D. Nichols. 2002. Estimation of change in populations and communities from monitoring survey data. Pp 227-253 *In* Monitoring Ecosystems: Interdisciplinary Approaches for Evaluating Ecoregional Initiatives (D. E. Busch and J. C Trexler, eds.). Island Press, Washington, D.C.

Appendix A. Pilot Protocols Tested in June 2008

Two protocols were piloted in June 2008, repeated simple counts (Protocol A) and repeated "presence-absence" counts (Protocol B). Repeated simple count data can be simplified into "presence-absence." Both protocols were conducted over a 20-minute period simultaneous with a minute-by-minute tracking of each Bicknell's Thrush in the first ten minutes (Figure 1). The protocol decided upon for Mountain Birdwatch II is the repeated simple count concurrent with the minute-by-minute Bicknell's Thrush survey. The only change is that there is one additional distance band at 100 m for Bicknell's Thrush detections.

Basic Protocol A
Repeated simple counts

A single observer conducts four consecutive 5-min counts over a total sampling period of 20 min. During each 5-min interval, all individuals of the target species will be recorded. To reduce the risk of counting the same individual twice, a field card will be used to map the approximate location of each individual and its observed or presumed movements. Observers map the position of birds in relation to a 50-m radius and use codes to denote whether individuals are detected by hearing (h), vision (v), or both (hv). A fresh field card will be used for each 5-min interval.

Basic Protocol B
Repeated "presence-absence" surveys

The observer conducts four 5-min "presence-absence" surveys over a total sampling period of 20 min. The observer will use checkboxes to record whether each target species was detected during each 5-min interval. The form of detection (h, v, or hv) and distance categories (< 50 m or > 50 m) will also be noted.

Bicknell's Thrush Protocol
Time-of-detection surveys performed concurrently with Basic Protocols A and B (Fig. 2).

At all seven stations, the observer will collect additional information on Bicknell's Thrush during the first 10 min of the 20-min sampling period. Using a field card, the observer will map the approximate location of each individual within three distance categories (0-25 m, 25-50 m, and > 50 m), as well as its observed or presumed movements. In addition, the observer will note every minute within which each Bicknell's Thrush was detected and the corresponding form of detection (h, v, or hv). Bicknell's Thrush will receive no special attention during the second half of the 20-min sampling period.

Figure 1. Schematic diagram for Bicknell's Thrush Protocol nested within Basic Protocols A and B.

A.

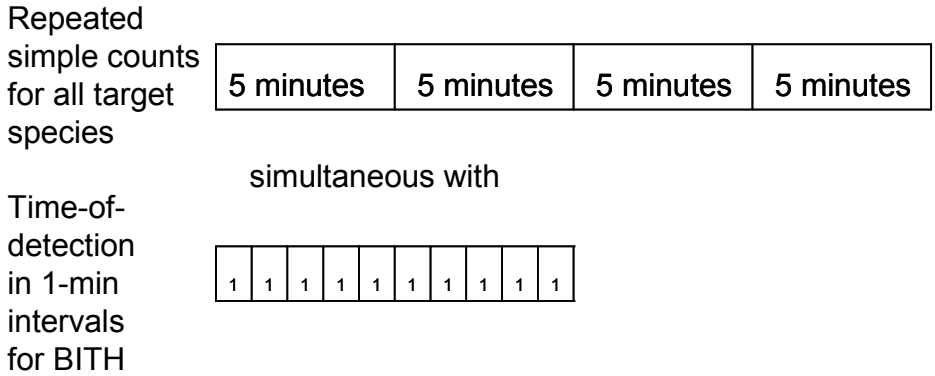

B.

Repeated p/a for all target species

5 minutes	5 minutes	5 minutes	5 minutes

simultaneous with

Time-of-detection in 1-min intervals for BITH

1	1	1	1	1	1	1	1	1	1

Appendix B. Mountain Birdwatch Datasheet

Mountain Birdwatch

Name _____ Date _____ Cloud _____

Route _____ Pt# ____ Temp (°F) _____ Wind _____

CLOUD CODES: 0 = clear or a few clouds; 1 = partly cloudy/variable; 2 = cloudy/overcast; 3 = fog; 4 = drizzle; 5 = showers; 6 = rain
WIND CODES: 0 = calm, smoke rises vertically; 1 = (1-3 mph) light air, rising smoke drifts; 2 = (4-7 mph) light breeze, leaves rustle, can feel wind on face; 3 = (8-12 mph) gentle breeze, leaves and twigs move; 4 = (13-18 mph) moderate breeze, moves thin branches, raises loose paper; 5 = (>18 mph) fresh breeze; trees sway; GO HOME!

PROTOCOL REMINDERS

* The most important thing is your safety. Be prepared! Check the weather forecast for the high elevation before you head into the field and pack proper gear. Bring a cell phone and a friend.
* Please follow local camping regulations and practice leave no trace guidelines.
* Before you begin the count, fill in the top of this datasheet using the weather codes above.
* The dashed distance bands on the circle plots are only for estimating the distance to each BITH. For all other species, you only need to mark it as in or out of the 50-m radius.
* Record each minute you detect each individual BITH below the code marking its location on the circle plot. Use the minutes on your stopwatch as the minute it is detected, such that a bird heard 30 seconds after the start of the count is recorded as 0H ('0' for 0:30 and 'H' for heard).
* Continue tracking each individual BITH for the first 10 minutes using the SAME id number for each individual. For example, if BITH1 is only heard in the first five minutes and BITH2 is heard in both the first five minutes and the second five minutes, still record it as BITH2 in the second period even though you arevusing a separate circle plot.
* Record whether you heard (H) or saw (V) each individual bird. For BITH, write the observation code next to the minute you detected it in (e.g., 1H, 2H, 3V). For each of the other species, use the observation symbols shown below to keep track of whether each was heard or seen and to track the movements of individual birds.
* After the count, conduct the cone count protocol and record the data below.
* When you return home, transcribe your data into the boxes provided. Make photocopies for your records and mail to your host organization.

CONE COUNT: Find the NEAREST balsam fir in each cardinal direction that is at least 4 m tall or 2/3 canopy height and of which you have an unobstructed view of the top 3 m. Count all visible cones. Repeat for the NEAREST red spruce of canopy height. If there are no red spruces visible, note on the datasheet that there were no trees present with an 'X' to distinguish from there being no cones on the tree. Balsam fir cones point up and red spruce cones hang down. Only count the green cones from this year.

#Balsam Fir:	#Red Spruce:
N _____	N _____
S _____	S _____
E _____	E _____
W _____	W _____

OBSERVATION SYMBOLS:

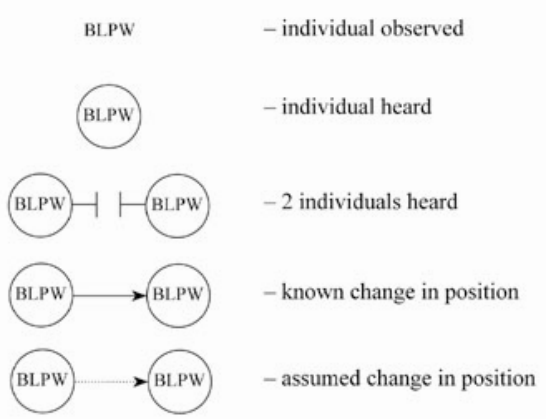

Appendix B. Mountain Birdwatch Datasheet (continued)

1 **0:00 - 4:59**

Actual Start Time: _____

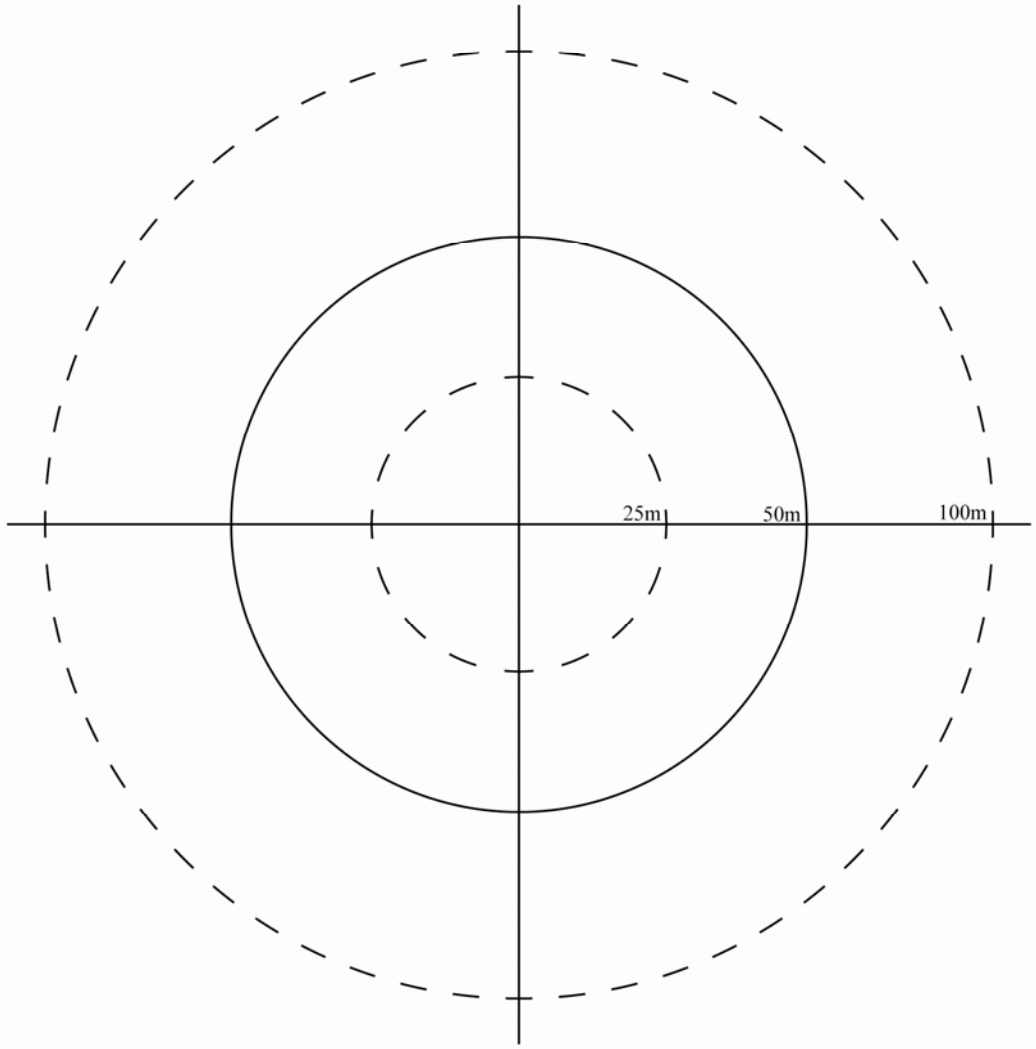

	< 50 m		> 50 m	
	#H	#V	#H	#V
YBFL				
BCCH				
BOCH				
WIWR				
BITH				
SWTH				
HETH				
BLPW				
WTSP				
FOSP				
RESQ				

Indicate the observation type and distance category of each BITH observation. Observation codes: h = heard; v = visual. Distance codes: 1 = 0-25 m; 2 = 25-50 m; 3 = 50-100 m; 4 = >100 m.

	0obs	0dis	1obs	1dis	2obs	2dis	3obs	3dis	4obs	4dis
BITH1										
BITH2										
BITH3										
BITH4										

Appendix B. Mountain Birdwatch Datasheet (continued)

Name _____ Location _____ Date _____

2 **5:00 - 9:59**

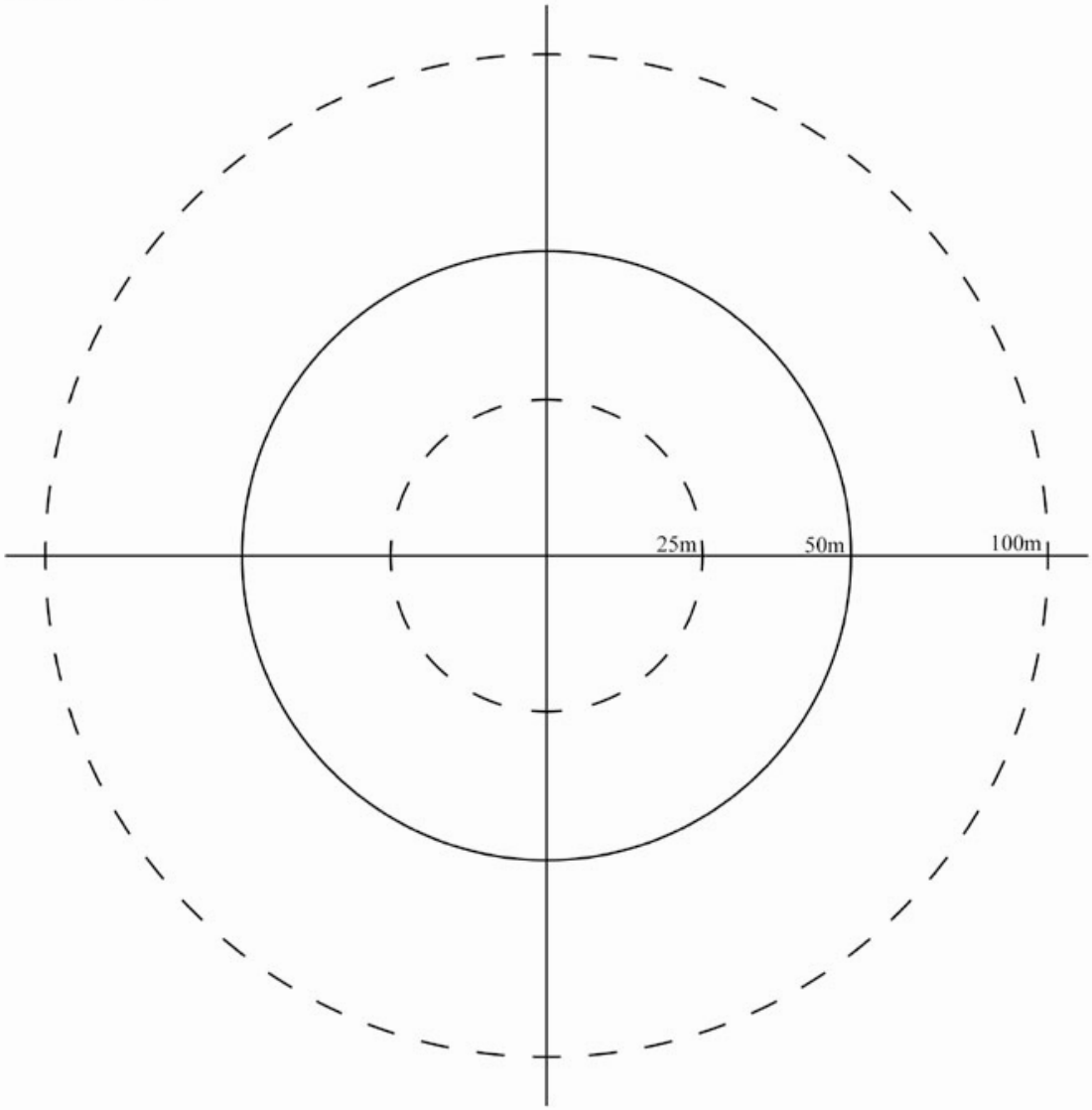

	< 50 m		> 50 m	
	#H	#V	#H	#V
YBFL				
BCCH				
BOCH				
WIWR				
BITH				
SWTH				
HETH				
BLPW				
WTSP				
FOSP				
RESQ				

Indicate the observation type and distance category of each BITH observation. Observation codes: h = heard; v = visual. Distance codes: 1 = 0-25 m; 2 = 25-50 m; 3 = 50-100 m; 4 = >100 m.

	5obs	5dis	6obs	6dis	7obs	7dis	8obs	8dis	9obs	9dis
BITH1										
BITH2										
BITH3										
BITH4										

Appendix B. Mountain Birdwatch Datasheet (continued)

3 10:00 - 14:59

	< 50 m		> 50 m	
	#H	#V	#H	#V
YBFL				
BCCH				
BOCH				
WIWR				
BITH				
SWTH				
HETH				
BLPW				
WTSP				
FOSP				
RESQ				

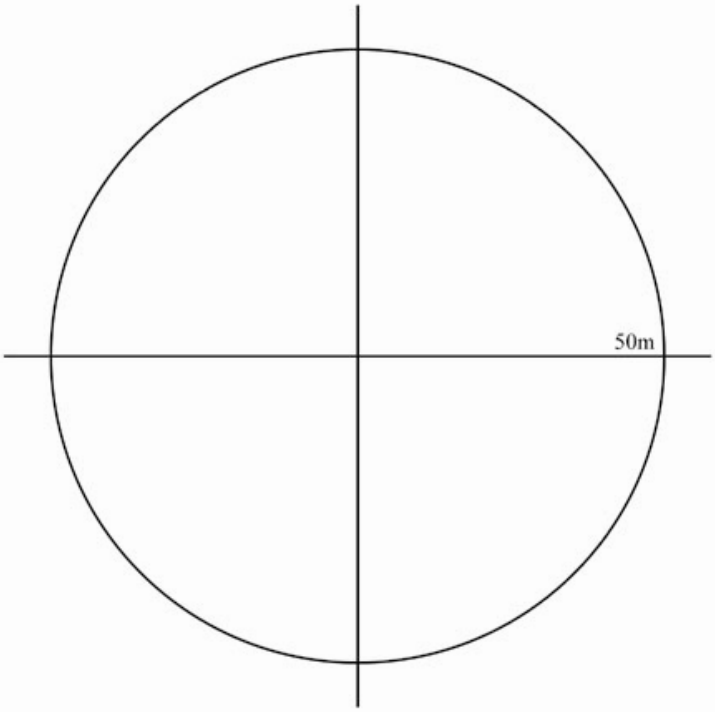

4 15:00 - 19:59

	< 50 m		> 50 m	
	#H	#V	#H	#V
YBFL				
BCCH				
BOCH				
WIWR				
BITH				
SWTH				
HETH				
BLPW				
WTSP				
FOSP				
RESQ				

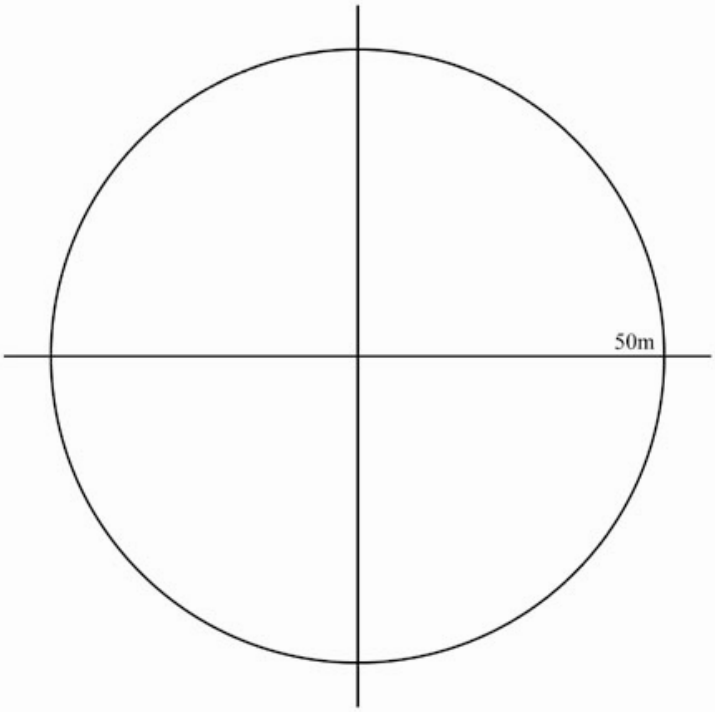

Appendix C. Sample Datasheet

1 **0:00 - 4:59**

Actual Start Time: 4:31

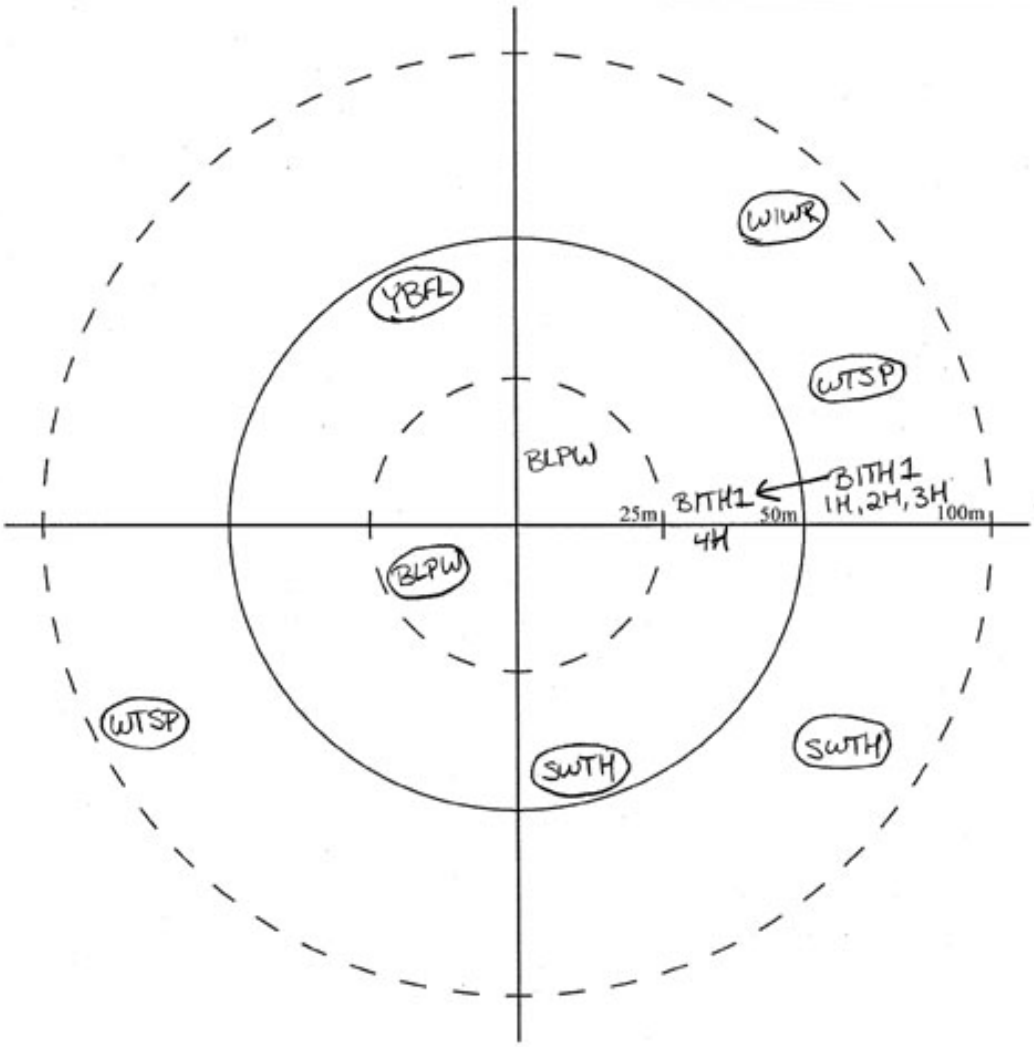

	< 50 m		> 50 m	
	#H	#V	#H	#V
YBFL	1			
BCCH				
BOCH				
WIWR			1	
BITH			1	
SWTH	1		1	
HETH				
BLPW	1	1		
WTSP			2	
FOSP				
RESQ				

only record each individual once at the distance it was first detected

Indicate the observation type and distance category of each BITH observation. Observation codes: h = heard; v = visual. Distance codes: 1 = 0-25 m; 2 = 25-50 m; 3 = 50-100 m; 4 = >100 m.

	0obs	0dis	1obs	1dis	2obs	2dis	3obs	3dis	4obs	4dis
BITH1	—	—	H	3	H	3	H	3	H	2
BITH2										
BITH3										
BITH4										