HOPEWELL FURNACE NATIONAL HISTORIC SITE

HISTORIC RESOURCE STUDY
FINAL

Prepared for
the National Park Service

by Robinson & Associates, Inc.

in association with
architrave p.c. architects

December 1, 2004

TABLE OF CONTENTS

LIST OF ILLUSTRATIONS 1

ACKNOWLEDGEMENTS 2

NPS ADMINISTRATIVE BACKGROUND 2
National Register Status 2
List of Classified Structures Status 3
Cultural Landscape Report Status 3
Archeological Overview Status 3
Status of Resource Management Planning 3

INTRODUCTION 4
Location and History 4
Purpose of Study 7
Methodology 7

EXECUTIVE SUMMARY 10

CHAPTER I: REGIONAL HISTORY PRIOR TO THE ESTABLISHMENT OF HOPEWELL FURNACE 13
Prehistoric Southeastern Pennsylvania 13
European Settlement and the Departure of the Lenni Lenape 14
Berks and Chester Counties 17
Early Pennsylvania Iron Industry 19

CHAPTER II: CONSTRUCTION, GROWTH, AND DECLINE OF THE FURNACE, 1771-1883 22
Establishment by Mark Bird 22
Hopewell Furnace and the American Revolution 26
Bird's Debts and the Loss of Hopewell Furnace 28
The Struggle to Become Profitable 30
Prosperity 33
From Stove Plates to Pig Iron 35

CHAPTER III: WORKERS, HOUSING, AND COMMUNITY AT HOPEWELL FURNACE, 1771-1883 40
The Work Force and Its Housing 40
Mount Frisby African Methodist Episcopal Church and the Underground Railroad 56

CHAPTER IV: TRANSITION FROM INDUSTRIAL TO AGRICULTURAL USE, 1883-1934 59

CHAPTER V: THE NEW DEAL AND THE CREATION OF A NATIONAL HISTORIC SITE, 1934-1946 64
French Creek Recreational Demonstration Area 64
From RDA to National Historic Site 69
The Work of New Deal Relief Programs at Hopewell Village 71
The National Historic Site during World War II 81

CHAPTER VI: THE EVOLUTION OF HOPEWELL VILLAGE/HOPEWELL FURNACE, 1947-PRESENT ……. 85
Repair and Debate in the Post-War Park ……. 85
Mission 66 Planning at Hopewell…….90
The Mission 66 Visitor Center …….92
Restoration under Mission 66 ……...99
After Mission 66 …….. 107
Collections at Hopewell Furnace…….. 111

RECOMMENDATIONS FOR FURTHER RESEARCH …….. 116

ANNOTATED BIBLIOGRAPHY …… 118

REPOSITORIES CONSULTED …….. 127

APPENDICES ……. 128
Appendix A: List of Classified Structures…… 129
Appendix B: Cultural Landscape Report Resources List …… 133
Appendix C: List of Contributing and Noncontributing Resources……. 134
Appendix D: Corrections to Historic Base Maps……. 142

LIST OF ILLUSTRATIONS

Figure 1	Hopewell Furnace National Historic Site	5
Figure 2	A typical cold-blast furnace	20
Figure 3	The reconstructed West Head Race, originally built circa 1805	31
Figure 4	The reconstructed furnace complex at Hopewell, including the Cleaning Shed, Cast House, Furnace Stack, Bridge House, Connecting Shed, and Charcoal House	35
Figure 5	The Wheel House, Bridge House, and Connecting Shed, reconstructed to their appearance in 1879	39
Figure 6	Evolution of the north elevation of the Ironmaster's House	43
Figure 7	Spring House on the grounds of the Ironmaster's House	45
Figure 8	Tenant housing along the Birdsboro-Warwick Road	48
Figure 9	Ruins of the Woodlot House, a furnace-owned tenant house outside the village	52
Figure 10	The Thomas Lloyd House, now used as a residence for a park Employee	54
Figure 11	The Wamsher House in French Creek State Park, once part of an independent farm whose residents appear in furnace records	56
Figure 12	Mount Frisby African Methodist Episcopal Church, now a garage, which served the needs of African Americans living in the Six Penny Creek area	58
Figure 13	The modern dairy barn, as seen beyond the ruins of the furnace stack in 1935	60
Figure 14	The furnace complex in 1887, showing the location of the Wheelwright-Carpenter's Shop and the Ore Roaster.	62
Figure 15	From the 1937 Base Map for Hopewell Village National Historic Site, showing location of CCC Camp SP-7 north of the furnace and proposed locations of the parking area (inset) and bypass road	67
Figure 16	Civilian Conservation Corps Pump House	68
Figure 17	Parking area near the Baptism Creek Picnic Area, circa 1940	73
Figure 18	Baptism Creek Picnic Shelter and Concession Building, circa 1940	74
Figure 19	CCC-constructed vehicle bridge foundations near Baptism Creek Picnic Area, now supporting a 1998 pedestrian bridge	76
Figure 20	CCC-constructed springhouse near Baptism Creek Picnic Area	77
Figure 21	Furnace stack during CCC stabilization	79
Figure 22	Blast machinery and water wheel, 1951	89
Figure 23	Quarters 99, constructed during the Mission 66 program	96
Figure 24	Archeological work at the Cast House site, 1962	103
Figure 25	Stone steps (foreground) north of the Ironmaster's House	105
Figure 26	The Ironmaster's House, rehabilitated in 1980-81	109
Figure 27	Bethesda Church, restored in 1982	110
Figure 28	The Bally Building, location of Hopewell's artifacts and archives	113

ACKNOWLEDGEMENTS

Numerous people contributed to this project, lending their time and expertise to Robinson & Associates' efforts. We would like to thank Superintendent William Sanders and his staff for their assistance during two research visits to the park. Especially to be commended are Cultural Resource Manager Rebecca Ross and Chief Ranger Jeffrey Collins. Ross provided photocopies of numerous documents held in Hopewell's library, facilitated the review of hundreds of documents and photographs held in the park's library and archives, and answered a constant stream of questions. Collins efficiently guided a tour of resources outside the historic site's core, as well as outside the park, that communicated important aspects of park history in their appropriate setting, such as the Civilian Conservation Corps era. Seasonal employee John Cole acted as guide for a visit to an important resource outside the park, Mount Frisby Church, which is owned by his family. Staff at the National Park Service's Northeast Regional Office in Philadelphia provided valuable assistance, especially Project Manager Dr. Clifford Tobias, who offered insightful input throughout the term of the study; facilitated communication between the park, the regional office, and the consultants; and reviewed monthly reports and draft submissions. He also consolidated reviewers' comments on drafts of this study, which greatly aided the revision of the HRS. Robinson & Associates would like to thank all the reviewers of the study's drafts for their close attention to the text and thoughtful guidance, especially Ross, Collins, Tobias, Paul Weinbaum, Jed Levin, and Nancy Brown. Their special attention to previously unanalyzed resources – CCC-era archeological sites, Mission 66 construction, and Hopewell Furnace's collections of artifacts and documents – enabled Robinson & Associates to provide an informed evaluation of their significance. Historical Architect Stephen Clark allowed the consultants access to Hopewell's List of Classified Structures, provided photocopies of several drawings from the park's Mission 66-era construction, and perceptively reviewed early drafts of the HRS. Archives Specialist Gail Farr of the Northeast Branch of the National Archives in Philadelphia conducted research in the branch's internal database prior to a research visit that facilitated efficient review of the numerous documents held at the repository. Thanks should also be accorded to Dr. Leah Glaser, who shared research experience gained in compiling the administrative history of Hopewell Furnace.

NPS ADMINISTRATIVE BACKGROUND

National Register Status

Hopewell Village National Historic Site was documented in the National Register of Historic Places on August 30, 1985. (The site's name was changed to Hopewell Furnace in November 1985.) The National Register documentation cited architecture, industry, and military (American Revolution) as the site's areas of significance. The designated periods of significance were 1700-1799 and 1800-1899, with 1771-1883 – the furnace's entire period of operation – noted as the specific dates of significance. Fifty contributing resources were singled out in the National Register documentation. Twenty-one other resources were described as "nonconforming intrusions." In 1994, the Baptism Creek Picnic Shelter and Concession Building was determined to be eligible for inclusion as a contributing resource in Hopewell Furnace's National Register

documentation due to its association with Franklin Delano Roosevelt's New Deal programs, specifically the Civilian Conservation Corps. A portion of the national historic site in Chester County (281.1 acres) was also included in the North Warwick Historic and Archaeological District, which was listed in the National Register in 1995. The portion of Hopewell land contained within the historic district includes the Thomas Lloyd House, Bethesda Church, as well as its cemetery and carriage shed, the Brison and Harrison Lloyd house sites, and charcoal hearth sites. "Emergency Conservation Work (ECW) Architecture in Pennsylvania State Parks, 1933-1942, Thematic Resources," a 1987 National Register document, addressed two historic districts in French Creek State Park (CCC Camp SP-17 and Six Penny Lake Day Use districts), but did not cover resources located at Hopewell Furnace National Historic Site.

List of Classified Structures Status

Hopewell Furnace's List of Classified Structures was compiled in 1994 and was last updated in the summer of 2003. It contains 76 resources. This list can be found in Appendix A.

Cultural Landscape Report Status

KFS Cultural Resources Group of Philadelphia prepared a *Cultural Landscape Report* for the National Park Service in 1997. This document contained a list of 154 resources, 101 of which were determined to be contributing, 53 of which were evaluated as noncontributing. This list is contained in Appendix B.

Archeological Status

Hopewell Furnace National Historic Site: An Archeological Overview and Assessment, a study being conducted by John Milner Associates, was in draft form in November 2004. The study's evaluation of National Register significance of archeological sites at Hopewell Furnace informed the HRS's list of contributing/noncontributing resources, which can be found in Appendix C.

Status of Resource Management Planning

Hopewell Furnace operates under a Master Plan approved by the National Park Service on September 21, 1964. An updated master plan created in 1972 was not approved. In 1993, a Statement for Management, Resource Management Plan, and Long Range Interpretive Plan were completed. KFS Cultural Resources Group prepared a *Cultural Landscape Report* and an *Adjacent Lands Study* in 1997. Currently underway are an administrative history of the park and an archeological overview and assessment. The *CLR*, *Adjacent Lands Study*, administrative history, archeological O&A, and HRS were undertaken to provide information to be used in creating the park's first General Management Plan. This plan will include a description of park resources, a discussion of their significance, and treatment approaches.

INTRODUCTION

Location and History

Hopewell Furnace National Historic Site encompasses 848.06 acres of land in southeastern Pennsylvania. (Figure 1) The furnace site straddles the border between Berks and Chester counties and stands astride French Creek, a tributary of the Schuylkill River, which flows from the Appalachian Mountains across the Pennsylvania Piedmont and empties into the Delaware River at Philadelphia, 40 miles from Hopewell. The majority of the central historic area is approximately 500 feet above sea level, while the highest point within park boundaries, near its northern border, is approximately 900 feet above sea level.

Southeastern Pennsylvania had already become known for its furnaces, forges, and bloomeries by the time Mark Bird began his iron-making operation at Hopewell about 1771. Bird actively supported the American Revolution and served as deputy quartermaster for the Continental Army, and it seems likely that Hopewell Furnace supplied cannon and shot for the American forces. Due to the financial difficulties of Bird and other early owners, Hopewell Furnace was sold several times in the eighteenth century before being purchased by the Buckley and Brooke families in 1800. These families retained ownership of the property until the Federal government purchased it in 1935. The furnace reached its peak of production and prosperity during the 1830s under the direction of manager Clement Brooke, and went out of blast for the final time in 1883.

During its period of operation, which lasted from 1771 to 1883, the iron-making complex at Hopewell comprised several buildings, including the furnace, wheel house, bridge house, connecting shed, cast house, and various sheds and shops. The operation produced pig iron and cast iron products such as stove plates and kettles, employing, for most of its history, the "cold blast" method of iron production and using charcoal for fuel. In this process, a blast of cold air provided by bellows or "blowing tubs" intensified the furnace's heat to smelting temperature. Cold blast furnaces required certain natural resources – iron ore, wood to make charcoal, limestone for the smelting process, and water to power the blast machinery – that were readily available in the Schuylkill valley.

The large tracts of land and numerous workers needed for such an operation resulted in the development of what have been called iron plantations, of which Hopewell Furnace is an example. Something like the agricultural plantations of the southern United States, these communities sought self-sufficiency. They provided housing and food for workers; raw materials, technical expertise, and machinery for production; and marketing and transportation systems to deliver products for sale. The landscape of Hopewell Furnace during its period of operation was therefore many times as large as the National Historic Site and consisted of the furnace complex, tenant housing for workers, the ironmaster's house, farmland, tracts of cut and uncut forests marked with charcoal pits and colliers' huts, roads, vehicles, and animals, as well as the refuse associated with an industrial operation and a community of more than 100 people.

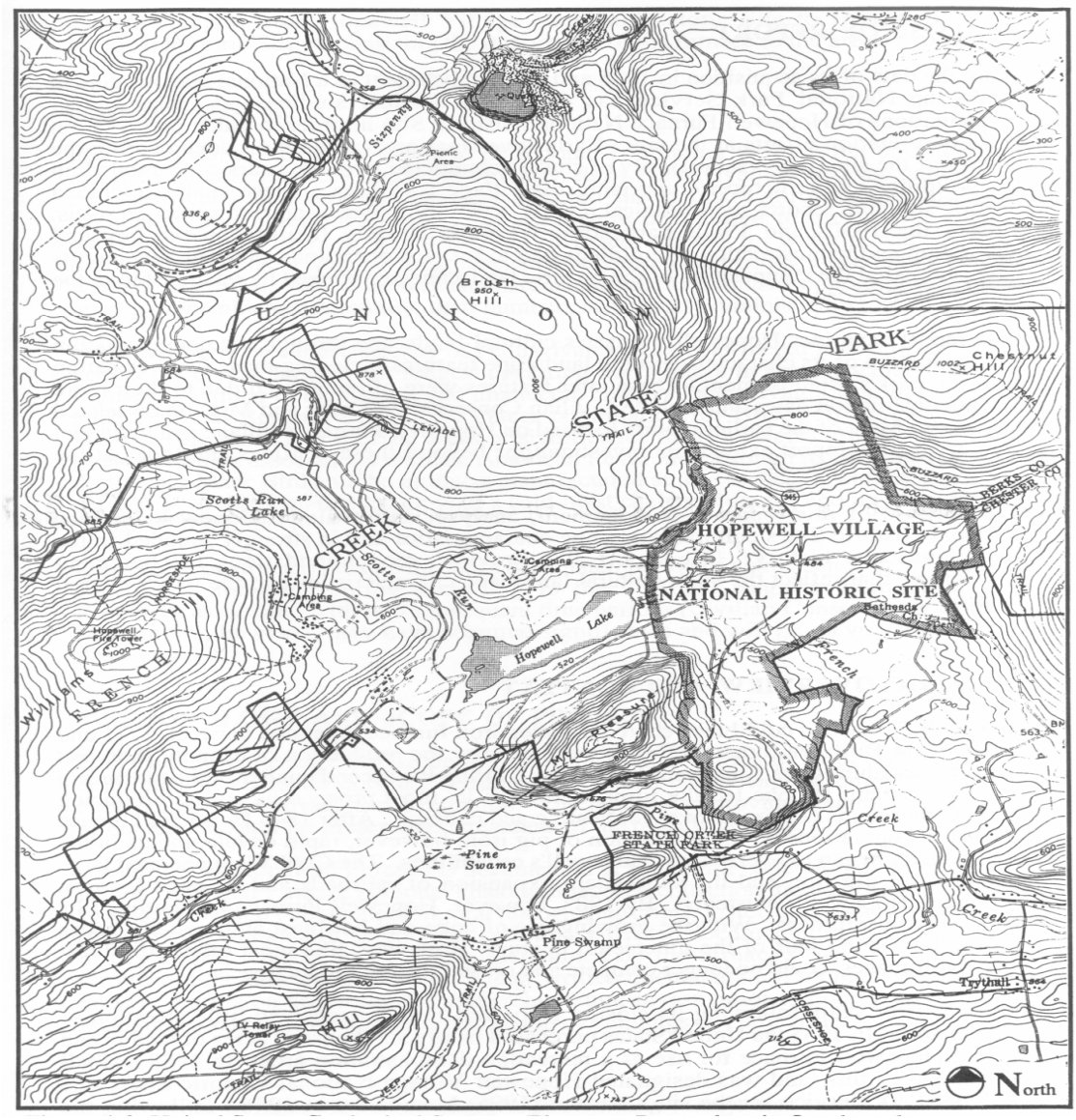

Figure 1 – Hopewell Furnace National Historic Site. (United States Geological Survey, Elverson, Pennsylvania Quadrangle, 7.5 Minute Series, 1956, revised 1974, detail.)

The National Historic Site includes representative examples of most of the kinds of structures – restored or reconstructed – that existed when the furnace was in operation. Numerous other historic resources associated with the furnace operation, such as farmsteads and charcoal hearths, are also extant outside the boundaries of the historic site, especially in French Creek State Park, the majority of which was also created from former furnace land.

By the middle of the nineteenth century, new technologies, particularly the use of anthracite coal as fuel, began to supersede the charcoal technology employed at Hopewell Furnace. Hopewell stopped making the stove plates for which it had become well known in 1844. The Civil War and the post-war expansion of American railroads provided a market for Hopewell's pig iron for some decades after its blast machinery had become outdated, but technological advances eventually made the furnace unprofitable, forcing its closure. The furnace complex slid into decay in the years after it ceased operating.

Agricultural use of the property and the decay of the furnace buildings continued for nearly a half century until the 1930s, when the Resettlement Administration of Franklin Delano Roosevelt's presidency began to buy submarginal farmland across the country for conservation and recreational uses during the Depression. In 1935, the Federal government purchased 6,200 acres of land around the furnace complex on which to develop the French Creek Recreational Demonstration Area (RDA), one of a number of sites purchased by the government nationwide and converted to recreational use. Two camps of Civilian Conservation Corps (CCC) workers were established in the area to build roads, trails, shelters, and fireplaces. Camp SP-17 was constructed in what is now French Creek State Park. Camp SP-7 was constructed north of the furnace complex where the historic site's maintenance complex now stands. The camp also occupied buildings associated with the furnace for administrative purposes. As a result of its association with the CCC, the Picnic Shelter and Concession Building at Baptism Creek, which lies within the National Historic Site boundaries, has been deemed eligible for nomination to the National Register of Historic Places.

Alerted to the historic importance of the buildings in the RDA by CCC architect Gustavus Mang, two National Park Service historians, Ronald F. Lee and Roy E. Appleman, subsequently established a basic history of the iron-making facilities and their connections to Mark Bird. Both Lee and Appleman suggested to National Park Service officials the potential for the preservation of the iron-making complex for educational purposes. Acting Secretary of the Interior E.K. Burlew designated approximately 214 acres of the French Creek RDA as Hopewell Village National Historic Site on August 3, 1938. In 1942, the historic site was enlarged to encompass all the lands within the French Creek RDA to simplify administration of the area during World War II. By 1946, however, the historic site was limited to the current 848.06 acres; the remaining land was transferred the following year to the Commonwealth of Pennsylvania, which turned it into French Creek State Park.

Although CCC and other New Deal relief program workers performed archeological work and stabilized some buildings at Hopewell before the program ended in 1942, a lack of funding during and just after World War II kept Hopewell from being fully restored until the Park Service's

Mission 66 program. Of the more than 40 historic buildings, structures, and ruins within the historic site's boundaries, nearly half received attention during Mission 66. Most of the major reconstructions at the site – including the Bridge House, the Connecting Shed, the Cast House, the Cleaning Shed, the Cooling Shed, and the Furnace Bank and Retaining Wall – were undertaken during this period. Hopewell's Visitor Center and parking area, as well as its maintenance and utility buildings and residences, were also constructed as a result of the Mission 66 program. Restoration and maintenance has continued as warranted by needs and funds. The park was documented in the National Register of Historic Places in 1985, the same year that its official name was changed from Hopewell Village National Historic Site to Hopewell Furnace National Historic Site.

Purpose of the Study

This Historic Resources Study (HRS) is designed to provide an overview of the historical resources that now make up Hopewell Furnace National Historic Site and, to a lesser extent, to address resources directly related to the furnace operation that stand outside park boundaries. The slow development of the park during the 30 years that elapsed between the site's selection and the conclusion of the Mission 66 program witnessed considerable turnover in personnel at Hopewell, changing attitudes toward preservation and interpretation, and fluctuations in park funding and supervision. By synthesizing available cultural resource information and supplementing it with original primary research, the HRS seeks to bring together in a coherent narrative the history of the extant resources that constitute the park and the forces that influenced their current status. The study provides the necessary background material to support future expanded National Register documentation for the historic site.

The HRS identifies and evaluates resources found within the park as contributing or noncontributing to the significance of the historic site. It addresses resources not previously evaluated, such as the park's collections of archival materials, artifacts, and vehicles, as well as Mission 66-era construction. The HRS also reevaluates resources previously considered noncontributing, such as those resources related to the Civilian Conservation Corps. The contributing/noncontributing status of related resources outside park boundaries is not included in this study. The status of archeological sites has been derived from pre-existing studies, as specified in the contract for the HRS. The contributing and noncontributing status of archeological sites is taken directly from the *Cultural Landscape Report* completed by KFS Cultural Resources Group in 1997, from the *Cultural Landscape Inventory: Hopewell Furnace Landscape* (2003), and from a working draft of the *Hopewell Furnace Archeological Overview and Assessment* by John Milner Associates (November 2004).[*] The contributing/noncontributing status of archeological sites not addressed by these documents was declared "to be determined." Another task undertaken by the HRS has been to correct, where necessary, the historic base maps created in the Cultural Landscape Report.

[*] Robinson & Associates received the *Archeological Overview and Assessment* after the National Park Service submitted comments on the 100 percent draft of the HRS. As agreed to by NPS, the O&A was consulted only to assess the contributing/noncontributing status of the park's archeological sites.

Methodology

Research for the report was conducted during the first six months of 2003 and took five primary forms: 1) on-site analysis of resources; 2) review of internal park documents, especially historic structures reports housed at the historic site's library, but also including documents from the National Park Service Philadelphia Support Office, now the Northeast Regional Office (NERO-P); 3) primary research at the National Archives branch in College Park, Maryland, which was primarily concerned with the site's initial development and the work of the Civilian Conservation Corps at Hopewell; 4) primary research at the National Archives branch in Philadelphia on initial development, the CCC, and Mission 66; 5) secondary research on iron-making technology, Pennsylvania history, the Underground Railroad, and vernacular architecture in the Middle Atlantic states. The consultants also contacted the historical societies of Berks and Chester counties to discuss potential sources of information at those repositories and conducted online research in the collections of the Pennsylvania Historical and Museum Commission. In addition, Robinson & Associates consulted with Dr. Leah Glaser, who had already conducted research in these three locations for her administrative history of the national historic site, and concluded that these repositories contained no important information that was not also available in other locations.

Due to the lack of detailed documentation from the period of the furnace's operation, the National Park Service's early inexperience with preserving and interpreting industrial sites (Hopewell was its first), and the relatively slow development of the historic site, which was accompanied by a regular turnover of research and restoration staff, studies of Hopewell's resources have been voluminous and have sometimes yielded conflicting conclusions. Research, analysis, and evaluation for this report therefore focused on a comparison of the information used by the park's administrators, architects, and historians to establish a consistent chronology for the park's resources and to understand the bases by which they were restored or reconstructed. From the beginning of the park's creation, Hopewell's historians have lamented the absence of definitive information on the dates furnace buildings were constructed. Those charged with restoring the buildings have subsequently relied on a variety of data to make their determinations. This range of information and approach has occasionally resulted in a wide divergence of opinions on the age of specific buildings.

For instance, in 1962, historian Earl J. Heydinger dated the earliest portion of the Boarding House to circa 1770, based on its central fireplace, which Heydinger felt was characteristic of late eighteenth-century structures. Russell A. Apple, who compiled *Documentation for Historic Base Maps* for Hopewell in 1956, placed the construction date at 1806, based on his estimate of the perches of stone used in its construction, which roughly matched a construction entry in the Hopewell records. Archeologist Leland Abel based his estimate of the building's date (1830) on artifacts discovered in digs around the building. Since Heydinger, Apple, and Abel arrived at their construction dates using different criteria and did not address the criteria used by the other experts, it is difficult to categorically refute any of their estimates, and no other documents reviewed clarified the date of this building. The estimated dates also span three very different periods of the furnace's history – its colonial beginnings, its early national period struggle for profitability, and its era of greatest prosperity – so that the determination of the building's date

bears strongly on its interpretation. Due to the relative frequency of such disagreements over construction dates, the Historic Resources Study has emphasized a comparison of building dates cited in various studies and an analysis of their supporting data. It is hoped that this procedure will yield a chronology of building at Hopewell that synthesizes all these previous studies. Where unresolvable conflicts are discovered, supporting arguments are outlined in footnotes to the text.

The dates of several buildings remain difficult to pinpoint, making an accurate chronological narrative of the development of Hopewell's buildings and structures that does justice to the complexities of dating the buildings nearly impossible. As a result, a two-step approach has been taken in the HRS to narrate the history of the buildings during the period of the furnace's operation. One chapter has been devoted to the furnace complex itself, and another addresses worker housing and community life. In this way, the history and function of each building involved in the iron-making operation can be addressed efficiently in one place in the HRS – with the result that the furnace and its community can be understood as the sum of these component parts.

Spelling and capitalization for Hopewell's buildings, structures, and objects, which varies in the different documents reviewed for this study, have been taken from the park's List of Classified Structures. To differentiate between existing and no longer extant resources, the names of extant resources have been capitalized in the text.

EXECUTIVE SUMMARY

Hopewell Furnace National Historic Site encompasses 848.06 acres of land associated with the iron-making operation begun by Mark Bird in 1771 in southeastern Pennsylvania. The furnace and surrounding acreage were sold several times in the eighteenth century before being purchased by the Buckley and Brooke families in 1800. These families retained ownership of the property until the Federal government purchased it in 1935. The furnace reached its peak of production and prosperity during the 1830s. By the middle of the nineteenth century, however, new technologies began to supersede the method of production employed at Hopewell. The Civil War and the expansion of American railroads provided a market for Hopewell's pig iron for some decades after this time, but technological advances eventually made the furnace unprofitable, forcing its closure. The furnace went out of blast for the final time in 1883.

The Brooke and Buckley families expanded their land holdings after the furnace ceased operation and continued to profit from the sales of wood, charcoal, iron ore, and stone and from farming. These uses persisted for more than half a century until 1935, when the Federal government purchased 6,200 acres of land in the area, including the furnace complex, to create the French Creek Recreational Demonstration Area (RDA). Two camps of Civilian Conservation Corps (CCC) workers were established in the area to build roads, trails, shelters, and fireplaces. Alerted to the historic importance of the buildings in the RDA, the National Park Service sought to preserve the iron-making complex. Acting Secretary of the Interior E.K. Burlew designated approximately 214 acres of the French Creek RDA as Hopewell Village National Historic Site on August 3, 1938. In 1942, the historic site was enlarged to encompass all lands within the French Creek RDA. By 1946, however, the historic site was limited to the current 848.06 acres, and the remaining land became French Creek State Park.

Although the CCC and other New Deal work relief programs contributed to the stabilization of furnace structures, Hopewell was not fully restored until the Park Service's Mission 66 program provided funding. Most of the site's major restorations and reconstructions were undertaken during this period. Hopewell's Visitor Center, overflow parking area, maintenance and utility buildings, and residences were also constructed as a result of the Mission 66 program. The park was documented in the National Register of Historic Places in 1985, the same year that its official name was changed from Hopewell Village to Hopewell Furnace National Historic Site.

The period between the site's historic designation and the Mission 66 program witnessed considerable turnover in personnel at Hopewell and changing attitudes toward preservation and interpretation, as well as fluctuations in park funding and supervision. Due to these factors, studies of Hopewell's resources have sometimes yielded conflicting conclusions regarding their dates of construction. Research, analysis, and evaluation for this Historic Structures Report (HRS) therefore focused on a comparison of the information compiled by the park's administrators, architects, archeologists, and historians to establish a consistent chronology for the park's resources and to understand the bases by which they were restored or reconstructed. This evaluation has posited dates for certain buildings that differ from, or broaden the range of, construction dates cited in other documents, such as the National Register documentation and the

List of Classified Structures. The total number of changes in the chronology of Hopewell construction is small relative to the total number of resources in the park, but they include prominent features such as the John Church House, the Boarding House, and all three tenant houses. Furthermore, the study has revealed the importance during the period of furnace operation of a building type, the log house, not represented by extant resources.

Due to the long history of the park's development, a goal of the HRS was to evaluate park resources that postdate furnace operation. As has been mentioned, the CCC executed much of the early work at the site, and one CCC structure, the Baptism Creek Picnic Shelter and Concession Building has been previously deemed eligible for the National Register. In addition to the eligibility of the picnic shelter, the HRS has added small-scale objects, such as the fireplaces, water fountains, and springhouses. The potential contribution of CCC-era archeological sites to the park's history has also been addressed. Since many of these resources have not been the focus of archeological investigation, however, evaluation of their contributing/noncontributing status has been deferred until such investigation can be completed or until an ongoing *Archeological Overview and Assessment* determines their status. The HRS also evaluated Mission 66-era resources at Hopewell, including the Visitor Center, and concluded that they do not meet the criteria of exceptional significance required of resources less than 50 years old. Mission 66-era resources have therefore been categorized as noncontributing at this time but should be reevaluated then they reach 50 years of age in 2009. A final category of resources for which National Register significance has been evaluated for the first time in the HRS include the park's collections of furnishings, archeological artifacts, vehicles, and archival material. Both the archeological artifacts and archival material associated with the operation of the furnace were deemed contributing. The furnishings and vehicles collections were deemed noncontributing due to their lack of integrity, based on descriptions contained in the park's *Collection Management Plan.* It should be noted that, should the integrity of smaller collections within the furnishings and vehicles collections be established, those smaller groups could earn contributing status. The smaller groups within the larger collections are those furnishings associated with the furnace itself and the vehicles reconstructed by the Civilian Conservation Corps using original hardware. Correspondence with members of the park staff and with experts in the NPS Northeast Region offices in Philadelphia and Boston greatly helped the evaluation process and resulted in consensus on the contributing/noncontributing status of Hopewell Furnace resources.

This study evaluated 132 total resources. Ninety-five were deemed contributing, 34 non-contributing, and the status of 3 archeological sites remain to be determined. The contributing resources include 40 structures, 32 buildings, 16 sites, and 7 small-scale features, objects, or collections of objects. Noncontributing resources consist of 16 structures, 9 buildings, and 9 small-scale features. The three archeological sites have been labeled "to be determined" due to the lack of definitive evaluation in existing studies.

The HRS also highlighted the ways in which attitudes toward preservation, National Park Service management philosophies, funding, and other issues affected the physical fabric of the resources, and therefore visitors' experience, of Hopewell Furnace. Early in the park's history, for instance, the John Church House was considered of minor interest to the interpretation of the site and

therefore was not investigated as thoroughly as other buildings before it was converted into quarters for the superintendent. The vast majority of the restoration and reconstruction at Hopewell Furnace took place during the Mission 66 period and focused on returning the area to its condition during the period of Hopewell's highest productivity. This approach allowed for a consistent presentation of the village (except for buildings like the Ironmaster's House, which had a longer construction period) and the reconstruction of important buildings such as the Cast House, but it also resulted in the demolition of historic fabric in some of the buildings, such as the Office-Store, that dated to later periods of the furnace's operation. Almost at the same time that the Mission 66 program closed, National Park Service policies toward preservation changed, and previously sanctioned practices such as reconstruction were discouraged. Some actions planned at Hopewell, such as the return of the Ironmaster's House to its appearance during the 1820-1840 period and the reconstruction of the Schoolhouse, were therefore not undertaken.

CHAPTER I: REGIONAL HISTORY PRIOR TO THE ESTABLISHMENT OF HOPEWELL FURNACE

Prehistoric Southeastern Pennsylvania

The final retreat of glaciers from the land that became the United States began approximately 15,000 years ago and left the area now known as Pennsylvania with three large river systems: the Delaware in the east, the Susquehanna in the center section of the state, and the Monongahela and Allegheny in the west. French Creek, which provided water for Hopewell Furnace, flows into the Schuylkill River, a tributary of the Delaware. A consensus has not yet been reached on the date human beings first moved into the area now known as Pennsylvania. Among archeologists, a widely held view contends that nomadic hunters reached the area between 12,000 and 15,000 years ago, during the last glacial retreat. Population was sparse during the Paleo-Indian period (ca. 12,000-8,000 B.C.), according to this view. Small bands of hunters and their families subsisted by hunting big game during this time. The Pleistocene climate of the Paleo-Indian period changed gave way during the succeeding period, the Archaic (ca. 8,000 B.C.-1,000B.C.) to warmer, essentially modern conditions. Archeological surveys conducted in what is now the North Warwick Historic and Archeological District, which includes Hopewell Furnace, indicate that by 3,000 B.C., native peoples inhabited the area in which Hopewell Furnace was built.

As time passed, the native peoples developed what are known to archeologists as "Woodland" cultures. The Early Woodland period (after 1000 B.C.) saw the use of pottery and the establishment of semisedentary population groups somewhat larger than their Archaic counterparts. During the Middle Woodland period, beginning approximately 300 B.C., more sophisticated weapons for hunting and implements for fishing were developed using the native stone found in the area. By 1,000 A.D., during the Late Woodland period, improved farming methods added crops like maize, beans, and squash to the Native Americans' diet of game, fish, and gathered food. The groups of native peoples were larger and more sedentary by the Late Woodland period than they were in the earlier periods, but they still followed seasonal migratory patterns. Labor, generally speaking, was divided by gender, with men engaged in hunting and fishing while women tended the fields.[1]

In addition to more advanced horticulture, the Late Woodland peoples also engaged in trade. Established trading networks brought luxury goods and ritual items to Pennsylvania from as far away as the Rocky Mountains, the upper Great Lakes, and the Carolinas. By approximately 1500 A.D., dozens of local native groups of a few hundred people each occupied the upper and lower Delaware watersheds and spoke variations of the Algonquian language. Those living in the lower

[1] Dennis B. Downey and Francis J. Bremer, *A Guide to the History of Pennsylvania*. (Westport, CN: Greenwood Press, 1993), 8-10; A. Berle Clemensen, *Delaware Water Gap Preliminary Historic Resource Study* (Denver, CO: U.S. Department of the Interior, National Park Service, Denver Service Center, September 1996), 5-6; National Register of Historic Places Registration Form, "North Warwick Historic and Archaeological District," Department of the Interior, National Park Service, Washington, DC, February 24, 1995, 7:0, 8:0.

Delaware region, in which Hopewell Furnace would be built, spoke the Unami dialect and called themselves the Lenni Lenape, meaning "real" or "original" people. In material culture, the Lenni Lenape resembled native cultures to the south, in Maryland and the Carolinas, more closely than they did those of the north. According to their own legends, the Lenni Lenape migrated from west of the Mississippi River and divided into three bands – one being the Unami – after centering their culture in the Delaware valley.[2]

European Settlement and the Displacement of the Lenni Lenape

Regular contact between Europeans and native peoples in the area that became Pennsylvania began in the first half of the seventeenth century. Henry Hudson's voyage into Delaware Bay in 1609 resulted in Dutch claims to the land, and in the mid-1620s the Dutch founded Fort Nassau on the eastern shore of the Delaware River, opposite the future site of Philadelphia. The New Sweden Company established Fort Christina on the site of what is now Wilmington, Delaware, in 1638, and five years later constructed an outpost on Tinicum Island, also near Philadelphia.[3] Indirect European contact with native peoples in the New World may, however, have affected the Lenni Lenape earlier. Diseases like smallpox, measles, and influenza drastically reduced native populations when introduced. Although scholars disagree about the extent of the depopulation before colonization, there is some agreement that the communication of disease from explorers and fur traders to native peoples and then from one group of natives to another did take place – especially in the lower reaches of river valleys like the Delaware, which were close to European points of entry into North America. In the trade between Europeans and native peoples, items manufactured in Europe may have found their way to the Schuylkill valley before the region was seriously colonized. If they reached the area, these items likely came east from Indians along the Susquehanna River, which empties into the Chesapeake Bay. These bodies of water facilitated trade among the Native Americans living along their banks and between the natives and the early English settlers of Maryland and Virginia. The goods traded before colonization, such as glass beads and items of iron, copper, and brass, were converted by the natives from their European uses into religious objects, jewelry, tools, and weapons.[4]

Once their initial outposts had been established, Sweden and the Netherlands each attempted to gain control of the Delaware River valley with the construction of strategically placed fortifications. Three forts, in fact, were constructed on the Schuylkill River, each farther west than the previous one. By 1655, however, the Dutch, under Peter Stuyvesant, who became director of New Netherlands in 1647, had defeated the Swedes. Although the Swedish military and administrative personnel departed from the New World at that time, Swedish colonists did

[2] Downey and Bremer, 10-11; Clemensen, 7.

[3] Robert I. Vexler, ed. *Chronology and Documentary Handbook of the State of Pennsylvania* (Dobbs Ferry, NY: Oceana Publications, 1978), 1; Philip S. Klein and Ari Hoogenboom, *A History of Pennsylvania* (University Park, PA: Pennsylvania State University Press, 1980), 9-11.

[4] Downey and Bremer, 17-20.

not, and Swedes remained an important ethnic group in colonial Pennsylvania. At about the same time that the Dutch overcame Swedish claims in the Delaware Valley, the English reasserted their own.

The civil war in England had interfered with its interests in the New World, which dated from the first decade of the seventeenth century, but Oliver Cromwell turned his attention to English colonial claims in 1650. In 1664, the English captured New Amsterdam (now New York) and gained control of all of New Holland, including the Delaware River valley. The English colonization of Pennsylvania, however, did not begin in earnest until William Penn sought a grant of land west of the Delaware River in 1680. The charter for Pennsylvania – so named by King Charles II in honor of William Penn's father, an admiral in the British navy who was instrumental in the war against the Netherlands – was announced on April 2, 1681. Penn also received a grant from the Duke of York for the Lower Counties, which became Delaware, in 1682.

Penn had been a Quaker missionary for more than a decade before he received his land grant and had witnessed persecution for religious beliefs first hand, having been imprisoned twice for his beliefs. He conceived of Pennsylvania as a colony where religious tolerance and freedom of conscience would be established by law. The sale of portions of the grant helped Penn finance his utopia. The proprietor's *Conditions or Concessions* spelled out the rules for colonization, including instructions for laying out a large town on the Delaware, for purchase of land and settlement of the colony, and for relations with the native peoples. In his document, Penn took pains to prevent speculators from driving up the price of the most desirable land. Companies formed in several English cities, as well as in Wales, the Netherlands, and Germany to organize emigration. The colony grew so quickly that Penn sent three commissioners to help his agent, Captain William Markham, with land sales, and surveyor Thomas Holme began surveys for laying out Philadelphia before Penn's first visit to the colony in October 1682.[5]

During the first 30 years of colonization, most of the immigrants were Quakers, the majority from England, but members of the Society of Friends in Wales and the Netherlands also emigrated. A group of Welsh Quakers purchased 40,000 acres of land west of the Schuylkill River in Chester County, and the vast majority of all the English immigrants settled within 25 miles of Philadelphia. A large number of Quakers emigrated after William III became king of England in 1689 due to the allegiance oath required by the Toleration Act passed the same year; Quakers would not take the oath. England's war with France also impelled the pacifist Quakers to emigrate, as did the dearth of economic opportunity in England. By the end of the seventeenth century, Pennsylvania's population had reached 20,000.[6]

After 1708, immigrants came to Pennsylvania from all over Europe. The Thirty Years War and the War of the Spanish Succession had decimated central Europe by the end of the seventeenth

[5] Klein and Hoogenboom, 11-23.

[6] Klein and Hoogenboom, 39-45; Sally Schwartz, *"A Mixed Multitude": The Struggle for Toleration in Colonial Pennsylvania* (New York: New York University Press, 1987), 36.

century. Coupled with religious intolerance, the poor economic conditions set the stage for emigration that raised the colony's population ten-fold by 1760. German-speaking Mennonites, Dunkers, Amish, Moravians, Lutherans, and members of the German Reformed church came – more than 100,000 by 1750. Entire congregations of Amish, Mennonites, and Dunkers settled in Berks County in the very early years of this wave of immigrants. Another large group of immigrants were the Scotch-Irish, natives of Scotland who had moved to Ulster to further English efforts to colonize northern Ireland. Threats to their church, famine, high rents, and a depression in the wool trade all influenced these people to seek their fortunes in Pennsylvania. They settled first near the German populations, then spread west into Chester, Lancaster, and Berks counties. Between 1717 and 1776, more than 250,000 Scotch-Irish emigrated. By the middle of the eighteenth century, the colony's population was split almost evenly between English, German, and Scotch-Irish ancestries. French Huguenots, persecuted by Louis XIV, also settled in Pennsylvania in the early 1700s, first in Lancaster and Berks counties.[7]

Seventeenth-century European colonists of Pennsylvania sought and ultimately secured trade relations with native tribes. The Lenni Lenape received European manufactured goods in return for furs and foodstuffs. The manufactured goods in some cases replaced similar native-made items – brass pots for clay ones, for instance – and some native crafts declined as a result. Native tribes became more productive in other crafts as they learned to incorporate European materials. This was especially true for the production of weapons, which quickly made use of European metal. During the late seventeenth century, the native peoples of Pennsylvania became more dependent on trade with Europeans for everyday necessities. As the Iroquois to the north and the Susquehannocks to the west gained control of the prime sources of furs, pelts, and hides in the tribal wars of this period, the Lenni Lenape turned to agriculture to raise foodstuffs to be used in this trade economy. Continued relations with Europeans facilitated the introduction of devastating diseases.[8]

As more and more immigrants poured into Pennsylvania, the fur trade with the native peoples declined in importance, and land for farming and housing became a more important commodity. Penn's *Conditions or Concessions* had codified rules for dealing fairly with the Indians, but when the founder returned to England for good in 1701, and especially after his death in 1718, those rules were often suspended. Under the direction of James Logan, Penn's personal agent and commissioner of property for 50 years, land transactions with the Lenni Lenape were often unscrupulous and sometimes fraudulent. By the middle of the eighteenth century, nearly all Native American peoples had been driven out of the lower Delaware and Susquehanna watersheds, moving westward to the Allegheny, Monongahela, and Ohio river valleys.[9]

---

[7] Klein and Hoogenboom, 42-45.

[8] Downey and Bremer, 25-31.

[9] Ibid., 34-38.

Berks and Chester Counties

Chester County, named after Cheshire in England, was one of the three counties designated in Charles II's initial land grant to William Penn. The county was initially bounded by the Delaware River on the east, the Schuylkill River on the north, the Susquehanna River on the west, and the disputed border with Maryland on the south. The county seat was Upland, now Chester, which was the site of William Markham's announcement to the Swedish settlers of William Penn's charter in 1681. The 40,000-acre Welsh Tract, where many Quaker immigrants from Wales settled, lay in the western portion of the county, while the English remained on the east near the Delaware River. Scotch-Irish immigrants settled in the northernmost and southernmost sections of the county. Warwick Township, in which part of the Hopewell Furnace National Historic Site stands, was not created until 1842.[10] Chester was divided into two counties in 1789 as a result of complaints by citizens about the distances they were forced to travel to vote and pay taxes at the county seat. The new county, carved from Chester's eastern section, which included the county seat, became Delaware County. Chester's new county seat was moved to West Chester.[11]

In the seventeenth century as today, Chester County's topography resembled other areas of the Piedmont, i.e., that section of the eastern seaboard of the United States between the Atlantic Coastal Plain and the Blue Ridge Mountains. The land rolled in gentle hills, flattening as it moved east. Elevations ranged from 1,056 feet above sea level in the Welsh Mountains at the sources of French and Brandywine creeks to 80 feet at Valley Forge on the Schuylkill River. The vast majority of the county's bedrock consisted of metamorphic and igneous rocks such as schist, quartzite, slate, marble, granite, and serpentinite. The varying resistance of these rocks to weathering created the landscape of low ridges and narrow valleys. Limestone could be found in a narrow band in the middle of the county. A much smaller area in the northern section of the county, composing about 10 to 15 percent of its area, contained red sandstones and shales, the topsoil of which reflects their red color. The countryside was drained by the Schuylkill River and a number of streams, of which French Creek was one.[12]

As the population spread into the interior of Pennsylvania, residents of Philadelphia, Chester, and Lancaster counties also complained about the distance of their respective county seats from their homes, resulting in the creation of Berks County in 1752 from portions of those three counties.

---

[10] Thomas A. Pitt, *History and Progress of Chester County* (West Chester, PA: Commissioners of Chester County, 1962), 11, 39; Henry Pleasants, Jr., "Chester County," in *Southeastern Pennsylvania, a History of the Counties of Berks, Bucks, Chester, Delaware, Montgomery, Philadelphia, and Schuylkill*, Nolan J. Bennett, ed., 3 vols. (Philadelphia: Lewis Historical Publishing Company, 1943), 197-199.

[11] Henry Graham Ashmead, *History of Delaware County, Pennsylvania*, Philadelphia: L.H. Everts & Co., 1884, 81. Reproduced on the Delaware County History website, http://www.delcohistory.org/ ashmead/ashmead/htm.

[12] *Landscapes, the Chester County Comprehensive Plan*, Chester County Government website, http://www.chesco.org/planning/LandPlan/natres.html, 1-4.

The county was named after Berkshire in England, the home of the Penn family. Petitions for the creation of a new county began as early as 1739; other petitions followed in 1745, 1750, and 1751.[13] As established in 1752, the county's original boundaries spread west beyond the Blue Ridge Mountains. Berks County was reduced in size in 1772 by the creation of Northumberland County and again in 1811 by the creation of Schuylkill County. The Berks County seat was Reading, and the county numbered 23 townships, including Union, in which the majority of Hopewell Furnace National Historic Site stands. As with the other areas of eastern Pennsylvania, Berks County's population was composed of immigrants from many parts of Europe. Swedish immigrants settled at Molatten, north of the mouth of Manatawney Creek near what is now Douglassville, in 1701. German farmers began to settle along the creek in 1708. Welsh, English, Swedes, and French Huguenots moved into the Oley Valley in the first quarter of the eighteenth century, while immigrants from the Palatine area of Germany settled in the western part of the county, coming to Philadelphia by way of New York. Other German-speaking settlers moved to Berks County after first moving to Rotterdam from their native land.[14]

Berks County shares many of the same physical characteristics with Chester County, such as its rolling Piedmont topography and drainage by many streams, including the Schuylkill River and French Creek. Closer to the Blue Ridge, the elevations of Berks County are slightly higher than those of Chester County. The South Mountain ridge rises 1,200 feet above sea level in the north and west of the county, while the lowlands of the Great Valley lie at 200 to 500 feet. Limestone, shale, sandstone, quartzite are among the most plentiful minerals. In Union Township, where Hopewell Furnace is located, sandstone, shale, and quartzite predominate, as they do in Warwick Township in adjacent Chester County.[15]

The desire for fertile farmland drew settlers westward from Philadelphia into Berks and Chester counties, and some of this land was farmed as early as the 1720s. Each ethnic group brought their traditional farming methods to the New World, but those of the German immigrants were especially suited to eastern Pennsylvania – the topography, climate, and soil of which was much like the lands they had farmed in Europe. English and Scotch-Irish farmers, on the other hand, farmed their lands until they were depleted and then moved on. Due to the difficulty of clearing fields of virgin forest and rocks, farmers often pooled their resources to accomplish this task. Frontier Pennsylvania farms were not likely, therefore, to be isolated subsistence outposts, but village-oriented commercial enterprises. The farmsteads consisted of a log cabin as residence, a smokehouse in which to cure meat, a springhouse for water and to store milk and butter, and a

[13] Nolan J. Bennett, "Berks County," in *Southeastern Pennsylvania*, 50-51; Kathy M. Scogna, "The Birth of a County – 1752," *Historical Review of Berks County*, http://www.berksweb.com/histsoc/ articles/ berks1752.html, 3-5.

[14] Bennett, 41-51; Lewis M. Waddell, "Berks County: Diamond of the Schuylkill Valley," *Pennsylvania Heritage* 17:4 (1991), 5-7.

[15] *Berks Vision 2020: A Comprehensive Plan for the County*, Berks County Government website, http://www.co.berks.pa.us/planning/cwp/view, I-1-I-2, figure I-3.

barn in which to store crops and house animals. Wheat, corn, rye, oats, and barley were the most frequently produced cereals, and European farmers also grew those crops that had grown well for the Lenni Lenape – beans, squash, and melons. Fruits such as peaches, apples, cherries, pears, and plums were also grown; these were used to make cider or brandy, dried for domestic use, or fed to pigs.[16]

Early Pennsylvania Iron Industry

The search for mineral wealth in the Schuylkill Valley dates back to William Penn's tenure in the colony. Pennsylvania was not unusual in this regard. Raw materials that might be sold in England constituted an important attraction to early speculators and explorers. Iron ore – much of it occurring in outcroppings that could be easily dug without special experience – was found in western Connecticut, Massachusetts, New Jersey, the Adirondack region of New York, and Virginia.[17] The earliest attempt at iron-making in the American colonies took place during the first quarter of the seventeenth century in Virginia.[18]

Two methods of iron-making were employed in the American colonies: bloomery forges and cold-blast furnaces. In bloomery forges, iron ore was heated in a fire using charcoal for fuel. The ore did not melt but became soft and pliable. Repeated hammering and heating removed impurities from the metal, which could be further hammered and shaped into tools and implements. This process was already 3,000 years old by the time Europeans ventured into North and South America. Bloomeries produced small amounts of iron – enough for blacksmiths to forge into implements and tools necessary for farming.

Cold blast iron-making technology allowed for the production of greater quantities of iron. (Figure 2) It was developed in the centuries before the North American continent was colonized by Europeans. In cold blast technology, iron ore was mixed with flux to reduce impurities in a stone furnace. At Hopewell and many other furnaces, the flux was limestone. At Saugus in Massachusetts, gabbro was used as a flux, and in some tidewater Virginia furnaces oyster shells were used. The truncated pyramids of the furnaces stood 25 to 35 feet high. Their heat was intensified through the introduction of a blast of air from a bellows that melted the iron. The molten iron could be formed into bars, known as pigs, that were further worked in a refinery forge ("finery") into bar iron like that created in bloomeries. The products created by blacksmiths from bloomeries and from the bar iron of blast furnaces were said to be made of wrought iron.

---

[16] "North Warwick Historic and Archaeological District," 8:8; Klein and Hoogenboom, 191-194; Lewis and Hugins, 8.

[17] Robert B. Gordon and Patrick M. Malone, *The Texture of Industry, An Archaeological View of the Industrialization of North America* (New York: Oxford University Press, 1994), 63.

[18] Lewis and Hugins, 7; Robert Gordon, *American Iron, 1607-1900* (Baltimore: Johns Hopkins University Press, 1996), 55. Lewis and Hugins date the earliest attempt at colonial iron-making to 1622, Gordon to 1610. Hopewell Furnace Chief Ranger Jeffrey Collins pointed out Gordon's book in relation to early American iron-making.

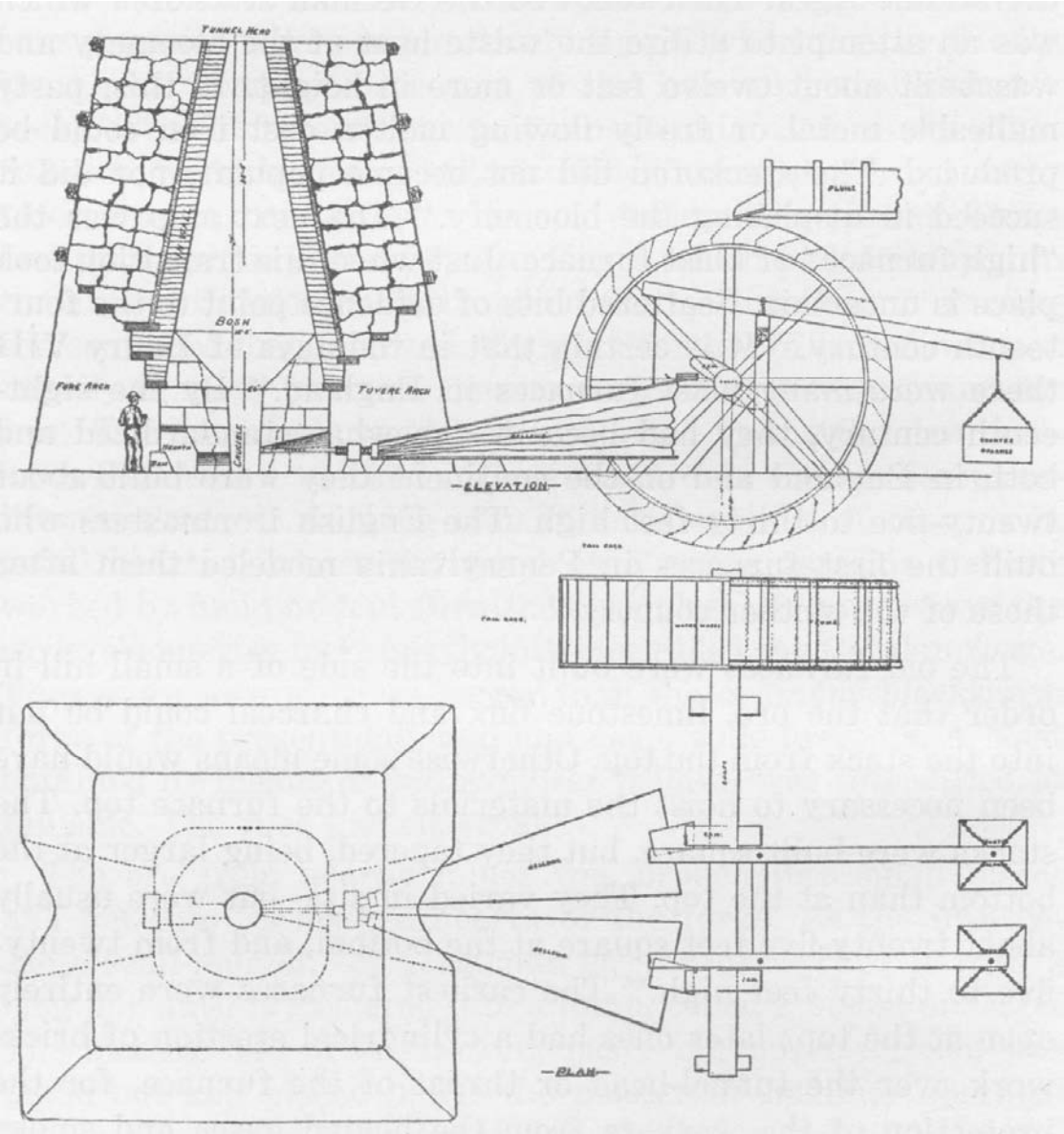

Figure 2 – A typical cold-blast furnace. (Arthur Cecil Bining, *Pennsylvania Iron Manufacture in the Eighteenth Century*, Harrisburg, Pa.: Publications of the Pennsylvania Historical Commission, 1938, 78.)

But the molten iron could also be cast directly into moulds, creating items such as pots, kettles, and stove plates. A blast furnace and finery were built on the Saugus River in Massachusetts in the 1640s, but the enterprise went bankrupt by 1670. These iron-making resources have been reconstructed as the Saugus Iron Works National Historic Site.

In the eighteenth century, blast furnace technology created profitable ironworks all along the eastern seaboard from Virginia and Maryland north to New England. The expansion of the iron-making industry in the English colonies in the eighteenth century made the infant industry a competitor with that of the mother country, at least in the colonies themselves. As a result, Parliament in 1750 prohibited the construction of colonial ironworks capable of making iron plates, nail rod, or steel. Ironmasters in North America, however, largely ignored the law, and by the time of the American Revolution, the colonies were producing one-seventh of the world's pig and wrought iron, as well as castings.[19] Moreover, the complexity of iron-making operations presaged later American industrial development. "In an era of small farms, wooden implements, and workbench manufacturing," write historians Philip S. Klein and Ari Hoogenboom, "the ironmaster forged the guidelines for the factory system of the future: massive capital investment; detailed cost accounting; development of far-off markets; division of labor by precise job definition; invention and crafting of machinery; standardization of product; personnel management of a complex order."[20]

European settlers discovered copper, iron ore, and limestone in Berks and Chester counties by the early eighteenth century. In 1717, Samuel Nutt surveyed 250 acres in Warwick Township, Chester County, which included an iron mine.[21] The bloomery Nutt eventually constructed grew into the Coventry Iron Works. Thomas Rutter built a bloomery on Manatawny Creek in Berks County in 1718 to begin the iron industry in Pennsylvania, and in 1720 he constructed a blast furnace at Coalbrookdale. By the time the American Revolution began, the Schuylkill River Valley was the center of the North American iron industry. All told, 21 blast furnaces, 45 forges, and 4 bloomeries were built in Pennsylvania between Rutter's first complex and the beginning of the American Revolution.[22]

---

[19] Lewis and Hugins, 6-11.

[20] Klein and Hoogenboom, 212.

[21] Pleasants, 263.

[22] Klein and Hoogenboom, 212-213. Lewis and Hugins (8) date Rutter's bloomery to 1716.

CHAPTER II: CONSTRUCTION, GROWTH, AND DECLINE OF THE FURNACE, 1771-1883

Establishment by Mark Bird

Mark Bird, a second-generation iron-maker, established Hopewell Furnace around 1771. His father William worked at a number of forges, then began his own business, constructing Hopewell Forge in what is now Birdsboro on the Schuylkill River. By the time of his death in 1761, William Bird owned two forges and a furnace and more than 3,000 acres of land valued at £13,000. Mark Bird, about 30 years old at the time of his father's death, assumed responsibility for the iron-making operations, inherited the land, and began expanding the business. He purchased an interest in a Lancaster County furnace and bought more property in Berks and Chester counties, owning more than 8,000 acres by 1763.[23] Already one of the largest landowners in Berks County, Bird then began acquiring smaller tracts of land that fulfilled the requirements for a new iron plantation. On March 25, 1769, he acquired 33 acres of meadowland along French Creek as it ran between two low hills, along with the buildings on the property, from a 106-acre tract owned by Owen Hugh. On the same day, he acquired 97 ¼ acres from Edward Hugh adjoining the 33-acre tract. By 1772, Bird acquired the rest of Owen Hugh's 106 acres.[24] Bird also received rights to 157 acres in Chester County, where he developed the Old Hopewell Mines, on August 23, 1770. He recorded a deed for the 40 acres of the Jones Good Luck Mine in 1774.

These lands provided most of the raw materials and natural resources Bird needed to begin his new iron-making operation. The woodlands that formed the majority of Bird's inheritance provided charcoal to fuel the furnace, while other lands provided ore and limestone. On the 33-acre tract purchased from Owen Hugh, the ironmaster's house was built, and Bird constructed the furnace on the property formerly belonging to Edward Hugh. One of the hills on this land supported the charging bridge, a structure built to reach the top of the furnace stack where ore, flux, and fuel were loaded. Eventually, although not when the furnace first opened, French Creek itself powered the blast machinery.

The dates of Mark Bird's land acquisition near French Creek and other financial dealings around the same time suggest a start-up date for the furnace of about 1771. There are no extant furnace records from that time, but this date is supported by other evidence. For instance, Mark Bird's property tax in Berks County jumped in both 1768 and 1770, perhaps indicating an increase in its valuation based on improvements. A witness testifying in an 1811 lawsuit stated that he had cut wood on property adjacent to the furnace in 1770 and thought that the furnace itself had been

[23] Lewis and Hugins, 28-29.

[24] Charlotte Fairbairn, "Hopewell Village Lands Traced Back to the Penns," *Historical Review of Berks County* 19:1 (1963), 139-140. Owen Hugh purchased 106 acres from Griffeth Pierce on May 24, 1762. Hugh's land formed a portion of 234 acres Pierce had acquired in a public sale on May 12, 1762. The 234 acres had been auctioned to satisfy the debts of James Keimer, who received a patent on the land from the Penns on December 10, 1742, mortgaged it on December 11, 1745, and subsequently defaulted.

erected a year or two earlier. Further, when Hopewell Furnace was advertised for sale in 1787, the property description noted that it had been operating for 17 years. Evidence for 1771 as the date in which iron-making began at Hopewell include a stone still in the furnace's cast arch, into which that date was carved. The oldest known stove from the furnace bears the legend "Mark Bird Hopewell Furnace 1772." Based on all this evidence, Joseph E. Walker, in *Hopewell Village: The Dynamics of a Nineteenth Century Iron-Making Community*, places the date of construction of the furnace at 1771. To secure the capital needed to begin the Hopewell venture, Bird seems to have approached his family. He transferred Berkshire Furnace to his mother and her new husband John Patten in 1774 and may have been reimbursed for that transfer. In 1772, he gave mortgages to his sister and two brothers for their shares in William Bird's estate.[25]

A final necessity for creating and running a successful iron operation, after raw materials, fuel, and land were secured, was labor. As southeastern Pennsylvania had been the center of the colony's iron industry for nearly 50 years before Hopewell Furnace was erected, the skilled workers needed for its operation – masons, carpenters, and plasterers for construction; wood cutters and colliers to provide fuel and building material; miners to dig limestone and iron ore; experienced furnace workers, such as founders, keepers, fillers, and guttermen; carters and teamsters to transport raw materials and finished goods; artisans such as blacksmiths, wheelwrights, and coopers; specialized laborers like bakers, weavers, tailors, and millers; and general laborers for a variety of tasks – could be found nearby, but the supply was inadequate to meet the demand when the iron industry was prosperous. Since records for Hopewell Furnace do not exist for the furnace's early blasts, it is impossible to say precisely where its initial work force came from, but Walker postulates that Mark Bird recruited from other ironworks, mines, and charcoal-making operations in the area. The work force would therefore have been made up of the same English, Welsh, German, Swede, and French Huguenot stock that had settled in the area.[26] Bird also held 18 enslaved workers when Pennsylvania passed its emancipation act in 1780, making him the largest slaveholder in Berks County. Some of Bird's slaves toiled at his Birdsboro forges, and tradition holds that enslaved laborers dug the furnace's East Head Race. The use of slave labor in the iron industry was not unusual; travelers reported that enslaved African Americans did much of the work at Maryland's ironworks and that they were known to have worked at furnace jobs in southeastern Pennsylvania in the 1750s.[27]

---

[25] Joseph E. Walker, *Hopewell Village: The Dynamics of a Nineteenth Century Iron-Making Community* (Philadelphia: University of Pennsylvania Press, 1974), 19-23. Although Berks County historian Morton L. Montgomery states that William Bird was responsible for starting Hopewell Furnace in 1759, an inventory of the elder ironmaker's estate does not mention the operation – unlikely for such a valuable property. Walker also points out that elsewhere in his history of the county, Montgomery gives 1765 as the date that Hopewell began operations – four years after William Bird's death.

[26] Ibid., 272-275.

[27] Walker, 304-305; "African-Americans at Hopewell Furnace," contained in David Jenkins, "Hopewell Furnace National Historic Site, Ethnographic Resource Inventory Report," 2002, Hopewell Furnace National Historic Site, appendix 3.

Initially, Hopewell was a "cold blast" furnace, meaning that unheated air pumped into the furnace raised the temperature high enough to separate iron from the ore. It remained a cold blast furnace for most of its 112 years of operation. When Hopewell Furnace began producing iron for Mark Bird in the early 1770s, therefore, several aspects of the village as it exists were probably already in place – although some of these structures have been much altered in the intervening 230 years. In the furnace complex, the 30-foot-high, truncated stone pyramid of the stack itself had been constructed for the initial blasts in the eighteenth century, and races were dug to convey water to and from the water wheel. The East Head Race and the Bank against which the stack was raised were extant at this time.[28] Other structures, such as a charging bridge and bridge house, a cast house and associated sheds, and a charcoal house likely were clustered around the furnace stack in an arrangement similar in organization if not in detail to the park's current reconstructed furnace complex.

A variety of structures were needed chiefly to protect the furnace's components, its workers, and raw materials from the weather. Their precise construction dates and forms are uncertain, but some information has been uncovered. For instance, the furnace's original water wheel – an overshot wheel 30 feet in diameter – ran north to south and stood west of and parallel to the charging bridge. Archeological studies of the walls remaining under the charging bridge indicate that the earliest bridge was narrower than the current one. Like many charcoal-fueled iron furnaces in the eighteenth century, Hopewell Furnace's initial blast machinery consisted of wood and leather double bellows. This machinery would have to be protected from the weather by some kind of structure, such as the current Wheel House. However, since the initial water wheel ran north to south, while the later wheel runs east and west, the form of this structure would likely be somewhat different than the later Wheel House. A bridge house of some kind was also required to protect the furnace head from the elements while raw materials were being loaded into the furnace – probably narrower than the later Bridge House since the bridge itself was narrower. The connecting shed, an extension of the bridge house to the charcoal house, and the charcoal house itself, would have protected that fuel. Once again, the forms and materials of all these buildings are uncertain due to later construction and reconstruction.[29] A short road and turnaround existed between the charcoal house and bridge house to facilitate the transportation of

[28] Charlotte Judd Fairbairn, "Historic Structures Report, Part I, East Headrace, Historical Data Section," December 1966, Hopewell Furnace National Historic Site, 1. Extant buildings, structures, or remains, such as the East Head Race, are capitalized in the text; no longer extant structures or structures replaced by later buildings are lower-cased.

[29] Walter Hugins, "The Physical History of the Furnace Group, 1770-1883," Hopewell Furnace National Historic Site, 1954, 4-15, 29-31; Robert D. Ronsheim, "Survey Report (Historical Data) Restoration of the Charcoal House and Shed (Bldg. 9)," Hopewell Furnace National Historic Site, November 9, 1957; Earl J. Heydinger, "Historic Structures Report, Historical Data Section, Part I, Charcoal House," Hopewell Furnace National Historic Site, June 5, 1964, 1-2; Russell A. Apple, "Historical Documentary Report on the Bridge and Wheel Houses, Hopewell Furnace," September 28, 1956, Hopewell Furnace National Historic Site, 1-5.

fuel to the furnace stack.[30] Charcoal hearths, colliers' huts, and charcoal roads would also have existed in the forests surrounding the furnace complex; some of these may have existed in the same locations throughout the furnace's operating history.[31]

Transportation of ore, fuel, and finished products required draft animals and a structure in which to house and feed them. When Hopewell Furnace began its operations around 1771, draft animals may have been housed in the first stage of the stone barn as it has been reconstructed today. Research indicates that this first stage was approximately 68 by 28 feet and built of stone in the bank barn configuration. Animals were stabled on the first floor, and hay was stored above. The hillside into which the barn was built allowed for separate entrances to the two floors. Stalls faced south, while the entrance to the hay mows faced north.[32] A separate stable may have been in existence to house mules used in transportation.[33] Also serving the furnace operation was a blacksmith shop to make locks, nails, tools, and farm implements. Whether or not the first blacksmith shop stood on the site of the current shop is unknown.[34]

---

[30] Hopewell Furnace, List of Classified Structures website, maintained by the National Park Service, http://www.hscl.cr.nps.gov/reports.

[31] Edward F. Heite, "Report of Archaeological Surveys in Two Tracts at Hopewell Furnace National Historic Site, Berks and Chester Counties, Pennsylvania," May 1988, Hopewell Furnace National Historic Site, 11-12.

[32] Joseph Prentice, Robert D. Ronsheim, and Norman M. Souder, "Historic Structures Report, Part I, Architectural Data Section, Preliminary to the Restoration of the Village Barn (Building no. 2), Historical Data Section, 1959, Hopewell Furnace National Historic Site, 1-8; Norman M. Souder, "Historic Structures Report, Part II, Architectural Data Section, Prepared for the Restoration of the Village Barn," 1959, Hopewell Furnace National Historic Site, 3. The present two-story barn, approximately 101 by 28 feet, incorporates the stone walls of the earliest two stages of the village barn. The section of the barn built first measured approximately 68 by 28 feet, the second approximately 33 by 28. Russell A. Apple dated the oldest part of the barn to 1817, the next to 1829-42. The first date has been disproven, and the second date rests on faulty information, according to the Historic Structures Report. No definitive dates for the two earliest sections of the barn have been ascertained, although Souder assigns the first phase to the midpoint of Pennsylvania German barn construction, i.e., approximately 1775.

[33] Hopewell Furnace, List of Classified Structures website. The LCS states that the mule stable, of which only ruins remain (south of the barn), was constructed between 1771 and 1780. The basis for this date is not clarified by other documentary evidence, such as Apple's "Documentation for the Historic Base Maps" (1956), Heydinger's "Revision of the Documentation for the Historical Base Maps, 1830-1840," the National Register of Historic Places documentation (1985), and the "Cultural Landscape Report" by KFS Cultural Resources Group (December 1997, Hopewell Furnace National Historic Site,). A two-story frame stable 60 feet south of the village barn was covered by an Insurance Company of North America policy that also covered the barn. That policy, a copy of which is included in building files in the Hopewell Furnace archives, is dated February 19, 1879.

[34] Hopewell Furnace, List of Classified Structures website. Since the foundations of the Blacksmith Shop rest on slag produced during the operation of the furnace, the Blacksmith Shop as it exists today probably was constructed after the furnace became productive – perhaps very soon after. Please see John Albright and Norman M. Souder, *Historic Structure Report: The Blacksmith Shop and Wheelwright-*

It is likely that the building now known as the Office-Store began serving those functions shortly after the furnace began operations. The stone building was constructed against the side of the same hill into which the furnace was built. The furnace's business transactions were recorded here, and the building also acted as the company story for furnace employees. In this early period, the Office-Store stood one and a half stories tall with a basement exposed on the south side. A corner fireplace, unusual in Hopewell buildings, heated the Office-Store.[35]

Also included among the original components of the village were several roads, including the east-west public road between Reading and Coventry Forge in Chester County, dating from 1757; the private road Bird constructed to connect Hopewell Furnace to the Reading-Coventry Forge road; the private north-south road between Birdsboro and Warwick, and a 1772 road built to reach the Jones Good Luck Mine. Cart and walking trails are also likely to have existed, leading through the forests between wood lots and charcoal hearths and the furnace. None of these roads were paved.[36]

Hopewell Furnace and the American Revolution

As the 13 British colonies prepared for war against England early in 1776, the Continental Congress appointed a five-member Committee for Procuring of Cannon to determine the number of cannon needed for the war and how those cannon might be acquired. Furnaces and forges in Pennsylvania, Massachusetts, Connecticut, New York, New Jersey, Virginia, North Carolina, and South Carolina are documented to have furnished cannon, guns, shot, shell, and other necessary products for the Continental Army and Navy. Historians have emphasized the importance of the furnaces and forges in southeastern Pennsylvania in the Revolution due to the dominant position they held in American manufacturing at the time and their proximity to colonial forces. In the years just prior to the Revolution, Pennsylvania supplied 40 percent of the iron exported from the nine colonies that produced iron. Durham, Reading, Cornwall, Mary Ann, Oley, and Warwick furnaces, along with Hopewell, were all important locations of ordnance manufacture.[37]

Carpenter Shop and Historic Furnishing Study: The Blacksmith Shop, Wheelwright-Carpenter Shop, and Charcoal House, Historical and Architectural Data (Denver, CO: U.S. Department of the Interior, National Park Service, Denver Service Center, August 1974), 15-18.

[35] Charlotte Fairbairn, "Historic Structures Report, Historical Data, Part III, Office-Store – Building #3," January 27, 1964, Hopewell Furnace National Historic Site, 1-4; Robert Ronsheim, Earl J. Heydinger, and Norman M. Souder, "Historic Structures Report, Part II, Administrative, Architectural, Historical & Furnishing Data Section, the Office and Store Building," 1960, Hopewell Furnace National Historic Site, 1-6.

[36] KFS Cultural Resources Group, "Cultural Landscape Report," 89.

[37] Robert Keith Fleck, "The Impact of Southeastern Pennsylvania Forges and Furnaces' Ordnance Production upon the American War Effort, 1775-1783," master's thesis, Kutztown State College, May 1983, 1-4.

Pennsylvania ironmasters were also active in the Revolution in other ways. Joseph Galloway, the first owner of Durham Furnace, for example, was a member of the First Continental Congress, and four ironmasters signed the Declaration of Independence. Many more were members of the various committees formed to promote and then fight for American independence. Others served in the Continental Army.[38]

Early in the war, while the fighting was concentrated in New York and Boston, Pennsylvania furnaces and forges produced ordnance unimpeded by the conflict. Many of the cannon produced during the early period were scheduled for use by the American navy as it tried to prevent the advance of the British fleet up the Delaware River to Philadelphia. Production decreased in 1777 when British forces shifted the theater of war to Pennsylvania. After George Washington's troops suffered defeats at Brandywine and at Germantown, Philadelphia was occupied, seriously hindering Pennsylvania iron furnaces' attempts to produce ordnance. As the conflict shifted to the southern colonies after 1778, Pennsylvania furnaces went back into ordnance production; documents indicate that production centered on shot and shell rather than cannon.

Over the course of the war, Pennsylvania ironworks produced 28 different shot and shell types, 10 different field guns, and numerous other types of ordnance. This variety of production has been cited as evidence of its importance to the colonial cause. The total number of cannon produced does not appear to be great; however, the small scale of the war meant that overwhelming numbers were not necessarily important. When General Sir William Howe arrived in New York in July 1776, he brought 20,000 troops, but only 40 cannon. General Henry Knox, Washington's chief of artillery, estimated that an army of 40,000 men would need 30 18-pound cannon and 30 12-pound cannon. In view of these numbers, the cannon produced in Pennsylvania during the early years of the war take on obvious significance. The Continental Congress contracted with Pennsylvania ironworks to cast 40 18-pound cannon, and the state produced 24 12-pounders in 1777 alone. Scholars have not thus far sought to quantify and compare ordnance production among the different states, making a precise evaluation of the contribution of southeastern Pennsylvania's ironworks to the war effort difficult. However, the contracts and production do show that the national government felt Pennsylvania's iron industry capable of providing a large portion of the ordnance it needed to gain independence.[39]

Hopewell Furnace was one of the ironworks in which Congress put its faith. In May 1776, Robert Treat Paine, chairman of the Committee for Procuring of Cannon, received a letter from Mark Bird requesting the deployment of equipment and personnel in Philadelphia so that he could deliver cannon and shot to the committee. In August 1776, the Congress advanced him $2,000 on the cannon contract, and he was also issued powder with which to prove the guns. From these and other documents, historian Charles E. Funnell concluded that Hopewell Furnace provided cannon, shot, and shell for the Continental Navy during the American Revolution. The cannon were likely founded in 1776 and later used on two American frigates, the *Delaware* and the

[38] Ibid., 22-25.

[39] Ibid., 33-50.

Randolph.[40] The government also contracted with Bird to produce guns for the frigates *Congress* and *Montgomery*. Captain Daniel Joy, charged by Congress with proving the Continental Navy's cannon, wrote to the council in the spring of 1776 that "Mr. Bird's Metal appears much the best" of those he had tested.[41] He later recalled that he proved 150 cannon (of the nearly 200 tested) at Hopewell Furnace that spring.[42] So important was the production of armaments by Hopewell and Bird's other iron-making operations that the Continental Congress recommended that 11 men employed by Bird be discharged to return to their work as "artificers."[43] The number of cannon Joy recalled proving seems high, given the numbers previously established as being needed, and certainly not all the cannon proved at Hopewell were cast there. However, his appraisal of Bird's metal and the use of the furnace as a proving ground suggest the ironworks' importance to ordnance production during the early stages of the conflict.

Bird's contributions to the Revolution went beyond contracts to produce ordnance. He also served on the Committee on Observation and the Committee of Correspondence. He served as a member of the Pennsylvania Assembly, was chairman of the Committee of Berks County that selected eight members (including Bird) to serve in the Provincial Conference of 1776. All these groups were active in the movement for independence from Britain. Bird was also a lieutenant colonel in the Second Battalion of the Berks County Militia – later a colonel – and provided uniforms, tents, and provisions for 300 men at his own expense. As colonel he led his militia to relieve the Continental Army after its defeat at the Battle of Brandywine in September 1777. Perhaps more significantly, Bird served as deputy quartermaster general of the Continental Army. In that post, he sent 1,000 barrels of flour to Washington's army at Valley Forge in February 1778, taking advantage of high water on the Schuylkill River to float the supplies downstream. Hopewell historian Earl Heydinger claims that the four or five days that the flour would have lasted enabled Washington's troops to survive the winter.[44]

Bird's Debts and the Loss of Hopewell Furnace

By the end of the war, the new United States owed Bird money for his services, and like many other creditors of the government, the ironmaster had difficulty gaining compensation. Congress authorized payment of $125,000 to Bird in 1780, but no record has been discovered that payment

[40] Charles E. Funnell, "The Elusive Ordnance of Colonel Bird" (Philadelphia: U.S. Department of the Interior, National Park Service, Mid-Atlantic Region, March 1976), Cultural Resource Bibliography [CRBIB] Files, NERO-P, 1-9, 83. Funnell wrote his report in response to a fall 1975 report by John Luzader of the National Park Service which concluded that, although Bird did produce cannon for the Revolution, those cannon were not manufactured at Hopewell Furnace.

[41] Fleck, 33.

[42] Ibid.,50.

[43] Walker, 25.

[44] Walker, 24-28; Lewis and Hugins, 31-32.

was in fact made. Bird requested that as payment he be given the chain forged to stretch across the Hudson River, thereby obstructing British warships trying to reach West Point, but Congress denied the request. Bird's financial problems were not limited to unpaid contracts with the government after the war. He invested in the trading ship *United States*, one of the first ships leaving the new nation to trade with China, but the ship and its cargo were seized on its return to Philadelphia to pay off the debts of some of its owners. Bird owned or had interest in a wide range of businesses: He was a partner in Gibraltar and Spring forges in Berks County and the Delaware Falls Iron Works near Trenton, New Jersey, in addition to ownership of Hopewell Furnace and Birdsboro Forge. When the economy declined after the war, however, he closed his iron-making operations in Berks County and appealed for tax relief. Hopewell Furnace and Birdsboro Forge were also damaged by fire and floods. Bird and his partner James Wilson mortgaged the Hopewell, Birdsboro, and Delaware Falls properties to raise money, and tried to sell Hopewell Furnace, along with 4,000 acres of land, 5,000 cords of wood, and 800 loads of ore, but the property was not sold. Bird also put the Birdsboro and Spring forges up for sale. Bird and Wilson tried to borrow 500,000 florins in Holland but were refused, perhaps because they had already overextended their credit. One of Bird's creditors, John Nixon, who held the mortgage to the Hopewell and Birdsboro land, sued Bird and Wilson in 1788, resulting in the auction of the Hopewell property. James Old purchased two-thirds interest in the property, Cadwallader Morris one-third, in the April 1788 auction of "Hopewell plantation," which then consisted of 5,163 acres.

Bird left Pennsylvania for North Carolina after the sale. He returned to Berks County briefly in 1796, but was soon back in North Carolina. He wrote Dr. Benjamin Rush in Philadelphia, hoping the doctor would solicit funds for his relief, but Rush declined. Bird died in 1816 near Bostic, in western North Carolina, blaming "the Vile and unnatural war" and the "Depretiation" in the economy after independence for his financial ruin.[45]

Old and Morris purchased the Hopewell property – the second largest of the 14 furnaces in Pennsylvania in 1789 – as the American iron industry entered a period of prosperity, but frequent changes in ownership suggest that the pair may not have enjoyed the success of other iron-making operations. Cadwallader Morris sold his share in the furnace in 1790 to his brother Benjamin, who then purchased James Old's share. In 1793, Old bought the furnace back from Benjamin Morris, then sold it to James Wilson, Bird's former partner. Wilson also purchased Birdsboro Forge in 1793, indicating that he intended Hopewell to supply pig iron to his forges there. Wilson did not plan to run the iron-making operations himself, instead renting Hopewell Furnace, Birdsboro Forge, and Gibraltar Forge to John Lewis Barde of Berks County, John Rene Barde of Philadelphia, and Paul Henry Mallet Prevost of New Jersey. Wilson, however, apparently suffered financial setbacks – exacerbated, no doubt, by flood damage to Hopewell properties in 1795. He sold the Birdsboro and Gibraltar forges, along with 2,200 acres of land, to John Lewis Barde in 1796. Later that same year, Hopewell Furnace and 4,000 acres of land were seized and sold to pay Wilson's creditors. Like Bird, Wilson moved to North Carolina; he died in Edenton in 1798. James Old purchased Hopewell Furnace for the third time in the sheriff's sale

[45] Walker 28-34; Lewis and Hugins, 32-33.

resulting from Wilson's financial problems, and the furnace was run by John Bishop and Mathew Brooke. When the sheriff advertised the property for sale again, in 1800, the furnace and its lands were purchased by Benjamin Morris. Later that year, Morris sold Hopewell Furnace and its lands to Daniel Buckley of Lancaster County, Thomas Brooke of Montgomery County, and Mathew Brooke, Jr., of Berks County. The Brookes were Buckley's brothers-in-law. Buckley and the Brookes and their descendants retained ownership of Hopewell Furnace from that time until it was sold to the federal government in 1935. For 10,000 pounds, Buckley and the Brookes had purchased 5,360 acres of land on seven different tracts, as well as the houses, outbuildings, mines and quarries, water rights, and woods that existed on them. An orchard also existed on the property at the time, dating back to at least 1788. They also acquired movable property, including iron ore, limestone, wood, sandstone, and sand; stoves, furnace tools, and bellows; furniture; draft animals, cows, hogs, and hay; wagons and barrows.[46]

The Struggle to Become Profitable

The new owners implemented immediate changes in order to make the ironworks successful. In 1801, Thomas "Loid" (perhaps Lloyd) was paid for constructing or possibly repairing a building for storing charcoal, referred to in furnace records as a "colehaus." This is probably the current Charcoal House and Cooling Shed.[47] One of the most important of the changes that occurred early in the nineteenth century was the damming of French Creek and construction of a new West Head Race entirely on Hopewell property so that lawsuits over water rights could not interfere with the operation's water supply. (Figure 3) The new head race delivered water at a lower elevation than the previous one, necessitating the construction a new, smaller water wheel (22 feet as opposed to 30 feet) in a new position – it was oriented east-west, rather than the original north-south wheel. This construction likely took place around 1805, and at the same time Hopewell's managers may have changed the blast machinery at the furnace from bellows to single-action cylinders made of wood. The cylinders moved up and down between four wooden posts, which may have provided support for a protective roof over the blast machinery.[48]

[46] Walker, 34-42.

[47] Apple, "Documentation for the Historic Base Maps," II-89; Ronsheim, "Survey Report (Historical Data), Restoration of the Charcoal House and Shed (Bldg. 9)," 16-18; Heydinger, "Historic Structures Report, Historical Data Section, Part I, Charcoal House," 1-3. Dating the Charcoal House and Cooling Shed is complicated by an 1880 entry in furnace ledgers that the Charcoal House was rebuilt at that time. Ronsheim uses an evaluation of physical evidence at the site and a review of documentary evidence to suggest that the 1880 reference should be understood to mean that certain portions of the structure were rebuilt, but not enough to constitute a new building. Heydinger deems the original date of construction to be unknown.

[48] List of Classified Structures website; Paul J.F. Schumacher, "Archeological Explorations at the Furnace Group – 1935 to 1951," September 1951. National Park Service, Cultural Resources Management Files, NERO-P, 7; Apple, "Historical and Documentary Report on the Bridge and Wheel Houses, Hopewell Furnace," 27-29; Apple, "Documentation for the Historic Base Maps," II-118-II-123; Walter E. Hugins, "The Physical History of the Hopewell Furnace Group, 1770-1883," 10. Apple believes bellows

Figure 3 – The reconstructed West Head Race, originally built circa 1805. (Robinson & Associates photograph, 2003.)

A new private road was constructed from the Birdsboro-Warwick Road to the dam between 1802 and 1807. This both facilitated construction of the dam and provided access to the dam for repairs. The Birdsboro-Warwick Road became publicly maintained in 1804. Another public road was constructed in 1809. This road intersected the Birdsboro-Warwick Road near the Blacksmith Shop and ran southwest to the Jones Good Luck Mine, facilitating transportation of iron ore.[49]

Changes were also made in the Blacksmith Shop around the turn of the century, although it is not clear whether they were made by the new owners or prior to the sale of the ironworks. The changes included plastering the floor and raising the walls and floors by approximately two feet in order to escape the damp conditions imposed by the high water table.[50]

---

continued in use at Hopewell until at least 1801, and that double-action blowing tubs were constructed in 1816. It is not, however, until 1822 that it seems certain that blowing tubs powered the blasts at Hopewell.

[49] KFS Cultural Resources Group, "Cultural Landscape Report," 30, 89-90, 109.

[50] Albright and Souder, "Blacksmith Shop," 18-19.

In 1805, a stamping mill was also constructed near the furnace complex to obtain iron from crushed slag. (The iron was then sold to nearby forges.) The stamping mill seems to have been the only profitable operation in the early years that Buckley and the Brookes operated the furnace, running until at least 1816. The furnace itself was out of blast between 1808 and 1816. Reflecting the shutdown, the furnace's store stopped selling food and cloth at the beginning of 1809. One of the most important reasons that the furnace remained closed, despite demand for iron after the beginning of the War of 1812, was the stream of lawsuits lodged against Hopewell's owners. The lawsuits involved titles to the lands they had purchased and so prevented them from harvesting the natural resources – especially wood to make charcoal – that were needed for putting the furnace in blast. The last such case was not resolved until 1824.

The resolution of one of these lawsuits, known as the Penn Claim case, seems to have been the impetus for full-scale renewal of furnace operations. The case involved 1,000 acres of land in Union Township deriving from a 1742 grant from John and Richard Penn (sons of colony founder William Penn) to Reading Furnace. The claimants against Buckley and the Brookes in the nineteenth century were the owners of Warwick Furnace, and the suit tied up valuable woodlands until 1815.[51] Hopewell Furnace's lawyer noted that its owners were "prevented from the use of the furnace for want of sufficient wood, and were oblidged to expend large sums of money to defend and carry on the tryals."[52]

Once the case was resolved, Buckley and the Brookes immediately went about preparing the furnace for operation, which the lawyer noted cost $8,000. In addition, furnace records indicate that the owners made payments of $8,500 on January 10, 1816, and $8,000 on February 2, 1816, to pay debts accrued since acquiring the furnace property in 1800. Also during 1816, the company that owned and ran Hopewell Furnace was reorganized as Daniel Buckley and Company. Despite all these changes and the large outlay of money required to pay debts and prepare the operation, the furnace was back in blast by the summer of 1816. The company store had re-opened on March 20, indicating that employees living in the village or nearby were on hand by then.[53] A cupola – a sheet-iron furnace to resmelt pig iron to create cast products – was constructed at an unknown location in 1817. Due to the number of molders employed at Hopewell in 1817 and the amount of castings produced, Hopewell historian Walter E. Hugins thought that Hopewell's cupola was probably larger than many – perhaps 18 feet tall – and powered by a water wheel.[54]

---

[51] Walker, 49-54.

[52] "Memorandum: Points to be made and proven at the Reading Court, April 1818," quoted in Walker, 49.

[53] Walker, 45-55.

[54] Hugins, "The Physical History of the Hopewell Furnace Group, 1770-1883,", 6-7.

Prosperity

Daniel Buckley and Company turned a small profit in two blasts between 1818 and 1820, despite the economic depression of 1819. With the resolution of the last lawsuits related to the title of Hopewell lands in 1824, the cost of legal defenses disappeared and more land was made available for use. Buckley and Company made a larger profit in 1825-27. The company purchased more mine and forest lands at sheriff's sales in 1825 and 1826. Much of this land today is part of French Creek State Park near Six Penny Creek. The company was reorganized again on May 15, 1827, when Daniel Buckley's sons Clement and M. Brooke Buckley joined him in a one-half share of the operation. Clement Brooke, his brother, and two sisters owned the other half of the company, now called Buckley and Brooke. The company was reorganized again in 1831, becoming Clement Brooke and Company. In this arrangement, Clement and Charles Brooke and M. Brooke Buckley each owned a third of the company. In addition to being a partner, Clement Brooke was the resident manager and ironmaster during this period. He had gone to work at the furnace as assistant clerk when his father and uncles purchased the furnace in 1800 and worked at night part-time supervising the filling of the stack during a blast. Brooke became clerk in 1804, ran the stamping mill from 1809 to 1814, and became ironmaster in 1816. He maintained his post during the furnace's most profitable period, retiring in 1848.[55]

Brooke presided over a number of refinements to furnace operation early in his tenure as ironmaster, although the physical organization of the furnace plant itself changed very little. Some of the improvements addressed transportation issues. In 1815, the northern segment of the Birdsboro-Warwick Road was completed, and in 1825 a road was built to connect the 1804 Road more directly to the furnace complex.[56]

Although neither the technology nor the spatial organization of the furnace complex changed appreciably during this time, much work was done to the buildings there. In 1818, Michael Sands was paid for building a Wheel House. It may be that Hopewell's blast machinery was changed at this time from the single-action cylinders installed at the turn of the century to double-action pistons inside wooden tubs, called "blowing tubs." Such a change would have eliminated the four posts used in the cylinder arrangement. The elimination of the posts would have erased any way to support a roof to protect the blast machinery, and a Wheel House therefore might have become necessary. The new Wheel House is likely to have been a frame structure, roofed to protect the blast machinery. The roof of this structure did not, however, connect with the Bridge House at this time, unlike the current reconstructed Wheel House-Bridge House arrangement, which is based on work done to the Wheel House in 1879.[57]

---

[55] Lewis and Hugins, 36-41; Walker, 55-57; KFS Cultural Resources Group, "Adjacent Lands Study," December 1997, Hopewell Furnace National Historic Site, 5-8.

[56] List of Classified Structures website, maintained by the National Park Service, http://www.hscl.cr.nps.gov/ reports.

[57] Apple, "Bridge and Wheel Houses," 27-29.

The furnace went out of blast for more than a year between March 16, 1828, and May 10, 1829. In 1828, more than 528 man-days of work were spent on the furnace stack, during which time the stack was rebuilt and its walls raised several feet in height. The rebuilding raised the furnace's capacity from about 700 to 1,000 tons per year. The increased height of the furnace would have required a change in the incline and ultimate height of the Bridge and Bridge House at the same time. Furnace records record nearly 700 man-days of carpentry work on unspecified projects at the furnace in 1829 and more than 125 man-days of unspecified masonry work, which may account for changes to the Bridge and Bridge House. The wooden portion of the bridge may have been shortened at this time when the furnace bank was enlarged using slag from previous blasts.[58]

It may also have been at this time that the Cast House and Cleaning Shed were rebuilt along the lines that exist in the current reconstruction. The south wall of the new Cast House stood 16 feet 6 inches farther south than the old wall. A frame Cleaning Shed was attached to the east wall of the Cast House. (Figure 4) The roofs of both structures were likely to have been clay tiles. In the Cleaning Shed, cast products were cleaned and packed in crates for shipping. The expansion of the Cast House and Cleaning Shed resulted from Hopewell's emphasis on casting products like stove plates rather than producing pig iron during this period. [59]

Perhaps associated with the rebuilding of the furnace and its production sheds was the construction of what is now known as the Wheelwright-Carpenter's Shop, a frame or log structure approximately 20 by 15 feet at the east side of the furnace complex The ruins of a wheelwright's pit and foundations now mark the location of this structure. Interviews with former employees indicated that molders slept in the wheelwright shop's loft, and research has concluded that it seems likely that the shop was used as a utility building with a variety of functions, such as a carpenter's shop, storage, and a space in which stove plates were cleaned and packed, as well as a dormitory for molders.[60]

---

[58] Apple, "Bridge and Wheel Houses," 3-5; Hugins, "The Physical History of the Furnace Group, 1770-1883," 4-5.

[59] Souder, "Cast House and Moulding Sheds," i, 5-8. The determination that both these structures had tile roofs was based on the discovery of this material during archeological investigations conducted by Ronald Mason in 1959 and Leland Abel in 1962-63.

[60] Albright and Souder, "Blacksmith Shop," 34-37. The dating of the Wheelwright/Carpenter's Shop is uncertain. An 1829 entry in Hopewell records mention plastering "the moulder's sleeping room," a function associated with the building by former employees. Since moulding at Hopewell ceased in 1845, the building referred to must have existed prior to that time. It seems unlikely that the building was used initially as a wheelwright's shop, since Hopewell records do not include payments to a resident wheelwright until 1876. Albright and Souder present evidence of multipurpose use that they concede is speculative.

Figure 4 – The reconstructed furnace complex at Hopewell, including the Cleaning Shed, Cast House, Molding Sheds, Furnace Stack, Bridge House, Wheel House, Connecting Shed, and Charcoal House. (Robinson & Associates photograph, 2003.)

From Stove Plates to Pig Iron

The most prosperous period for Hopewell Furnace was 1830 to 1838. During the blasts covering the period 1835 to 1837, Hopewell produced iron products worth $83,000 more than wages paid – more than twice the margin 10 years previously. As has been noted, most of the items produced were stove plates, which earned the highest profit. The heavy activity at the furnace required constant maintenance to continue production. Masons relined or repaired the hearth and bosh regularly, while carpenters and coopers worked on the blast machinery and millwrights repaired the water wheel.[61] The Bridge House itself was either reconstructed or repaired in 1847, evolving into the form its reconstruction takes today. This reconstruction included an expansion of the furnace bank using debris such as slag and charcoal dust The use of scales in the Bridge House to weigh charges may also have begun in that year.[62]

[61] Apple, "Documentation for the Historical Base Maps," II-112-II-123.

[62] Apple, "Bridge and Wheel Houses," 10-16. Apple bases this reconstruction on 50 man-days of carpentry on the bridge house in 1847 and the fact that the furnace was out of blast between February 14 and May 2 of that year.

Just at this time, however, changes in iron-making technology began to be introduced that made Hopewell's cold blast furnace less profitable. A method of preheating an iron furnace's air blasts was developed in Scotland in 1828 and introduced in the United States as early as 1835. The purpose of the hot blast method was to save fuel, but the technology required a system of valves and pipes on top of the furnace stack that transferred heated air back to the blast while still allowing the furnace to be charged in the traditional manner.[63] In his "Historic Scene Report" for Hopewell Furnace, Stuart Wells noted that Ann C. Brooke referred to "the introduction of the heated blast" in a letter dated April 16, 1838. Brooke told a friend that the furnace blaze was no longer visible – probably, Wells reasoned, due to the system of pipes that capped a hot blast furnace stack. Wells concludes that Hopewell probably received its hot blast machinery prior to the 1837-38 blast. The experiment with the new technology did not seem to have lasted long, however. Hopewell was listed as a cold blast furnace in state documents from 1850 and may have, according to Wells, returned to that technology as early as 1844.[64]

A second change in iron production in the second quarter of the nineteenth century was the introduction of new and cheaper fuels. In 1836, the Pennsylvania legislature authorized corporations to make iron using coke to fuel their furnaces, and two years later it authorized the use of anthracite coal. Both coke and anthracite coal offered advantages over charcoal as fuel, and anthracite was five times cheaper than charcoal. As a result, anthracite coal-fueled furnaces quickly made inroads in the iron-producing business. In 1847, the anthracite furnaces of Pennsylvania produced more iron than the entire country had produced in 1840. By 1850, there was nearly the same number of anthracite furnaces in eastern Pennsylvania (100) as charcoal furnaces (103). So quickly did the anthracite furnaces gain ground in the iron-making industry that, six years after reaching its peak of profitability, Hopewell Furnace stopped producing stove plates altogether, relying on the production of pig iron to remain profitable.[65]

Hopewell Furnace made an effort to incorporate anthracite fuel into its operations, constructing the Anthracite Furnace on a hill northwest of the charcoal furnace in 1853. The new furnace, now a ruin, was both broader and taller than the original furnace. Like the charcoal furnace, the Anthracite Furnace complex included a cast house, a coal storage building, and a bridge on which fuel, ore, and flux were transported for loading. The construction of the new furnace took place a year after the company was reorganized. Clement Brooke, who had presided over Hopewell's rise to prosperity, retired as resident manager of the iron works in 1848, but remained a partner until his death in 1861. In 1852, he bought the shares of Charles Brooke and Mathew Brooke Buckley, then sold a half share to Buckley. When Buckley died in 1853, Clement Brooke and Mathew Buckley's son Edward became co-owners of the furnace. The manager of the iron-making operation when the Anthracite Furnace was erected was Dr. Charles M. Clingan. The new technology was not, however, well adapted to Hopewell's situation. Although a large

[63] Gordon and Malone, 244-245.

[64] Stuart W. Wells, "Hopewell Furnace National Historic Site Historic Scene Report: Core Village Area and Big House Grounds" (draft), 1995, Hopewell Furnace National Historic Site, 2-7.

[65] Walker, 57-60; Lewis and Hugins, 63; Gordon and Malone, 155.

deposit of suitable ore was discovered at the Hopewell Mines in 1846 or 1847, this ore possessed a high sulphur content and had to be mixed with other ore to be usable. A road was built from Hopewell to the Schuylkill Canal at Monocacy to transport anthracite coal from Schuylkill County. Ultimately, however, transportation costs proved prohibitive, and the Anthracite Furnace equipment was moved to an iron-making operation at Monocacy, later to become Monocacy Furnace, in 1857.[66]

The Blacksmith Shop was renovated, perhaps in conjunction with the construction of the Anthracite Furnace, which would have required new tools and equipment that the shop could have produced. Once again the floor and walls were raised in the shop as a result of the rising water table, and a new forge was constructed on top of the old one. A hole was cut in the wall opposite the forge so that long iron rods could be worked in it.[67]

Although the experiment with the Anthracite Furnace failed, Hopewell Furnace remained in business another 26 years due to the increased demand for pig iron that resulted from the Civil War and from the expansion of the railroad industry after the war. The demand for iron during the war increased the price of pig iron to such a degree that labor costs did not interfere with profitability. The price of pig iron ($30 a ton when the war began) rose to more than $80 a ton by the war's end. The same was true, although to a lesser degree, with the expansion of the railroad industry, which needed iron for rails and train components. Much of the pig iron produced by Hopewell Furnace after the Civil War was purchased by A. Whitney and Sons, a Philadelphia manufacturer that produced railroad car wheels, and the Reading Railroad Company.[68]

Perhaps associated with the failure of the Anthracite Furnace was the construction of two buildings, the purpose of which seems to have been to produce charcoal more efficiently. Only ruins of these buildings remain, but both were about 15 by 41 feet and made of brick. The remains resemble written descriptions and drawings of charcoal kilns published in 1850 and later. The ruins stand near the Anthracite Furnace remains. An undated drawing of a charcoal kiln was found in Hopewell records. A desire on the part of Hopewell management to produce fuel more cheaply might be considered likely after the failure of the Anthracite Furnace, but the date of the kilns' construction has not been determined with any finality. The absence of a reference to the Charcoal Kilns before 1853, when Hopewell documentation is most complete, has led historians to conclude that they were built after that date. Based on poor construction relative to contemporary guidelines for charcoal kilns and lack of archeological evidence of their use as kilns, however, it appears that neither of the structures was ever used as a kiln. The only

[66] Walker, 61-63; Lewis and Hugins, 63, 81.

[67] Albright and Souder, "Blacksmith Shop," 19-20.

[68] Walker, 64; Lewis and Hugins, 64.

documentary reference to them to them is a rental agreement showing that a furnace carpenter, John Carpenter, lived in one of the kilns temporarily in 1878.[69]

A carriage shed, 29 feet long and constructed of stone and timbers, was attached to the east end of the Barn sometime during Dr. Charles Clingan's tenure as ironmaster (1849-1859). A straw house, 26 feet wide, replaced the forebay of the Barn, probably during this period. A frame structure used as a stable was constructed at the southwest corner of the Barn at about the same time, and a corn crib was built near the stable.[70] The Office-Store was enlarged, probably between 1860 and 1870, by raising the walls. Door and window opening were changed, interior partitions were installed, a safe was built into what had been a corner fireplace, brick chimneys were added at the gable ends of the building, and the interior and exterior were plastered.[71] It may also have been in this period that the utility shop (in the attic of which the molders slept) was converted into a Wheelwright's Shop, since a resident wheelwright appeared in furnace records in 1876.[72]

Despite the apparent market for its pig iron, Hopewell Furnace displayed signs of decline as early as 1872, when the Hopewell Mines were leased to Patterson Iron Company. The furnace went out of blast in 1874 and in 1877-78. The company's mules were sold in 1877, and the store closed several years before the furnace finally ceased operations. In 1879, however, increasing activity at the furnace indicates renewed hope for its profitability. That year, according to Harker Long, then manager of the furnace, the roof of the Wheel House was attached to that of the Bridge House, the north wall of the Wheel House was probably raised a few feet, and other work was done that resulted in what might be considered a new building. It is this configuration of the Wheel House that is evident today.[73] (Figure 5) A frame addition was attached to the south side of the Charcoal House, and its three doors were converted into windows on the north side in 1880.[74] A boiler and steam engine were installed in the furnace in 1880 as auxiliary power for the water wheel. An ore roaster to remove impurities from the iron ore and produce a higher grade of pig iron was built in 1882. All these improvements, however, couldn't overcome the high cost of producing iron with the old, charcoal-fueled, cold blast technology. The last blast at Hopewell

---

[69] Joseph R. Prentice, "Historic Structures Report, Part I, Charcoal Kiln Ruins," September 1, 1961, Hopewell Furnace National Historic Site, 2-15; Heydinger, "Revision of Documentation for the Historical Base Maps," 35.

[70] Prentice, Ronsheim, and Souder, "Village Barn, Historical Data Section," 7-8; Souder, "Architectural Data Section, Prepared for the Restoration of the Village Barn," 3-5.

[71] Prentice, Ronsheim, and Souder, "Historic Structures Report, Part II, Administrative, Architectural, Historical and Furnishing Data Section, the Office and Store Building," 1960, 3-4.

[72] Albright and Souder, "Blacksmith Shop," 35-37.

[73] Apple, "Bridge and Wheel Houses," 27-30.

[74] Souder, "Historic Structures Report, Part III, Architectural Data Section on Charcoal House," i.

Figure 5 – The Wheel House, Bridge House, and Connecting Shed, reconstructed to their appearance in 1879. (Robinson & Associates photograph, 2003.)

Furnace ended on January 15, 1883. The property was owned at the time by Edward S. Buckley and Maria T. Clingan. Hopewell's fortunes mirrored those of other charcoal-fueled furnaces in eastern Pennsylvania. By the time Hopewell went out of blast for the last time, the center of the United States iron and steel industries had moved west beyond the Blue Ridge Mountains to Pittsburgh and south to Birmingham, Alabama.[75]

[75] Walker, 65-66; Lewis and Hugins, 65.

CHAPTER III: WORKERS, HOUSING, AND COMMUNITY AT HOPEWELL FURNACE, 1771-1883

The continuing need of an iron furnace for raw materials such as wood, iron ore, and limestone meant that iron-making operations in late eighteenth- and early nineteenth-century Pennsylvania were usually constructed near these resources, often some distance from urban areas. Mark Bird, although he owned a forge in Birdsboro, established Hopewell Furnace five miles from that town, and eight miles from Morgantown. Iron plantations such as Hopewell were often conceived as relatively self-sufficient villages, supplying – as much as was practicable – the material needs of the furnace itself, as well as those of the employees living and working for the operation. Efforts to satisfy this commitment took a number of different forms at Hopewell. Furnace operators used the flat land east of the Birdsboro-Warwick Road south of the furnace complex, for instance, as a meadow to pasture draft and food animals, and the furnace owned farmland nearby where tenant farmers planted crops such as wheat, buckwheat, and rye for human consumption, and grew corn and hay for the animals.[76] As has been noted, the office where Hopewell's business operations were recorded also functioned as a store, selling the products of farms owned by the company, as well as those of neighboring independent farmers and millers. The Office-Store also sold manufactured articles received from distributors in Philadelphia and elsewhere. Artisans from whom workers could purchase farm or household items or services either lived and worked in the village or were hired by the furnace.[77]

The Work Force and Its Housing

The furnace provided housing for some of its workers, a task complicated by the fluctuating size of the work force over the life of the furnace and the variety of jobs employees performed. The number of workers Hopewell employed varied as demand for its iron rose and fell and as the operation fought to maintain its competitiveness with other iron-makers. In *Hopewell Village*, Joseph Walker wrote that 170 workers were paid by the furnace in the period 1818-1820 – early in Clement Brooke's tenure there, when he was attempting to return the operation to profitability. During Hopewell's peak years, 1835-1837, as many as 246 workers were employed. It may be supposed that when the furnace was out of blast, between 1808 and 1816 and on other occasions in the 1870s, far fewer workers were on the payroll. The employees participated in a variety of occupations specific to the industry and of a more general nature. Hopewell records list 33 different jobs for which workers were paid. Some workers were more or less permanent, some temporary, some skilled, some unskilled. When the furnace was in blast, workers skilled in iron production, such as the founder, the keeper, the guttermen, and the fillers, often worked 12-hour shifts to keep the furnace productive 24 hours a day, and therefore could not have strayed too far from the furnace itself. Other employees, such as miners, settled away from the furnace near their workplace. Still other occupations, such as the transportation of manufactured goods, required workers to travel away from the furnace, then returned them to it. Some employees were

[76] KFS Cultural Resources Group, "Cultural Landscape Report," 109-112.

[77] Walker, 189-204.

seasonal hires: Woodcutters, the most numerous furnace employees, felled trees and split logs during the winter. Farmers rented land from the furnace, sowing in the spring and harvesting summer through fall. Laborers may have held more than one job or been moved from place to place on furnace property as they were needed.[78] And not just the workers, but at least some of their family members lived in or near the village. Census records indicate that these households varied in size from three or four members to 10 or more.[79] The community at Hopewell plantation, extending as it did over several thousand acres, must then have have varied in population as the furnace's work force waxed and waned over the years from a few dozen to several hundred people.

Throughout the period of Hopewell's operation, transportation for work and domestic purposes in the rural areas and villages of the United States was by foot, horse, cart, or carriage. Employees usually lived near their place of work, and an understanding of housing on the Hopewell plantation must take into account the nature of furnace jobs and the housing opportunities that presented themselves both to workers and to furnace management. The largest number of company-owned tenant houses was 14 in 1855, according to tax records. In 1837, when Hopewell Furnace employed the largest number of workers in its history (246), management owned only 10 tenant houses. Housing on the plantation must therefore have taken a variety of forms – temporary, seasonal, or permanent – in buildings dedicated to domestic use or in those designed or used for other purposes. Housing might have been provided by the furnace, by the employees themselves, or by independent landlords, and Hopewell tenants often boarded other workers. Records show that Hopewell employees owned or rented houses in several townships in Berks and Chester counties.[80]

In the furnace's early years, some employees may have been housed in buildings already existing when the land was purchased. Mark Bird, it will be remembered, by 1772 controlled all of Owen Hugh's property, which included the land on which the Ironmaster's House stands. Hugh's mortgage for the property in 1765 mentioned "buildings," and the deed signed when he acquired it three years earlier mentioned "*messuage* or plantation."[81] A "messuage" has been defined as "a legal term used to describe a dwelling house, its outbuildings, curtilage, and the immediate lands associated with it."[82] Owen Hugh's property therefore probably included several buildings when Bird acquired it. Since furnace records do not exist from this period , it is not known where these structures were located nor what their exact functions were, but they may well have included, in addition to a dwelling or dwellings, a smokehouse, a springhouse, a privy, stables, animal pens,

[78] Ibid., 229-253.

[79] Ibid., 109.

[80] Ibid., 99-100.

[81] Fairbairn, "Hopewell Furnace Lands Traced Back to the Penns," 139-140.

[82] Carl Lounsbury, ed., *An Illustrated Glossary of Early Southern Architecture and Landscape* (Charlottesville, VA: University Press of Virginia, 1994), 230.

and grain storage.[83] It is also possible that the other tracts of land Bird purchased, such as Edward Hugh's 97 ¼-acre tract called "Detraction," had structures on them, although Hopewell historian Charlotte Fairbairn, in her study of furnace land records, mentions only the *messuage* on Owen Hugh's land.[84] Hopewell's historians and architects have thought it unlikely that any buildings predating the furnace remain standing.

The northwest wing of today's Ironmaster's House is the earliest portion of that building to be constructed, dated to 1773 by Fairbairn. National Park Service architects Norman M. Souder and Peter F. Dessauer found no evidence to disagree with that estimate, meaning that it was the earliest furnace structure designed for domestic use still standing. When it was originally built, this stone dwelling stood two stories tall with basement and attic and measured 33 by 24 feet. It seems to have been stuccoed from the beginning or shortly after its construction.[85] The house, however, was expanded in two subsequent building campaigns. (Figure 6) Ironmaster Clement Brooke enlarged it circa 1825, before he became a partner in the company, by adding a two-story, 22-by-26-foot addition at the back (east) of the original structure. The new wing, which was covered by a shed roof, included a cellar and a kitchen. At some later point, an attic was added to this wing, creating a pitched roof with a gable on the east. Around 1830, Brooke enlarged the house again, placing a 21-by-24-foot addition against the south side of the original portion of the building. This addition turned the L-shaped structure into its current T shape with a frontage stretching 53 feet 10 inches facing the furnace complex.[86] The enlargements and improvements accommodated Brooke's growing household, which reached 15 members (including servants) by 1830, but the expanded house served an additional purpose for the furnace. Some workers lived there, as well as maids and apprentices. Molders and other single male employees ate their meals in a basement dining area.[87] The house was improved as well as expanded during the furnace's years of production. The center section of the residence's front porch was built in 1867 and the ends in 1870. A bathroom was added as a frame shed over the porch at sometime during the 1860s, and the six-over-nine windows were enlarged to Victorian-style two-over-two sashes as

[83] Gabrielle Lanier and Bernard L. Herman, *Everyday Architecture of the Mid-Atlantic: Looking at Buildings and Landscapes* (Baltimore: Johns Hopkins Univesity Press, 1997), 51-60, 177-197.

[84] Fairbairn, "Hopewell Furnace Lands Traced Back to the Penns," 139-140.

[85] Hopewell Furnace, List of Classified Structures website; Peter F. Dessauer, *Historic Structure Report, Architectural Data Section: The Ironmaster's House, Hopewell Village National Historic Site*, (Denver, CO: U.S. Department of the Interior, National Park Service, Denver Service Center, August 1984), 9-19.

[86] List of Classified Structures website; Dessauer, 14-15. This chronology comes from the work of Souder and Fairbairn and is adhered to by Dessauer. The 1825 date for the first addition is based on remembrances of former furnace workers recalling what they had been told. The date for the second building campaign was based on materials and construction methods.

[87] Lewis and Hugins, 41; Walker, 90-92.

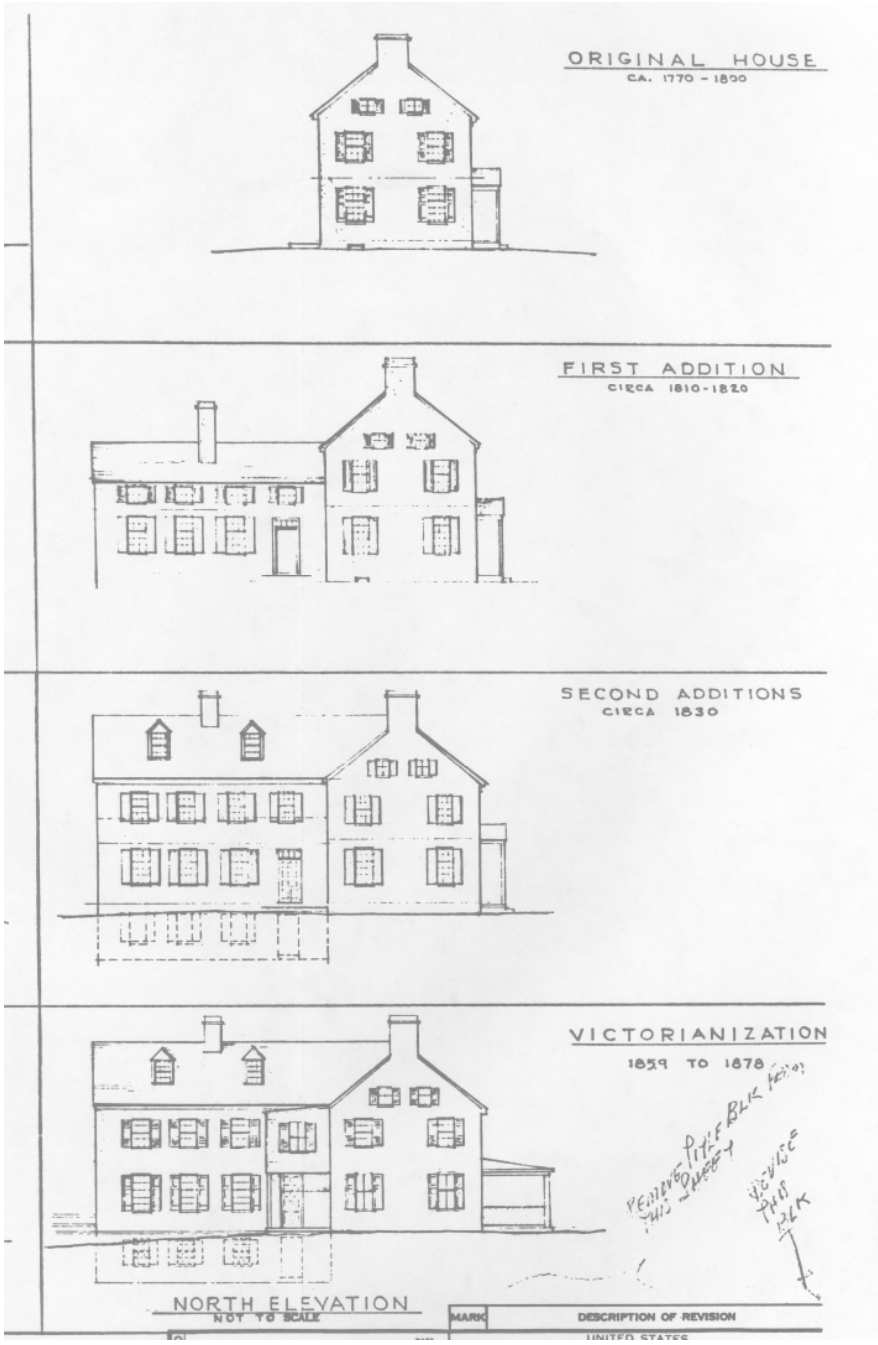

Figure 6 – Evolution of the north elevation of the Ironmaster's House. (Peter F. Dessauer, *Historic Structure Report, Architectural Data Section: The Ironmaster's House, Hopewell Village National Historic Site*, Denver: U.S. Department of the Interior, National Park Service, Denver Service Center, August 1984, 19, detail.)

well. The stepped gable that now terminates the south end of the Ironmaster's House may also have been constructed at this time.[88]

Records show that improvements inside the house were also made over the course of the nineteenth century. The house had running water by 1816, when Brooke became a resident there, and perhaps as early as 1806. When it reached its current size, the house had at least seven fireplaces. Two of the fireplaces received marble mantels in 1829, another eight years later. Some of the fireplaces might be expected to have been fitted with the kind of stoves made at the furnace. The house's windows received shades and curtains sometime after 1830. It is not currently known, however, what kinds of furnishings were favored by Clement Brooke and his family or by subsequent ironmasters. The National Park Service acquired a large collection of furniture associated with the occupation of the house, but the dates of the individual pieces stretch from 1770 to 1870, and no information indicated when they were acquired or how they were used.[89]

Alterations to the grounds around the Ironmaster's House also took place throughout the furnace's operation. A stone Spring House was constructed in 1806-07. That Spring House may be the original section of the building now standing east of the Ironmaster's House. (Figure 7) In addition to providing water for drinking and for cooking, the Spring House provided a location for cooling milk and butter. In 1808, an addition that included a fireplace and chimney was constructed on the south end of the Spring House. This addition was used to boil water for washing and to render lard.[90] The accommodation of furnace employees affected the grounds of the Ironmaster's House in other ways, such as the construction of two outdoor Bake Ovens near the kitchen in the east wing. The north oven was likely built around 1823, the south oven in 1851. The ovens allowed large quantities of bread to be baked, as well as fruit and corn to be dried. These products probably were consumed by the ironmaster's family, as well as the employees that dined in the basement of the house.[91] A wash house for the use of furnace employees may have stood very near the Bake Ovens by 1832, when a mason was paid for work there. Hopewell historian Earl Heydinger estimated its size as between 6 by 10 and 10 by 10 feet, based on the cost of the masonry work.[92] A Smoke House serving the ironmaster's family and

[88] Dessauer, 14-15.

[89] Walker, 78-90.

[90] Benjamin J. Zerbey, "Historic Structures Report, Part I, Spring House – Building #17," April 23, 1964, Hopewell Furnace National Historic Site, 2; David G. Orr and Douglas V. Campana, "Excavations at the Springhouse, Hopewell Village National Historic Site," Hopewell Furnace National Historic Site, no date (circa 1981), 1.

[91] Apple, "Documentation of Historic Base Maps," II-62-II-66.

[92] Apple, "Documentation of Historic Base Maps," II-66-II-67; Earl J. Heydinger, "Historic Structures Report, Historical Data, Part I, Bath House," June 22, 1972, Hopewell Furnace National Historic Site, 1-2.

Figure 7 – Spring House on the grounds of the Ironmaster's House. (Robinson & Associates photograph, 2003.)

furnace employees was probably constructed in 1828 and stood in the location of the current restored Smoke House (likely constructed after 1867) on the grounds of the Ironmaster's House.[93]

Other structures associated with the private life of the ironmaster were constructed in the open ground north of the house. A garden existed in this area as early as 1829, and in 1832-33 a stone wall 125 feet long was built on its south and west sides to act as a retaining wall. A picket fence was associated with the construction of this wall.[94] Eventually, although it is not clear exactly when, the garden was terraced and a path led north from the house toward the Reading-Valley Forge Road. Stone steps accommodated the rise of the terraces, and by the latter stages of the furnace's operations, the garden was filled with a variety of flowers, flowering shrubs and trees, ivy, boxwood, herbs, fruit, and vegetables.[95] A Greenhouse measuring approximately 60 by 25

[93] Emma Jones Lapansky, "Excavations at Springhouse and Smokehouse, Hopewell Village National Historic Site," prepared for the National Park Service, 1969, Hopewell Furnace National Historic Site, 2, 22-23; Apple, "Documentation for Historic Base Maps," II-23-II-25.

[94] Apple, "Documentation of Historic Base Maps," II-30-II-39; "Cultural Landscape Report," 76, 111; Walker, 95-96.

[95] Earl Heydinger, "Historic Structures Survey Report, Part I, Historical Data, Ironmaster's Garden, Partial Report, Path through Garden," May 1960, Hopewell Furnace Historic Site, 1; Paul Roberts,

feet was constructed north of the garden against the hill near the Reading-Coventry Forge Road – perhaps in 1829, when a large amount of glass was purchased by the furnace. Near the end of the furnace's productive years, the Greenhouse was heated. Garden implements were stored in a wood tool house that stood near the Greenhouse by 1858. Privies were, of course, necessary for occupants of the ironmaster's house, and one existed near the Greenhouse and tool house. The wood structure was partitioned into one area used by members of the ironmaster's family and one used by servants. This privy was probably not constructed until late in the active life of the furnace.[96] As early as 1833, an Icehouse, about 15 feet square, also existed on the hillside near the Reading-Coventry Forge Road as early as 1833. By 1867, the Icehouse was topped by an octagonal, latticework Summerhouse, where residents could escape hot weather.[97]

Like the Ironmaster's House and grounds, employee housing at Hopewell developed over time, but the course of that development is not clear. Records show that the furnace paid for construction of dwellings in 1804, 1806, 1819, 1828, 1829, and 1830. The documentary record, however, doesn't specify the location of the dwellings.[98] Housing for furnace employees should probably be understood as a combination of temporary shelters, more permanent log homes, and durable stone dwellings. The relative percentages of the total number of houses that each of these types accounted for varied with the fortunes of the furnace and its needs. The three Tenant Houses, the Boarding House, and the farm houses that exist within the park today were constructed of stone, but log, plank, or frame houses predominated in southeastern Pennsylvania throughout the late eighteenth and early nineteenth centuries and remained in continual use throughout the mid-Atlantic during the nineteenth century. In the 1798 tax lists for Chester County, the principal material of more than half the houses assessed was wood, and these houses continued to be advertised for sale beyond the third quarter of the nineteenth century.[99] A log house built in the last quarter of the eighteenth century, with a later stone addtition, still stands in Warwick Township.[100]

There are several reports of log houses in records related to the furnace. One existed as late as 1956 on the Reading-Coventry Forge Road. It appeared on an 1860 map of the area and was

---

"Historic Structures Report, Part I, Ironmaster's House Garden, Historical Data Section," no date, Hopewell Furnace National Historic Site, 1-2; Walker, 96-97; Apple, "Documentation of Historic Base Maps," II-38.

[96] Apple, "Documentation of Historic Base Maps," II-11A-II-23.

[97] Ibid., II-25-II-28.

[98] Earl Heydinger, "Historic Structures Report, Historical Data Section, Part I, Tenant House #1," 1964, Hopewell Furnace National Historic Site, 1.

[99] Margaret Berwind Schiffer, *Survey of Chester County, Pennsylvania, Architecture: 17th, 18th, and 19th Centuries* (Exton, PA: Schiffer Publishing, 1976), 217-219; Lanier and Herman, 71-79.

[100] "North Warwick Historic and Archaeological District," 7:1.

listed as being owned by a member of the Parlaman family, a name that appears in furnace records. According to Sally Care Boone, Nathan Care's daughter, the family lived in a whitewashed log house south of the Boarding House before moving into their stone house along the Birdsboro-Warwick Road in 1855.[101] The Manning House, located north of the furnace near Spout Creek, was a log house owned by the furnace.[102] In addition, Hopewell historian Russell A. Apple believed that two log houses stood along the 1809 Road, both plastered on the outside, lathed and plastered within.[103] Apple felt that a dwelling constructed in 1829 probably consisted of a stone foundation supporting a log structure, indicating that even as the ironmaking operation was becoming profitable, the owners chose to build at least some of its houses of wood.[104]

Except for Sally Boone's log house, no descriptions of these houses have been recorded by Hopewell historians, and their size and style probably varied. A log house constructed in 1770 in Chester County measured 35 by 18 feet – larger than Tenant House No. 1. It stood three stories tall, was weatherboarded, painted, and fitted with sash windows. Smaller houses – 15 by 20 feet, one and a half stories tall – were much more common. One or two rooms on the main floor, a stone chimney, and stone foundations would have been a likely arrangement.[105] The 1786 log house in Warwick Township fits this description. In a two-room log house, one of the rooms, the hall, was considered more public space; the front door opened onto this room. Cooking and eating, as well as other domestic activities and entertaining, took place in the hall. The chamber functioned as sleeping quarters.[106] Due to its age – 100 or more years in 1956 – it seems likely that the log house on the Reading-Valley Forge Road outside the National Historic Site boundaries rested on stone supports. And given Nathan Care's important position within the company, it would seem likely that his log home would have been substantially constructed as well.

Stone tenant houses constructed and owned by the furnace are represented in the village by four buildings still extant south of the furnace complex and another east of the village along the Reading-Coventry Forge Road. (Figure 8) The dwelling known as the Boarding House stands on the east side of the Birdsboro-Warwick Road, while three tenant houses were built west of the road. The original portion of the Boarding House (1770-1830) stood two stories high and measured 29 by 19 feet. It was marked by stone quoins at its corners and had a central chimney

---

[101] Apple, "Documentation for the Historic Base Map," II-148.

[102] Ibid., I-33-I-34.

[103] Ibid., II-142-II-143.

[104] Dennis Kurjack, Memorandum for the Custodian, Hopewell Village National Historic Site, September 2, 1947, 1; Apple, "Documentation for the Historic Base Maps," I-29-I-33, II-17.

[105] Schiffer, 18-19, 222, 379.

[106] Lanier and Herman, 16; Philip E. Pendleton, *Oley Valley Heritage, the Colonial Years: 1700-1775* (Birdsboro, PA: The Pennsylvania German Society, 1994), 68-69.

Figure 8 – Tenant housing along the Birdsboro-Warwick Road. (Robinson & Associates photograph, 2003.)

(the only furnace house with such a feature) that divided the house into two rooms. A one-story stone addition, 10 by 15 feet and known as a "cave," was constructed on the south side of the house for storage since the dwelling had neither a usable cellar nor attic. A 23-by-19-foot addition was later attached to the east end of the house (1830-1870), and the entire structure plastered, masking the differences between the two building campaigns.[107] Two of the tenant houses, Nos. 1 and 2, also have caves for storage, a circumstance occasioned by the high water table of the ground on which they were built. Tenant House No. 1 (1820-1850) is the northernmost of the extant tenant houses. It measures 30 by 18 feet and stands two stories tall.[108]

[107] Earl Heydinger, "Historic Structures Report, Historical Data Section, Part I, the Boarding House," November 7, 1962, Hopewell Furnace National Historic Site, 1; Apple, "Historic Base Map Documentation," II-144; Heydinger, "Revision to Historical Base Map Documentation," 27-28; Diann L. Jacox and Joseph Lee Boyle, National Register of Historic Places Inventory-Nomination Form, "Hopewell Furnace," U.S. Department of the Interior, National Park Service, Washington, D.C., 7:9; Hopewell Furnace, List of Classified Structures website. Heydinger suggests that the central fireplace might indicate an eighteenth-century construction date. Apple dates the building to an 1806 record for a new house of approximately the right number of perches of stone. Archeologist Leland Abel dates the building to circa 1830.

[108] Heydinger, "Historic Structures Report, Historical Data Section, Part I, Tenant House #1," 1; Apple, "Historic Base Map Documentation," II-141; "Hopewell Furnace," 7:9; Brooke S. Blades and

Tenant House No. 2 (1820-1850) stands one and a half stories high and measures 25 by 18 feet. Both have gable-end chimneys and plans similar to two-room log structures built during this period.[109] Tenant House No. 3 (1840-60) is a duplex, 32 by 28 feet over four bays and two and a half stories. The duplex's entrances are paired at the center of the east elevation with chimneys at both gable ends. Tenant House No. 3 differs from the other housing extant at Hopewell in its duplex form and in the porch that runs across the entire elevation facing the Birdsboro-Warwick Road.[110] Behind Tenant House No. 3 is a stone barn (ca. 1850), one and a half stories high and measuring 12 by 15 feet. Stables occupied the first floor of the barn, while the upper level was likely used to store hay. Like the house itself, the barn is stuccoed.[111] The other tenant houses may have also had barns, and privies, fenced vegetable gardens, and animal pens would likely have been associated with them as well.[112]

The house Nathan Care built for himself and his family might be considered a part of Hopewell Village, being located just a few dozen yards south of the Boarding House along the Birdsboro-Warwick Road. It stood, however, on land not owned by the furnace. Indicating the traditional nature of building practice in the area during the nineteenth century, the Care House resembles Tenant Houses 1 and 2 in its arrangment: stone construction with a gable-end chimney and two rooms on the first floor. The house, 29 by 22 feet, was probably constructed shortly after Care purchased the property in 1856; the stone barn was probably constructed two or three years

---

Douglas V. Campana, "Archeological Investigations at Tenant House No. 1, Hopewell Furnace National Historic Site, September 22-30, 1980," Hopewell Furnace National Historic Site, February 10, 1988, 6-9; Hopewell Furnace, List of Classified Structures website. Architect Norman Souder, according to Heydinger, dated this building to 1790-1810, based on overall appearances. The HRS has dated the building to 1820-1850 based on the more rigorous research of Blades and Campana.

[109] Heydinger, "Historic Structures Report, Historical Data Section, Part I, Tenant House #2," 1963, Hopewell Furnace National Historic Site, 1-2; Apple, "Historic Base Map Documentation," II-149; "Hopewell Furnace," 7:9; Garry Wheeler Stone, "Test Excavations at the School House and Tenant House No. 2," March 4, 1968, Hopewell Furnace National Historic Site, 9-18; Hopewell Furnace, List of Classified Structures website. Architect Norman Souder, according to Heydinger, dated this building to 1790-1810, based on its similarities to Tenant House No. 1. The HRS has dated the building to 1820-1850 based on the more rigorous research of Stone.

[110] Robert D. Ronsheim, "Survey Report, Tenant House #3," February 20, 1958, Hopewell Furnace National Historic Site, 1-3; Apple, "Historic Base Map Documentation," II-150-II-151; Heydinger, "Revision of Historic Base Map Documentation," 32; "Hopewell Furnace," 7:9; Hopewell Furnace, List of Classified Structures website.

[111] Apple, "Historic Base Map Documentation," II-151; "Hopewell Furnace," 7:9; Hopewell Furnace, List of Classified Structures website.

[112]KFS Cultural Resources Group, "Cultural Landscape Report," 73, Appendix G: Historic Base Maps, 1800; Hopewell Furnace, List of Classified Structures website.

later.[113] Care was one of a number of furnace employees who, like Clement Brooke, worked at several furnace jobs and eventually became manager. He served as both keeper and molder before succeeding Henry Care as founder. Next to the manager, the founder was perhaps the most important position at the furnace since he was responsible for keeping the furnace running at peak efficiency. Henry had succeeded his father Thomas Care. Members of the Care family served as founders from 1819 until the end of furnace production in 1883. Nathan Care occupied the position from 1850 until the final Hopewell blast.[114]

At least one house owned by the furnace may have been built with a specific tenant in mind. John Church was the nephew of Clement and Maria Church Brooke. He spent some of his youth at the Ironmaster's House and held the jobs of storekeeper and clerk before becoming furnace manager on Clement Brooke's retirement in 1848. The house now known as the John Church House (circa 1845), on the Reading-Coventry Forge Road near the current entrance to the historic site, may have been built for this family member, according to a former furnace employee interviewed by park historians. The house is more elaborate than the other houses, including a full basement, three fireplaces, and carved woodwork. This may also indicate that it was built for a member of the furnace community with some status, like Church. If it was built for Church, however, he did not live there long. Charles M. Clingan succeeded Church as manager in 1849, and Church subsequently moved to Union County. The house was used thereafter by tenants, such as teamster George Benner in 1866-67. A barn was built in association with the house along the road.[115]

The term "Boarding House" was not used in furnace records until 1875, and there is no evidence securely linking the current structure known as the Boarding House with that function in the second quarter of the nineteenth century. Boarding of employees, however, took place at least by

---

[113] Kurjack, Memorandum for the Custodian, September 2, 1947; Dennis C. Kurjack, Memorandum for the Custodian, September 8, 1947, Hopewell Furnace National Historic Site; Herbert H. Kissling, "Historic Structures Report, Nathan Care House, Building 25," January 23, 1962, Hopewell Furnace National Historic Site, 1-3; Apple, "Historic Base Map Documentation," I-7-I-9; Hopewell Furnace, List of Classified Structures website.

[114] Walker, 234.

[115] Robert D. Ronsheim, "Survey Report, Tenant House #3," February 20, 1958, Hopewell Furnace National Historic Site, 5-9; Apple, "Historic Base Map Documentation," I-23-I-25; Heydinger, "Revision of Historic Base Map Documentation," 30; "Houck House," file 101-05.12, Hopewell Furnace National Historic Site Library; Walker, 61, 90, 175, 203. The John Church House is one of the most difficult in the historic site to date. Hopewell's historians have disagreed over which employee it was built for. Because it was outside the village and not thought to be important to the site's interpretation in the early years of work at Hopewell, the house was converted to an employee residence in 1940 and was never studied as closely as the other tenant houses. What was apparently a brief archeological investigation, however, suggested a date of approximately 1845. John Church became one of two clerks at the furnace in 1841, subsequently married, and, according to purchase records at the Office-Store, seems to have set up housekeeping. If the house was built for John Church, it would seem to have been built around 1845.

1832, indicating another method by which furnace workers found food or housing or both. Teamsters, for instance, regularly paid for boarding at the Ironmaster's House. Thomas Care, a founder, and his two sons boarded with John Wert before 1832, and a keeper named Johnston also boarded with Wert. Care paid for Wert's coffin. That skilled iron workers boarded with Wert suggests that his house was near the furnace complex. Clerk Thomas Foster also earned credit by boarding workers in 1846-47. Boarding of employees continued throughout the furnace's period of operation.[116]

Employees whose workplaces were away from the furnace complex, such as miners, often rented Hopewell-owned houses near their workplaces. Tenant houses existed at both Hopewell and Jones mines and near what is now Hopewell Lake along the Jones Mine Road. The nature of these houses and the dates of their construction, however, are unclear.[117] The ruins of two examples of furnace-built housing and their associated outbuildings outside the village still exist within the park boundaries. These are the stone walls of the Brison House and the so-called Woodlot House, both east of the furnace. The Brison House site is located in a forested area that produced charcoal to fuel the furnace, and also includes the ruins of three outbuildings. A 15-by-10-foot house with corner chimney, probably constructed between 1860 and 1873, the Brison House was named for its presumed inhabitant, George Brison. Said to have been an African American woodcutter, Brison signed a rental agreement with the furnace in 1882, but it is unclear which tenant house he leased.[118] The Woodlot House is approximately 18 by 15 feet. (Figure 9) It appears to have been a one and a half stories high with a footing for a porch and a well.[119]

Furnace employees also occupied temporary housing of various kinds, such as the conical, pole-framed, turf-covered huts used by colliers. Since charcoal-making required constant supervision, colliers typically lodged on high ground near the half dozen hearths they managed at any one time. The location of these huts, like the reconstructed one standing near the furnace, depended on which woodlots were being coaled that season. The huts may then have been occupied only a few weeks at a time, but the sites were likely to have been used repeatedly over many years as the woodlots were managed for continued production; new huts may have been constructed for each coaling episode. These hut sites are likely to have been quite numerous, since 20 have been located within the current boundaries of the historic site, which represents only a fraction of the

---

[116] Heydinger, "Historic Structures Report, Historical Data Section, Part I, the Boarding House," 1-5.

[117] Walker, 101-102, 240-245; KFS Cultural Resources Group, "Adjacent Lands Study," 9.

[118] List of Classified Structures website; Walker, 100-107; Apple, "Historic Base Map Documentation," I-3-II-33; "Brison House," File 101.05.12, Hopewell Furnace National Historic Site Library.

[119] Apple, "Historic Base Map Documentation," I-29; List of Classified Structures website. The Woodlot House is perhaps inapproriately named. Its name was derived from its association with a CCC woodlot that was nearby, not from its relation to the furnace.

Figure 9 – Ruins of the Woodlot House, a furnace-owned tenant house outside the village. (Robinson & Associates photograph, 2003.)

land owned by the furnace. Woodcutters also frequently lodged in temporary shelters near the tracts of forest they cleared.[120]

Furnace records also show that employees sometimes slept in buildings designed for other purposes. Tradition suggests that molders slept in an upstairs room in the Cast House attached to the east side of the furnace. This probably would have been temporary shelter used during blasts, and since making cast products ceased by 1845, this use may primarily have dated to the most productive period of the furnace.[121] Two brick buildings constructed as charcoal kilns near the Anthracite Furnace were also used as domiciles. According to archeological evidence, the buildings, which were approximately 40 by 12 feet, were likely constructed after 1850 and may

[120] Heite, "Report of Archaeological Surveys in Two Tracts at Hopewell Furnace National Historic Site," 15; Carl J. Mikan and Marc D. Abrams, "Vegetation, Edaphic, and Historical Analysis of Charcoal Hearths at Hopewell Furnace National Historic Site, Pennsylvania," February 1994, Hopewell Furnace National Historic Site, 10.

[121] Earl J. Heydinger, "Historic Building Survey Report on Cast House, Hopewell Village National Historic Site," Part II, no date, Hopewell Furnace National Historic Site, 1, 11.

have been used only for residential purposes, despite the original purpose for which they were built.[122]

Although it is not always easy to determine which employees lived in which houses at Hopewell, especially during the furnace's most productive period, due to a lack of specific documentation, some understanding of the lives of the workers can gained from various sources. Furnishings, such as tables and chairs, bedsteads and cupboards may well have been homemade, as was common in rural areas at the time. Ticking for mattresses could be purchased at the Office-Store and filled with straw or feathers. Hopewell's ledgers also indicate that other furnishings were purchased at or through the Office-Store: Employees bought mirrors, bedsteads, chests, bureaus, cradles, desks, chairs, tables, stoves, dishes, tableware, cooking utensils, tubs, clocks, coverlets, comforters, and sheets there. Store accounts, however, also show that employees purchased little food from the company, suggesting that they raised most of their own or bartered with neighbors. The food that employees did buy from the store included melons, peaches, and cherries; potatoes, turnips, sweet potatoes, and beans; turkeys, pork, veal, beef, mutton, and fish; corn meal, rye and wheat flour; and sugar, tea, coffee, chocolate, salt, pepper, and spices. Archeological investigation of Tenant House No. 1 revealed the use of a range of ceramic vessels, including imported English earthenware, as well as pewter utensils.[123]

Independent farms existed east and south of the village, and, like the furnace and tenant housing, these farms changed hands and evolved over the course of the furnace's active life. Thomas Lloyd farmed land east of the furnace along the Reading-Coventry Forge Road and appeared regularly in furnace store records.[124] He built at least three stone houses on his property. The first section of one of these, now known as the Thomas Lloyd House, was built either in 1807-08 or 1813-14 and added to soon thereafter. (Figure 10) Like the Boarding House, the Lloyd House was probably stuccoed after the addition was constructed to disguise the joint between the two building campaigns. Unlike the other houses existing on what is now historic site land, the Lloyd house featured a through hall to provide access to the two rooms on the first floor and three on the second. When the addition was constructed, this hall became a central passage, a fairly high-style plan seen elsewhere in the historic site only in the Ironmaster's House. The completed house measured 42 feet 6 inches by 28 feet 6 inches and stood two stories tall with attic and basement. Surrounding the house were stone walls, dry laid at approximately the same time the house was built, separating fields and marking property boundaries. This was a common practice in

[122] Ronald D. Ronsheim, "Historical Structures Report, Part I, Charcoal Kiln Ruins," 1.

[123] Walker, 109-115; Heydinger, "Historic Structures Report, Historical Data Section, Part I, Tenant House #1," 2-3; Blades and Campana, "Archeological Investigations at Tenant House No. 1," 23-25.

[124] Walker, 444-445.

Figure 10 – The Thomas Lloyd House, now used as a residence for a park employee. (Robinson & Associates photograph, 2003.)

southeastern Pennsylvania, where rocky ground had to be cleared before it could be farmed, producing quantities of stone for building or defining boundaries.[125]

The Thomas Lloyd that built the house now standing within the historic site's boundaries was the second of that name. He inherited farmland from the first Thomas Lloyd east and south of the furnace complex in 1766. When the second Thomas Lloyd died in 1820, David Lloyd inherited the farm east of the furnace, and Thomas Lloyd III inherited the southern farmstead. The southern farmstead is now known as the Harrison Lloyd House site. The stone house that existed on the site during the period of the furnace's operation may have been constructed prior to 1798

[125] List of Classified Structures website; Apple, "Documentation for Historic Base Maps," I-4-I-5, I-26-I-28; Norman M. Souder, "Historic Structures Report, Architectural Data Section, Part I, Preliminary to the Rehabilitation of the Lloyd House," June 1959, Hopewell Furnace National Historic Site, 1-2; Earl J. Heydinger, "Survey Report (Historical Data), the Lloyd House on Tract 21," March 1, 1959, Hopewell Furnace National Historic Site, 1-2. The "Cultural Landscape Report" (147) dates the spring house to 1798 without documentation. It was constructed by the Civilian Conservation Corps. The CLR seems to have confused this Thomas Lloyd House with what Heydinger says is the first Thomas Lloyd House, now known as the Harrison Lloyd House, which existed prior to 1798 according to Heydinger. (See discussion of Harrison Lloyd House.)

and was added to twice. The farmstead also included two barns, a blacksmith shop, and a stone worm fence.[126]

Thomas Lloyd II's will also set aside the plot of land on which Bethesda Church stands "for the use it was intended." The 30-by-35-foot stuccoed stone church seems to have been constructed around 1782, according to a charcoaled note on an attic collarbeam in the church. It stands near the site of the Thomas Lloyd II House. The earliest legible gravestones in the church cemetery date back to 1807, and the cemetery wall may have been constructed at that time. Many Hopewell workers and their families appear in church records – pledging financial support and donating to work being done at the cemetery – and many were buried in the cemetery.[127] Other farm houses associated with the furnace are extant outside the national historic site boundaries. One example of this kind of building is the Wamsher House used as the superintendent's residence in French Creek State Park. (Figure 11) The two-story stone house was constructed in the third quarter of the nineteenth century on land owned by the Wamsher family, members of which appear in records of the furnace store. Sam Wamsher appears in furnace records as a supplier of wood and was paid for plowing garden plots owned by the furnace.[128]

A village such as Hopewell required education for children. Through 1836, children were taught by subscription: furnace owners found a teacher, and other families paid tuition for their children's elementary education. Lessons took place in vacant buildings, in the Boarding House, or in Bethesda Baptist Church. Thomas Foster was hired by the furnace in December 1830 to teach school in a dwelling formerly occupied by Peter Wert. In 1836, a public school for Union Township was constructed on furnace property west of Tenant House No. 1 near the 1809 Road. Clement Brooke and Company paid for construction of the school (now a ruin). The stone building measured 33 by 28 feet and stood one and a half stories tall. Brooke and Company was later reimbursed by the school district. A cinder and slag path led from the schoolhouse door to the 1809 Road. Estimates of the number of children (male and female, black and white) taught there ranged from 25 to 40. The Schoolhouse was abandoned about 1872 when Union Township constructed another one about a half mile west of the village.[129]

---

[126] Apple, "Documentation for Historic Base Maps," I-4-I-6. The site is known as the Harrison Lloyd House due to its association with Thomas Lloyd III's son, Richard Harrison Lloyd, although Thomas Lloyd III owned the house from 1820 until his death in 1863.

[127] List of Classified Structures website; Historic American Building Survey, "Bethesda Baptist Church," U.S. Department of the Interior, National Park Service, August 16, 1984; Walker, 369-370. The HABS documentation notes that a penciled inscription attributing the building to Lloyd in 1782 is "said to be" a transcription of the original date stone.

[128] KFS Cultural Resources Group, "Adjacent Lands Study," 9-10.

[129] Lewis and Hugins, 87; Walker, 346-352; Apple, "Documentation for Historic Base Maps," II-139-II-141; Stone, "Test Excavations at the School House and Tenant House No. 2," 2-7; Emma J. Lapansky, "Excavations at the Schoolhouse, June 27-July 10, 1969," Hopewell Furnace National Historic Site, 1-7.

Figure 11 – The Wamsher House in French Creek State Park, once part of an independent farm whose residents appear in furnace records. (Robinson & Associates photograph, 2003.)

Mount Frisby African Methodist Episcopal Church and the Underground Railroad

Due to the nature of their work, Hopewell Furnace workers were often members of overlapping communities. Workers involved in the process of iron-making were concentrated at the furnace stack and related buildings and in the village. Woodcutters spent the winter months on their wood lots and may have lived elsewhere during the spring and summer. Colliers spent the charcoaling season in temporary shelters, the rest of the year in permanent quarters. Independent farmers lived in their own homesteads, but sold their produce to the furnace. Some workers lived in one community but worked in another. Teamsters traveled between several communities. One unusual example of this situation was the community of African Americans that grew up near Six Penny Creek in what is now French Creek State Park. On an 1860 map of the area, which was called "the Forest," about a dozen families had homes. Members of at least two of these families, Peter Jones and Joseph Tolbert, probably worked at Hopewell Furnace – Jones as early as 1818, both at about mid-century. Other Six Penny community members may have worked as woodcutters, colliers, and teamsters.[130] The community was not unusual because some of its African American members worked at Hopewell, however. African Americans had likely

[130] "Black Community along Six Penny Creek: Research," undated, Hopewell Furnace National Historic Site Library.

worked there since Mark Bird's tenure, when the ironmaster's slaves, tradition holds, dug the east headrace. "Black" Bill Jacobs spent his entire life, nearly 100 years, at Hopewell, working as a teamster, coachman, and gardener, and many other African Americans can be found in furnace records.[131]

What was unusual about the Six Penny Creek community was that it was likely formed by runaway slaves. Pennsylvania was perhaps the most important state in the Underground Railroad of the antebellum United States. According to the National Park Service,

> "[t]he Underground Railroad refers to efforts of enslaved African Americans to gain their freedom by escaping bondage. Wherever slavery existed, there were efforts to escape, at first to maroon [fugitive slave] communities in remote or rugged terrain on the edge of settled areas….While most freedom seekers began their journey unaided and many completed their self-emancipation without assistance, each decade in which slavery was legal in the United States saw an increase in active efforts to assist escape. In many cases the decision to assist a freedom seeker may have been a spontaneous reaction as the opportunity presented itself. However, in some places, particularly after the Fugitive Slave Act of 1850, the Underground Railroad was deliberate and organized."[132]

Abolitionists had been helping escaped slaves leave the south at least since 1786, when George Washington discussed Philadelphia Quakers engaged in such practices in a letter to a friend. More organized efforts included private homes known as "depots" or "stations" where runaways stayed on their way north; and "agents" who helped the escapees along the way. Historians have described three major routes out of the south, two of which traveled through Pennsylvania on their way to New York, New England, and Canada. In Pennsylvania itself were three main routes that connected at several points. As early as 1835, escaping African Americans moved through Lancaster and Chester counties into Berks County on the way to Reading. From Reading, escaped slaves traveled to Philadelphia or to Elmira, New York.[133]

Although the ultimate destination for most runaways was to have been Canada, where escaped slaves were recognized as free and were unlikely to be pursued by their masters, some remained

---

[131] "African-Americans at Hopewell Furnace," Hopewell Furnace site bulletin, Appendix 3 of David Jenkins, "Hopewell Furnace National Historic Site, Ethnographic Resource Inventory Report," 2002, Hopewell Furnace National Historic Site Library.

[132] "Underground Railroad Network to Freedom" (Washington, DC: U.S. Department of the Interior, National Park Service, n.d.), 2.

[133] William J. Switala, *Underground Railroad in Pennsylvania* (Mechanicsburg, PA: Stackpoole Books, 2001), 11-26, 153-154.

Figure 12 – Mount Frisby African Methodist Episcopal Church, now a garage, which served the needs of African Americans living in the Six Penny Creek area. (Robinson & Associates photograph, 2003.)

in Pennsylvania to form their own communities. The community near Six Penny Creek grew large enough to form its own church, Mount Frisby African Methodist Episcopal Church, by 1856. (Figure 12) This stone church was built for the congregation on land owned by Isaac Cole, and it served as a stop on the Underground Railroad. The church, later used as a garage, still stands, and its cemetery also remains. Cole, along with another African American veteran of the Union army in the Civil War, James Jackson, is buried in the cemetery, which is the oldest African American cemetery in Berks County. The remains of a two-story stone house, likely to have been built in the nineteenth century, stand near the church. Both the church and the house are owned by the Cole family.[134]

[134] "African-Americans at Hopewell Furnace."

CHAPTER IV: TRANSITION FROM INDUSTRIAL TO AGRICULTURAL USE, 1883-1934

From its last blast in 1883 until 1896, when Hopewell's books were closed, the furnace sold the pig iron it had produced, as well as iron ore, wood, farm products, and draft animals, and leased rights to stone quarried on its property. Even after 1896, the property produced materials the owners could sell for profit. Woodcutters cut fence posts and rails from the forests, colliers produced charcoal to be sold to other furnaces, stonecutters quarried limestone, and miners dug iron ore. The chief beneficiary of these sales was the Clingan family. In 1894, Edward S. Buckley transferred his share in the furnace to Charles B. Clingan, Alan Hunter Clingan, and A. Louise Clingan Brooke in exchange for Maria T. Clingan's share in two buildings in Philadelphia. Charles and Alan Clingan thereafter managed Hopewell's forests. Mrs. Brooke and her husband Edward sold quarrying rights on 3,000 acres of property – the vast majority on Hopewell lands – for $157,000 in 1906. The Clingans used the Ironmaster's House as a summer residence until 1915.[135]

The Clingans purchased 1,106 acres of land in the vicinity of Hopewell Furnace in the period between 1907 and 1928. The purchases included 450 acres south and east of the village area, tracts that included the Nathan Care and Thomas and Harrison Lloyd farms. These properties were purchased in 1907-08. As independent farms, they were planted with wheat, rye, oats, buckwheat, and corn. Six to 10 of these fields surrounded a cluster of farm buildings. After 1910, most of the land purchased by the Clingans lay west of Hopewell Lake. Much of this area was farmland divided into smaller fields by fences or stone walls. The purchases probably indicate a change in the use of the Hopewell agricultural lands from food crops to dairy operations.[136] The dairy industry grew tremendously in Pennsylvania after 1870, and Berks and Chester counties were among the state's leading producers of dairy products. By the time the Clingans began acquiring more farmland, the most popular dairy product was fluid milk, rather than cheese or butter, as it had been in the late nineteenth century. As a result of this change in product, herds in Pennsylvania changed as well. In 1920, Holsteins, perhaps the best breed for producing milk, made up nearly 44 percent of the cattle in Pennsylvania, replacing dual-purpose breeds like Shorthorns and Devons. The transition to dairy farms also brought a change in the kinds of crops produced. Hay, pasture grass, corn, and other fodder replaced grains such as wheat.[137]

The biggest change in the village landscape resulting from the move to dairy farming took place in 1926, when the Barn was completely reconstructed and doubled in size. (Figure 13) Grading between the Barn and the Ironmaster's House had already taken place in 1922, leveling this area,

---

[135] Walker, 67-69; KFS Cultural Resources Group, "Cultural Landscape Report," 50.

[136] KFS Cultural Resources Group, "Cultural Landscape Report," 53-55, 113-114.

[137] S.W. Fletcher, *Pennsylvania Agriculture and Country Life, 1840-1940* (Harrisburg, PA: Historical and Museum Commission, 1955), 200-212.

.

Figure 13 – The modern dairy barn, as seen beyond the ruins of the furnace stack in 1935. (Jack Anderson, Hopewell Furnace National Historic Site Archives, temporary box no. 2.)

and light wells were constructed to illuminate the first floor of the Ironmaster's House at the same time. The reconstructed Barn reused portions of the stone walls from the previous building, but all the framing elements were replaced. The straw house on the south side was demolished, but its round stone pillars served as foundation piers for the new portion of the building, which was constructed of cinderblocks. A gambrel roof covered the expanded Barn, and the combination of the old stone walls and new cinderblock construction was stuccoed over for a unified appearance.

Several smaller structures associated with the old Barn, such as the corn crib and the frame stable structure, were demolished when the barn was enlarged, and it is likely that the stone and concrete block silo that stood until 1956 was constructed at this time.[138] The silo was specifically associated with the dairy industry. Introduced in Europe around 1875, silos allowed for the water- and airtight storage of green fodder, which maintained the nutrient level of the silage and protected it from decay. The use of silage reduced the need for water for cattle and, more importantly, allowed them to produce milk year round. Cattle fed on dry corn and hay did not produce milk between November and April. Silos were used in Pennsylvania by 1882, and their appearance on the state landscape increased rapidly after 1900. In 1895, approximately 50,000

[138] Souder, *Barn*, 2-7.

silos stood on American farms. Eight years later there were 400,000. Early silos were built in pits. Rectangular wooden buildings were then used to store silage. The circular-plan silo developed in the 1880s, and masonry and poured concrete silos of circular plan became practical around the time of World War I.[139] Other structures associated with dairy farming were built near the Barn as well, including a concrete watering trough in the barnyard and a 20-by-30-foot wagon shed southwest of the Barn.[140]

Hopewell's agriculture was not limited to dairying during the post-furnace period, however. Sheep were also sheltered in the village barn, and chicken coops were built west of the Birdsboro-Warwick Road and south of Tenant House No. 3. An orchard was also planted in this area.[141]

Like the Barn and the agricultural fields, the continued use of which brought physical changes, the Ironmaster's House and its grounds witnessed changes after the furnace shut down. As has been mentioned, the Clingans used the house as a summer residence, and the caretakers hired by the owners, including Harker A. Long and Nathan Care, resided in the rear wing of the house. During the period between the abandonment of the furnace and acquisition of the land by the Federal government, the low stone wall at the ironmaster's house was surmounted by a picket fence as well as wire fencing, and pens for geese, chickens, and hogs were constructed on the grounds. At the turn of the century, the grounds of the Ironmaster's House also included flower and vegetable gardens and structures such as rustic garden seats covered with ivy and arbors overgrown with trumpet vines and grapes.[142]

Abandonment of the furnace operations meant that the industrial buildings were not maintained. Many of them deteriorated rapidly. Just four years after the furnace's last blast, the south molding room and the Cleaning Shed had both vanished, and the Wheelwright/Carpenter's Shop was on the verge of collapse. (Figure 14) The furnace itself had also begun to deteriorate. Only a portion of the structure of the Cast House remained standing by 1896. The Charcoal Kilns, which had been used as residences, were probably abandoned by the turn of the century. Changes had also occurred in the village. Tenant House No. 4 burned circa 1893, and the Clingans removed a log cabin near the Boarding House to open more land to agricultural uses by 1900. The abandonment of the tenant housing likely meant that the kitchen gardens associated with them also disappeared. Utility poles lined the Birdsboro-Warwick Road by 1914. In 1930, Mrs. Brooke gave the blast machinery to the Franklin Institute in Philadelphia. The institute dismantled the machinery and built a wooden shed to protect it near the furnace stack itself.

---

[139] Allen G. Noble, *Wood, Brick & Stone*, The North American Settlement Landscape, volume 2, *Barns and Farm Structures* (Amhert, MA: University of Massachusetts Press, 1984), 69-72.

[140] KFS Cultural Resources Group, "Cultural Landscape Report," 53-55, 76-78, 152.

[141] Ibid., 114.

[142] Ibid., 103-104, 113-114.

Insert Figure 14 – The furnace complex in 1887, showing the location of the Wheelwright-Carpenter's Shop and Ore Roaster. (StokesPhoto, Hopewell Furnace National Historic Site Archives.)

Berks County realigned portions of the 1804 and 1825 roads through the unused furnace complex in 1932 in order to reduce a steep grade and eliminate a sharp turn. The work demolished a large section of the stone wall between the Office-Store and the Bridge House and covered the ore roaster remains and the foundations of the Cast House and Wheelwright-Carpenter's Shop. The road cut through the yard of the Ironmaster's House, erasing a portion of the yard wall. The work also included filling low spots and paving the Birdsboro-Warwick Road.[143] A half century after the furnace shut down for the last time, Hopewell had already lost many of the prominent characteristics of an industrial site as it was transformed into a rural, agrarian community.

[143] KFS Cultural Resources Group, "Cultural Landscape Report," 50-55, 92; Walker, 69.

CHAPTER V: THE NEW DEAL AND THE CREATION OF A NATIONAL HISTORIC SITE, 1934-1946

French Creek Recreational Demonstration Area

By the early 1930s, the lands around Hopewell Furnace – which had for more than 100 years provided iron ore and limestone for iron-making, wood for fuel and construction, and corn, grain, fruits, and vegetables for human and animal consumption – were considered of small economic value. Only a small percentage of the several thousand acres of land were in cultivation, and the soil was considered "badly washed and very stony."[144] The area's lack of productivity made Hopewell a prime candidate to become part of the Recreational Demonstration Area program, one of the New Deal initiatives of President Franklin Delano Roosevelt's administration. RDAs addressed two fundamental issues in Depression-era America: 1) They were planned to provide open spaces for leisure pursuits for the residents, especially poor ones, of crowded Eastern cities, and 2) they created job opportunities for untrained young men in a time of high unemployment. RDAs were designed as model camping and recreational facilities that would be transferred to state park systems once they had been developed.[145] Responsibility for the RDAs shifted over the course of Roosevelt's term in office. The National Industrial Recovery Act of 1933 initially vested authority to purchase property for RDAs in the Federal Emergency Relief Administration. On April 30, 1935, however, purchase authority was transferred to the Resettlement Administration of the Department of Agriculture, with responsibility for development placed with the National Park Service. In 1936, the Park Service received complete responsibility for purchasing property and developing the recreational areas.[146]

Pennsylvania was a major benefactor of the RDA program, receiving five prototype parks of the 46 that were built. Several factors influenced this situation. The state possessed a developed parks program, which had begun in the first decade of the twentieth century, and its Bureau of Parks, created in 1927, was well equipped to manage the areas once they were developed. Pennsylvania also possessed large areas of land considered submarginal – land that had been deforested by overuse in the nineteenth century.[147] A factor that influenced the location of a

[144] French Creek Appraisal Reports, "French Creek, 1936-1939," quoted in Leah Glaser, *An Industrial Place in a Rural Space: The Administrative History of Hopewell Furnace National Historic Site* (draft), prepared for the National Park Service, March 29, 2004, 16.

[145] Phoebe Cutler, *The Public Landscape of the New Deal* (New Haven, CN: Yale University Press, 1985), 70.

[146] John C. Paige, *The Civilian Conservation Corps and the National Park Service, 1933-1942: An Administrative History* (Washington, DC: National Park Service, 1985), http://www.cr.nps.gov/history/online_books/ccc, 4:1-2.

[147] Patrick W. O'Bannon and William R. Henry, Jr., National Register of Historic Places Inventory-Nomination Form, "Emergency Conservation Work (ECW) Architecture in Pennsylvania State Parks: 1933-1942, Thematic Resources," U.S. Department of the Interior, National Park Service, 1986, 8:5-8:7; Glaser, 15-16.

Recreational Demonstration Area on the lands around the Hopewell Furnace was their ownership: A single individual owned a large portion of the land, easing the process of acquisition. That owner was A. Louise Brooke, daughter of Charles and Maria Clingan and a member of the Brooke family that had owned the furnace and surrounding lands for 135 years. The Resettlement Administration sought an RDA of approximately 7,500 acres and investigated the purchase of 6,053 acres. In two separate transactions, Brooke sold more than 4,240 acres to the Federal government in August 1935, and the John T. Dyer Quarry Company sold the government an additional 1,217 acres. After other smaller purchases, the French Creek Recreational Demonstration Area totaled nearly 6,200 acres.[148]

Before the purchases had been legally completed, preliminary work began for the conversion of these lands to recreational uses. One Civilian Conservation Corps company (Company 2213). moved into the French Creek area by the end of 1934 after verbal agreements with owners of the property.[149] Much of the work around the nation in New Deal-sponsored public projects, such as RDAs, national and state parks, memorial sites, and monuments, was accomplished by what became commonly known as the CCC. Roosevelt proposed such an organization to Congress on March 21, 1933, in order to provide employment and training for young men between the ages of 18 and 25 in the midst of the Great Depression, when young people without specialized skills suffered from severe unemployment. Also included in this program were a small number of military veterans whose pensions could no longer be paid by the government and "Local Experienced Men" – local workers valued for their experience and knowledge of the area in which they worked. Passed by Congress and signed into law by Roosevelt on March 31, 1933, the Emergency Conservation Work program was designed to put these people to work on public projects, thereby reducing unemployment without affecting employment in the private sector. The program was renamed the Civilian Conservation Corps in 1937.[150]

Military discipline infused the organization of CCC camps, but authority was divided between an Army camp commander, who administered the camp itself, and a park superintendent responsible for coordinating and scheduling the work to be accomplished. Between the upper levels of administration and the enrollees were a variety of supervisory personnel. Foremen directed the work crews, but there were also project superintendents, technical experts such as historians and archeologists, and supervisors in the various trades that enrollees practiced.[151] Pennsylvania had

---

[148] Walker, 69; Roy E. Appleman, "Historical Report: French Creek Area," U.S. Department of the Interior, National Park Service, Washington, D.C., Hopewell Furnace National Historic Site, 1.

[149] Glaser, 22.

[150] Olen Cole, Jr., *The African-American Experience in the Civilian Conservation Corps* (Gainesville, FL: University of Florida Press, 1999), 2-4; Elsa W.L. Schemmer, "The Civilian Conservation Corps in Virginia: A Brief History and Survey of Extant Properties," prepared for the Virginia Department of Historic Resources, 1991, photocopy, 2-3.

[151] Paige, 3:1-2.

more CCC camps than any other state, and ECW and CCC workers created, either completely or partially, 28 of the 41 state parks existing in Pennsylvania by 1945.[152]

Company 2213 arrived at an unfinished camp, SP (State Park)-7-PA on December 10, 1934. Although the company of 200 unemployed young men remained at French Creek RDA for little more than six months, it undertook some of the earliest work there, replacing roofs and stabilizing five structures in the former iron plantation for the company's use. The company made the Office-Store its headquarters, converted the Charcoal House to a garage, and used the Blacksmith Shop for its own utility shop.[153] Company 3301 moved to the French Creek Recreational Demonstration Area on July 16, 1935, living in temporary shelters until its permanent habitation, labeled Camp SP-17, was finished in what is now French Creek State Park at the end of October.

Company 3304 replaced Company 2213 in Camp SP-7, the newly constructed buildings of which were located on the plateau north of the Reading-Coventry Forge Road where the current National Historic Site maintenance building and Quarters 98 and 99 now stand. (Figure 15) Camp SP-7 consisted of more than 20 buildings, including two rows of barracks. An access road entered from State Route 345, and portions of it remain in evidence today. The traffic island in front of the park's current maintenance building was the location of the camp flagpole, with the barracks arrayed on terraces carved into the gentle slope to the west. The complex possessed a library and workshop, an infirmary, a mess hall, officers' quarters, a bath house, latrines, and utility buildings. A utility court was created northeast of the barracks area, where the Youth Conservation Corps (YCC) Building stands today.[154] The buildings for both camps were generally utilitarian in nature and constructed in standardized, modular designs developed by the Army. The frame structures had gable roofs and were initially covered with tar paper before being weatherproofed with clapboard siding.[155] The maximum population of each camp was intended to reach 200 men.

In 1940 the CCC constructed a reservoir, connected by pipe to a spring, near Spout Run Creek. This reservoir stands next to one constructed in 1972. The water system has been upgraded several times since its initial installation. A separate group of utility buildings was added to Camp SP-7 in 1941 north of the camp itself, and a service road connected the utility group to what is now State Route 345. By then the camp was labeled NP-4 due to Hopewell's designation as a national historic site.

---

[152] "Emergency Conservation Work (ECW) Architecture in Pennsylvania State Parks: 1933-1942, Thematic Resources," 8:5-7.

[153] Glaser, 21-22.

[154] Kurtz, 2-3; Edward F. Heite, "Report of Archaeological Surveys on 198 Acres at Hopewell Furnace National Historic Site, Berks and Chester Counties, Pennsylvania," Camden, DE, May 1989, Hopewell Furnace National Historic Site, figure 3.

[155] "Emergency Conservation Work (ECW) Architecture in Pennsylvania State Parks: 1933-1942, Thematic Resources," 7:12

Insert Figure 15 – From the 1937 Base Map for Hopewell Village National Historic Site, showing location of CCC Camp SP-7 north of the furnace and proposed locations of the parking area (inset) and bypass road. (U.S. Department of the Interior, National Park Service, "Base Map as of 1937, Part of the Master Plan, Hopewell Village National Historic Site," Hopewell Furnace National Historic Site Archives.)

Figure 16 – Civilian Conservation Corps Pump House. (Robinson & Associates photograph, 2003.)

Three of the CCC buildings remain in use today. A one-story, frame pump house (now building No. 51) built in 1935 stands near Quarters 98 and 99. (Figure 16) One-story cinderblock buildings were built in 1941 for use as an oil house (No. 66) and a storage building (No. 67) in the utility court north of the camp. In addition, the concrete pad of the CCC firehouse can also be seen near Quarters 98 and 99. Other remnants of the camp are buried below ground near the present maintenance building. These include concrete slabs and foundations for the mess hall, infirmary, and canteen near the current maintenance building. In the original utility area northeast of the camp itself, the YCC building was constructed on the site of a larger CCC building, the foundations of which are still visible. Between the utility area and the camp was a parade ground that today is an open field. The remains of CCC Camp SP-7/NP-4 have not yet been evaluated through archeological research. Their contributing/noncontributing status therefore remains to be determined.[156]

[156] KFS Cultural Resources Group, "Cultural Landscape Report," 59; "Hopewell Furnace," 7:12; Heite, "Report of Archaeological Surveys on 198 Acres …," 17-20. As was noted in the introduction, the contract for the HRS (September 23, 2002) established that Robinson & Associates would determine the contributing/noncontributing status of archeological resources based on existing evaluations. Although they note the presence of archeological resources related to the CCC camp, neither the "Cultural Landscape

Although Camp SP-7 was built at some distance from the historical remains of the furnace complex, its presence did have an adverse effect on those resources. As was the case in other CCC camps around the country, companies 2213 and 3304 used existing buildings for camp purposes and appropriated ruined and unusable structures for building material. As has been mentioned, the CCC enrollees replaced extant roofs and reportedly removed historical artifacts from the buildings they occupied. The CCC also disturbed other historic remains. Slag piles around the furnace complex, for instance, were used in the construction of both CCC and park roads. Stones from the East Head Race retaining walls and from walls marking former field boundaries were used in road construction. CCC workers regraded low-lying ground near the Ironmaster's House and the Boarding House, affecting the results of future archeological excavations. Most damaging, perhaps, was the disposal of some of the furnace records held in the Office-Store.[157]

From RDA to National Historic Site

The French Creek RDA was not, however, planned as a historic site, so it should perhaps not be surprising that enrollees and their supervisors altered historic structures and ignored potentially valuable sources of information. The National Park Service itself had been in the history business only five years when the CCC arrived at Hopewell in 1934. Park Service responsibility for historic sites began with the establishment of the George Washington Birthplace National Monument and Colonial National Monument, both in 1930, and the creation of a history division in the Branch of Research and Education the following year. As the result of an executive branch reorganization that transferred historical areas previously administered by the War Department to NPS jurisdiction, 57 military parks, national cemeteries, and monuments came under Park Service administration in 1933. When the Historic Sites Act was signed into law on August 21, 1935, the NPS became not only the administrator, but the originator of historic sites.[158] Hopewell Village was the first industrial complex the Park Service established as a historic site.[159]

Report" nor the "Cultural Landscape Inventory: Hopewell Furnace Landscape" assess their significance. Heite's report describes the resources as "potentially … useful," but does not evaluate their significance. For the purposes of the HRS, using National Register of Historic Places standards, Robinson & Associates considers the CCC camp location (including visible foundations, below-grade resources, and visible remnants of the circulation system) as a single archeological site. Its contributing/noncontributing status has been designated as "to be determined" due to the lack of definitive evaluation in existing studies. NPS Northeast Region staff concurred with this evaluation, per electronic mail from project director Dr. Clifford Tobias on November 2, 2004.

[157] Appleman, "Historical Report," 29-30; Kurtz, 2-3; Glaser, 21.

[158] Harlan D. Unrau and G. Frank Williss, *Administrative History: Expansion of the National Park Service in the 1930s* (Denver, CO: U.S. Department of the Interior, National Park Service, Denver Service Center, September 1983), http://www.cr.nps.gov/history/online_books/unrau-williss/adhi, 5:A:1, 5:B:1; 5:E:1; 5:H:5.

[159] Glaser, 36.

The historical importance of the remaining furnace buildings at Hopewell seems to have been first recorded by Gustavus Mang, a CCC architect at Camp SP-7 who reported on the history of the area in April 1935 and recommended the preservation of the furnace buildings.[160] Ronald F. Lee, the Emergency Conservation Work historian for state parks, followed up on Mang's report, visiting Hopewell in May. He proposed that CCC activities should be removed from the historic buildings until more research could be done and recommended their preservation.[161] At its May 1936 meeting, the Advisory Board on National Parks, Historic Sites, Buildings, and Monuments, which was created by the Historic Sites Act, agreed with Mang and Lee on the national significance of the Hopewell buildings, and by February 17, 1937, Acting National Park Service Director Arthur Demarary recommended setting aside 250 acres of the French Creek Recreational Demonstration Area to become a historic site. Following a boundary study by NPS historian Melvin Weig that weighed RDA requirements as well as interpretive needs of the historic site, Acting Secretary of the Interior E.K. Burlew designated 213.696 acres of land at French Creek as the Hopewell Village National Historic Site on August 3, 1938.[162]

The designation order cited Hopewell's "relationship to the colonial history of the United States" as the reason for the area's importance.[163] It is clear from National Park Service records, however, that historians and administrators understood the century-long duration of Hopewell's historic significance from their earliest historical investigations. Region II historian Roy Edgar Appleman visited the site in July 1935, for instance, and his August 19 report went further than Mang's in recommending, not only preservation of the furnace buildings, but restoration of as many as possible and in as complete a condition as possible. "It seems very desirable," Appleman wrote, "that the old Hopewell Furnace be restored to its original condition … so that people of the present day will find in the Hopewell Furnace group a complete restoration, from which they may study and learn the manner in which iron was made in primitive American fashion."[164] Appleman specified "original appearance" as its configuration in 1883, when furnace operations ceased, concluding that little had changed between its initial blast around 1770 and that time.[165]

---

[160] Kurtz, 3.

[161] Ronald F. Lee, "Inspection Report on French Creek Submarginal Land Project," May 29, 1935, Record Group 79, Records of the National Park Service, entry 7, Central Classified Files, 1933-49, box 2626, National Archives and Records Administration, College Park, MD, 1.

[162] For a complete discussion of the creation of the Hopewell Village National Historic Site, please see chapters 2 and 3 of Glaser's administrative history of the park.

[163] Glaser, 52.

[164] Appleman, "Historical Report," 30-31.

[165] Ibid., 31.

Appleman's fixing of the restoration date and his recommendations for the interpretation of the furnace complex began a debate that continued for 30 years, not subsiding until restoration and reconstruction of the furnace and the village was mostly complete in the mid-1960s as a result of funding from the National Park Service's Mission 66 program. The historian himself later proposed that the furnace complex and village be restored to its appearance in the last decade of the eighteenth century, and Weig noted that Hopewell "illustrates one highly significant phase of late eighteenth century and early nineteenth century American industrial history," rather than colonial history, before the area was designated as a national historic site.[166] At the time of their writing, however, the reports of Mang, Appleman, Lee, and Weig served mainly to spur NPS officials to use CCC labor to preserve the historic buildings.

The Work of New Deal Relief Programs at Hopewell Village

Army veterans occupied the CCC rolls at Hopewell, but although the camps were designed to house 200 men each, the size of the work force rose and fell over the course of the program, and monthly and annual reports of Hopewell's superintendents often bemoan the lack of labor, especially skilled labor and supervisory staff, to accomplish the work of preservation and development. The average daily work force at the CCC camps at the end of March 1937, for instance, was 121 at SP-7 and 138 at SP-17.[167] The latter camp was closed down completely by the end of June 1937 due to cuts in the CCC program.[168] The two CCC camps divided their time at French Creek between the historic site and the recreational facilities of the RDA, and on occasion enrollees were assigned temporarily to other projects. Between January and August 1938, for instance, 90 enrollees from Camp SP-7 spent their time erecting a new CCC camp at White Haven, Pennsylvania.[169]

[166] Roy Edgar Appleman, "Proposed Restoration Plan for Old Iron Making Village, French Creek Project, Hopewell, Pennsylvania," U.S. Department of the Interior, National Park Service, Second Regional Office, Bronxville, NY, January 15, 1936, Hopewell Furnace National Historic Site Library, 3-4; Melvin J. Weig, "Report on Proposed Hopewell Village Boundary at French Creek Recreational Demonstration Project," April 19, 1937, Record Group 79, Records of the National Park Service, entry 7, Central Classified Files, 1933-49, box 2625, National Archives and Records Administration, College Park, MD, 3.

[167] Project Manager's Report, March 31, 1937, Record Group 79, Records of the National Park Service, entry 47, Records Concerning Recreational Development Areas, box 81, National Archives and Records Administration, College Park, MD.

[168] E.K. Burlew, Assistant to the Secretary of the Interior, to Senator Joseph F. Guffey, July 10, 1937, Record Group 79, Records of the National Park Service, entry 47, Records Concerning Recreational Development Areas, box 83, National Archives and Records Administration, College Park, MD.

[169] Camp Inspection Report, November 30, 1938, Record Group 35, Records of the Civilian Conservation Corps, entry 115, Camp Inspection Reports, 1933-42, box 181, National Archives and Records Administration, College Park, MD.

The CCC crews were supplemented by local residents enrolled in New Deal work relief programs such as the Federal Emergency Relief Administration, the Works Progress Administration, and the Work Projects Administration, but the size of this work force waxed and waned as well. Between July 1940 and June 1941, 110 men were employed by the ERA at Hopewell, but in October 1941, the WPA program averaged only 35 workers per day, while the CCC averaged 96.[170] CCC labor was reduced further after October, averaging only 30-40 workers per day. With the United States' entry into World War II in December 1941, programs like the CCC and the WPA were reduced further and eventually ceased altogether. CCC Camp NP-4 was closed on April 15, 1942. WPA projects at Hopewell ended with fiscal year 1943.[171]

Early in the history of the French Creek Recreational Demonstration Area, CCC workers were occupied by the construction of recreational facilities and of Hopewell Dam, which created Hopewell Lake as it exists today. Camp SP-7 Superintendent M.J. McCarthy wrote that by spring of 1936, Company 3304 had begun work on the Baptism Creek Picnic Area, which would ultimately consist of stone fireplaces, two springhouses, two drinking fountains, park seats, a picnic shelter and concession building, picnic tables and benches, a double latrine, a parking area, footbridges, and two vehicle bridges. Enrollees built the structures from local materials. (Figures 17 and 18) Trees were cut in the RDA forests, then sent to a government saw mill to be transformed into lumber. Baptism Creek Picnic Area opened in the summer of 1936.[172]

Several features of the picnic area remain today – some altered by subsequent use, some in decay – although the picnic area is no longer open. The visible features include the picnic shelter and concession building, two springhouses (Lenape and Woodlot House), several fireplaces, two drinking fountains, foundations of the latrine, foundations of vehicle bridges, and the trails (now parts of the Boone, Lenape, Raccoon, and Buzzard trails). The remains of the parking area,

---

[170] Annual Report of the Superintendent, fiscal year 1941, Record Group 79, Records of the National Park Service, entry 7, Central Clasified Files, 1933-49, box 2626, National Archives and Records Administration, College Park, MD; Superintendent's Monthly Narrative Report, October 1941, Record Group 79, Records of the National Park Service, entry 7, Central Classified Files, 1933-49, box 2627, National Archives and Records Administration, College Park, MD.

[171] Annual Report of the Superintendent, fiscal years 1942 and 1943, Record Group 79, Records of the National Park Service, entry 7, Central Classified Files, 1933-49, box 2626, National Archives and Records Administration, College Park, MD.

[172] M.J. McCarthy, Superintendent, Special Report, Camp PA SP-7, CCC Company 3304 (Veterans), Birdsboro, Berks County, Pennsylvania, French Creek Recreational Demonstration Project, March 31, 1936, Record Group 79, Records of the National Park Service, entry 41, Records of the Branch of Recreation, Land Planning and State Cooperation, box 121, National Archives and Records Administration, College Park, MD; "Emergency Conservation Work (ECW) Architecture in Pennsylvania State Parks: 1933-1942, Thematic Resources," 7:4-6; Glaser, 24. For more on the development of the rustic architecture in national parks, see Linda Flint McClelland, *Building the National Parks: Historic Landscape Design and Construction* (Baltimore: Johns Hopkins University Press, 1998).

Insert Figure 17 – Parking area near the Baptism Creek Picnic Area, circa 1940. (Hopewell Furnace National Historic Site Archives, CCC Photo Album.)

Insert Figure 18 – Baptism Creek Picnic Shelter and Concession Building, circa 1940. (Hopewell Furnace National Historic SiteArchives, CCC Photo Album.)

which consisted of a slag surface with borders constructed of logs, are currently below ground.[173] (Figures 19 and 20) The buildings, structures, and small-scale features all followed the rustic designs for park construction that had developed since the National Park Service was established in 1916.[174]

The one-story picnic shelter and concession building consisted of an enclosed concession area 18 feet 8 inches by 18 feet 5 inches with plank siding, gable roof, and a concrete floor and an open, 20- by 30-foot picnic shelter with a wood gable roof supported by stone piers. The spring houses – roughly 7 feet long, 6 feet wide, and 3 to 4 feet tall – were also built of stone with wood roofs. Stone was used for the structure of the drinking fountains and fireplaces as well, to which were added metal spigots and grates, respectively.[175] All of the resources associated with the Baptism Creek Picnic Shelter have been determined to contribute to the significance of the Hopewell Furnace National Historic Site, with the exception of the latrine foundations. The concession building and picnic shelter, bridges, spring houses, parking area, roads, trails, water fountains, and fireplaces illustrate the work performed by the CCC, which was important as one of several New Deal programs developed by the Roosevelt administration to combat the Depression. The CCC was also important in helping to create numerous recreational and historical parks around the country, all of which were expressed in the rustic style favored by the NPS at this time. The latrine foundations are an archeological resource and have not yet been investigated. Their contributing/noncontributing status is listed as "to be determined" as the result of this lack of definitive archeological analysis.[176]

According to a report by Camp SP-17 Superintendent Robert I. Kintzer, Company 3301 occupied itself with the conversion of an Army camp site into a family cabin area for the RDA and with the construction of Hopewell Dam. By the spring of 1936, a two-mile-long park road had been constructed for access to the camp site, which was being graded by the CCC, and 3,800 feet of cinder walks had been constructed. Trees and shrubs were transplanted from the future site of Hopewell Lake to landscape the family cabin area. Work on the dam was in its early stages by this time, only 10 percent of the earth excavation and 30 percent of the rock excavation having

[173] In 1994, the Baptism Creek Picnic Shelter and Concession Building was determined eligible for inclusion as a contributing building in the National Register of Historic Places documentation for Hopewell Furnace National Historic Site. (Mark Luellen, Determination of Significance – Baptism Creek Picnic Shelter and Concession Building, August 2, 1994, Hopewell Furnace National Historic Site.) The determination of eligibility does not, however, include other CCC resources associated with the picnic area, such as the stone fireplaces, water fountains, springhouses, latrine foundations, and parking lot.

[174] McClelland, chapter 11.

[175] List of Classified Structures.website.

[176] Although an archeological site, the Baptism Creek parking area was determined to be a contributing resource by the "Cultural Resource Report." NPS Northeast Region staff concurred with the evaluation of the latrine foundations contributing/noncontributing status, per electronic mail from project director Dr. Clifford Tobias on November 2, 2004.

Figure 19 – CCC-constructed vehicle bridge near Baptism Creek Picnic Area, now supporting a pedestrian bridge. (Robinson & Associates photograph, 2003.)

been completed. Enrollees stationed at Camp SP-17 also surveyed 800 acres of the RDA to help with the creation of a base map and helped the local power company construct 1.2 miles of power lines for RDA use.[177] The work of clearing the site of Hopewell Lake was still underway a year later.[178] As there were at least two furnace tenant houses in the area that became the lake, it may be that materials from these houses were appropriated for use in the construction of the RDA facilities.[179] The work of the CCC and ERA crews ranged over the entire gamut of infrastructure creation in the RDA, as can be seen in the seven-page, single-spaced account of work done

[177] Robert I. Kintzer, Superintendent, Special Report, Camp PA SP-7, CCC Company 3304 (Veterans), Birdsboro, Berks County, Pennsylvania, French Creek Recreational Demonstration Project, March 31, 1936, Record Group 79, Records of the National Park Service, entry 41, Records of the Branch of Recreation, Land Planning and State Cooperation, box 121, National Archives and Records Administration, College Park, MD.

[178] Arthur C. Sylvester, Project Manager's Report, March 15, 1937, Record Group 79, Records of the National Park Service, entry 47, Records Concerning Recreational Development Areas, box 81, National Archives and Records Administration, College Park, MD.

[179] Apple, "Documentation for Historic Base Maps," I-18-I-19.

Figure 20 – CCC-constructed springhouse near Baptism Creek Picnic Area. (Robinson & Associates photograph, 2003.)

between April 1933 and December 31, 1940. In addition to the construction of buildings, structures, and roads for enrollees and for recreational purposes, CCC and ERA workers constructed sewage and water systems, dug wells, erected signs and markers, cleared hiking trails, built docks and created beaches at the lake, laid pipe and dug drainage ditches, fought fires, created fire breaks, removed material considered to be fire hazards, fought tree disease, cleared vistas, and planted and maintained trees and shrubs.[180] Among the hiking trails cleared by the CCC and still in use are the Boone Trail near Hopewell Lake, the Lenape Trail north of the Reading-Coventry Forge Road, Mill Creek Trail along the northern boundary of the historic site, Raccoon and Buzzard Trail east of Route 345, and a portion of Horse Shoe Trail, which passes through the Harrison Lloyd farmstead.[181]

[180] U.S. Department of the Interior, National Park Service, "French Creek Project RDP-PA-7: CCC and ERA Work Accomplished under Supervision of the National Park Service," April 1933 to December 31, 1940, no date, Record Group 79, Records of the National Park Service, entry 81, Central Classified Files, 1936-52, box 89, National Archives and Records Administration, Philadelphia, PA.

[181] KRS Cultural Resources Group, "Cultural Landscape Report," 93-95.

When Mang, Lee, and Appleman visited the Hopewell area in the spring and summer of 1935, the remaining historic structures included the Ironmaster's House, the Spring House, the Blacksmith Shop, the Charcoal House, the Office-Store, six tenant houses, and the furnace stack. Charcoal hearths remained visible west of the tenant houses. The blast machinery, owned by the Franklin Institute, was stored near the furnace itself, but for the most part the wooden structures – the Bridge House, the Wheel House, and the Cast House and Cleaning Shed – had disappeared. The remains of the brick Charcoal Kilns were visible, as was the course of the East Head Race. The original village Barn was hidden by the stucco of the expanded dairy barn.[182] While restoration plans were being considered, some work went forward. Jackson Kemper, hired as a research assistant with ERA funds, undertook historical research, including interviews with longtime residents and investigations of local repositories, in the summer of 1936. Kemper also discovered documents relating to the furnace, including a blast book for the years between 1852 and 1875, in the loft of Edward Brooke's stable. A room was set aside in the Ironmaster's House in the October 1936 for the storage of artifacts. Kemper also recruited collier Lafayette Houck to recreate a charcoal burn in November on the site of an old hearth.[183]

CCC and ERA enrollees cleared the furnace of vegetation, and measures were taken to prevent water damage to the furnace stack. Stabilization of the furnace stack under the supervision of CCC camp engineer Chris Eben began in early 1937. (Figure 21) The stabilization, devised by Superintendent M.J. McCarthy, consisted of inserting steel rods into the stack walls and using cement to reset the stone courses. Stabilizing the furnace in this manner meant that it could never be functional.[184] Construction by the CCC of a road to bypass the historic site to the east, now State Route 345, began in 1937 and was completed about two years later. The construction of this road and other road work in the area included the construction of bridges and culverts in the rustic manner, including a bridge crossing French Creek on State Route 345, two bridges across Baptism Creek on the Reading-Coventry Forge Road, the crossing of Spout Run, and culverts on Mark Bird Lane and near the Church House. [185]

Historical and archeological studies also got underway for the furnace stack and the East Head Race by April 1938, and mud and debris were removed from the Tail Race and wheel pit in June. An inventory of historic buildings was also begun that spring, as was the cataloging of artifacts. According to Senior Foreman-Historian John P. Cowan, most of the CCC workers were involved

[182] Appleman, "Historical Report," 24-26; Weig, "Report," 7.

[183] Jackson Kemper III, Research Assistant, Monthly Reports, August 1936-January 1937, Record Group 79, Records of the National Park Service, entry 81, Central Classified Files, 1936-52, box 89, National Archives and Records Administration, Philadelphia, PA.

[184] Glaser, 45-47.

[185] KFS Cultural Resources Group, "Cultural Landscape Report," 93.

Insert Figure 21 – Furnace stack during CCC stabilization. (Hopewell Furnace National Historic Site Archives, CCC Photo Album.)

in RDA work at this time because jobs for the historic site had not yet been approved.[186] That situation changed in the second half of 1938, as indicated by several CCC job titles for that period: "Reconnaissance and Archeological Investigation," "Guide and Contact Station," and "Restoration Historic Structures."[187]

Lemuel A. Garrison became the first superintendent of Hopewell Village National Historic Site in November 1939. Three restoration projects were underway at the time. Army veterans enrolled in the CCC continued their restoration of the furnace stack, an ERA crew of local men was engaged in surveying and marking the boundaries of the historic site, and NPS archeologist Thor Borresen had begun his investigation of the East Head Race. CCC and ERA/WPA workers made slow progress from this time until those programs were terminated during World War II. As a National Historic Site, Hopewell's restoration was governed by established procedures that called for extensive research before much work beyond stabilization could be undertaken. Early in Garrison's tenure, Hopewell lacked research technicians, hindering progress in this area. An archeologist, John C.F. Motz, was not assigned to Hopewell Village until April 10, 1940, and although he began excavations around the Blacksmith Shop with CCC workers in May and began training ERA enrollees in archeological techniques in July, archeology remained on hold in August because the priorities list had not yet been approved. A research technician, local historian Charles B. Montgomery, was not hired until October 1940.

The active assembly of historic artifacts at Hopewell began with its designation as a historic site. Furniture and household items required analysis and cataloging, as did industrial, agricultural, and domestic items discovered during archeological excavations. When Motz began working at Hopewell, accumulated artifacts occupied one room of the Ironmaster's House. One of Motz' first jobs was to begin an inventory of these items, which he finished on April 29, 1940. Subsequent archeological work resulted in more artifacts, and the park also accepted antiques donated by local residents. Motz also became responsible for inventorying letters and documents discovered beneath the floorboards in the Office garret. Artifacts steadily accumulated as archeological and restoration efforts continued.[188]

For the most part, workers with particular areas of expertise, such as Montgomery, were hired with ERA funds, and ERA enrollees did much of the technical work, such as research and drafting. Still, Garrison and his staff learned to juggle their funding and seek out flexibilities in

---

[186] John P. Cowan, Senior Foreman-Historian, Monthly Reports, April and June 1938, Record Group 79, Records of the National Park Service, entry 7, Central Classified Files, 1933-49, box 2626, National Archives and Records Administration, College Park, MD.

[187] Camp Inspection Report, November 30, 1938, Record Group 35, Records of the Civilian Conservation Corps, 1933-42, entry 115, Camp Inspection Reports, box 181, National Archives and Records Administration, College Park, MD.

[188] Kurtz, 11-26. Kurtz' draft report is the definitive history of the difficulties Hopewell Furnace has had with its artifact curation.

the rules. The superintendent used CCC funds in June 1941, for instance, to purchase Hopewell's blast machinery from the Franklin Institute.

Despite the administrative, labor, and funding difficulties, Garrison could claim a number of accomplishments at Hopewell between his arrival in November 1939 and his departure in September 1941. Plans for the conversion of the John Church House (then called the Houck House), into a residence for the superintendent were submitted for approval in February 1940. A kitchen wing and carport were added to the building, and Garrison moved into the house in December 1940. The Church House has served as the residence of many of Hopewell's superintendents. CCC architect Paul Koch prepared plans for restoring the Bake Ovens behind the Ironmaster's House in April 1940; work began in September. An ERA crew began paving the bypass road around the village in May 1940 and finished the job in August. In August, after Motz's research on the Blacksmith Shop, enrollees began to put it in operating condition. By October the shop was making and repairing items like hinges and nails. CCC workers cleared debris and brush from the National Historic Site, especially the orchard area, and regraded portions of the East Head Race in an effort to resolve drainage problems. Stabilization of the furnace stack continued, and the CCC began to assemble the blast machinery and water wheel in July 1941. Enrollees in WPA and CCC programs also began acting as guides to the historic area that same month.[189]

The National Historic Site during World War II

Ralston B. Lattimore succeeded Garrison in September 1941. A year later, Emil C. Heinrich took Lattimore's place when the latter was inducted into the Army. The work accomplished under these two men, extending over the course of World War II, could best be described as maintenance and protection, as the termination of programs like the CCC, the ERA, and the WPA decreased sources of funding and labor. During fiscal year 1942, the National Park Service purchased the collections of furniture, vehicles, and equipment archeologist Motz had acquired from the Brooke family. Motz purchased the artifacts himself when the NPS could not so that the collections were not dispersed.[190] Among the work accomplished was the completion of the Bake Ovens restoration in October 1941. CCC enrollees continued restoration of the furnace stack (which was described as 80 percent complete by January 1, 1942) and the water wheel. The CCC also began construction of a group of utility buildings north of Camp NP-4, including the Oil House and Storage Building that remain in use. The enrollees laid out a road to reach the new utility area from what is now Route 345. A portion of this road still exists.[191] Although the

[189] Superintendent's Monthly Narrative Reports, December 1939-September 1941, Record Group 79, Records of the National Park Service, entry 7, Central Classified Files, 1933-49, box 2627, National Archives and Records Administration, College Park, MD.

[190] Annual Report of the Superintendent, fiscal year 1942, Record Group 79, Records of the National Park Service, entry 7, Central Classified Files, 1933-49, box 2626, National Archives and Records Administration, College Park, MD.

[191] Heite, "Report of Archaeological Surveys on 198 Acres …," 20.

buildings were mostly complete when the CCC project at Hopewell ended on April 15, 1942, Lattimore considered them of little value, perhaps because water and electricity had not been supplied to the utility area. WPA workers began work on a park entrance road from the bypass road in September 1941. The WPA program was terminated on June 30, 1942, and it is not clear whether the road was finished by this time. One of the last tasks accomplished by WPA workers was the backfilling of archeological investigations that had begun near the furnace in January 1942.

In August 1942, the WPA program at Hopewell was reopened to allow for maintenance of the facility. In October, the program was deemed "Defense Certified" due to the planned creation of a rest area for Allied sailors in Camp NP-4, and funding continued until February 1943. The funding was especially important at this particular time. Hopewell Village and the French Creek RDA were recombined for administrative purposes on June 6, 1942, making Lattimore and then Heinrich responsible for the administration and upkeep of nearly 6,200 acres of land. In addition, on July 4, 1942, a storm blew over a tree that damaged a chimney, the main roof, part of the stepped gable wall, and the porch roof of the Ironmaster's House. It is not precisely clear how many WPA enrollees were employed at this time, but during January 1943, when repairs on the Ironmaster's House were completed, 15 enrollees worked 15 days. WPA employees also performed maintenance on the site's historic buildings and cleared the buildings and grounds of nonhistoric additions and materials.

After the end of the WPA program, staffing levels at Hopewell hovered at about three employees to administer the 6,200-acre site, and for the rest of the war, work at French Creek/Hopewell Village consisted mostly of maintenance and the clearing of weeds and brush. Workers did find time to remove debris from the Barn in March 1943, and "rebuilt and strengthened" the barn at "Quarters No. 2."[192] With permission from the Navy, park headquarters were moved from the historic village to the CCC technical building in Camp NP-4 during fiscal year 1943. Governmental entities other than the National Park Service accomplished some work on the circulation system at Hopewell during World War II. The Navy blacktopped the road to Camp NP-4, then being used as a rest camp, in August 1943, and the Pennsylvania State Highway Commission repaired the Birdsboro-Warwick Road where it ran through the historic site in November. In November 1944, Union Township repaired the bridge it had constructed across French Creek on the Birdsboro-Warwick Road near the blacksmith shop.[193]

---

[192] It is not clear which building this note refers to. It may refer to the Thomas Lloyd House. The account of New Deal work undertaken at the site – "French Creek Project RDP-PA-7: CCC and ERA Work Accomplished under Supervision of the National Park Service," April 1933 to December 31, 1940 – refers to the John Church House as "Residence No. 1." The only other existing house used as quarters at this time was the Thomas Lloyd House. Superintendent Joseph R. Prentice's 1959 "Survey Report (Administrative Data): The Lloyd House on Tract 21," part II, notes that "The present occupant [of the Lloyd house] is a permanent member of the staff who has occupied the house since 1932."

[193] Superintendent's Monthly Narrative Reports, September 1941-December 1945, Record Group 79, Records of the National Park Service, entry 7, Central Classified Files, 1933-49, box 2627, National Archives and Records Administration, College Park, MD; Superintendent's Annual Reports, fiscal year

Visitation at Hopewell Village/French Creek Recreational Demonstration Area dropped from 73,618 people in fiscal year 1942 to 18,230 the following year. Even before the end of World War II, however, visitation began to rise again. Nearly 62,000 visited the area in fiscal year 1945 and nearly 64,000 the next year. Heinrich and NPS administrators began planning for post-war visitation as early as July 1944 when Heinrich completed a study called "Post War Repair and Rehabilitation Program." In December, Heinrich submitted a Project Construction Plan to his supervisors in the regional office.[194] The superintendent and the NPS also sought to deliver the vast majority of the French Creek Recreational Demonstration Area to the Commonwealth of Pennsylvania as a state park, following the prescription for RDAs across the country, and a study was undertaken to determine the boundaries of each. After this study, the area proposed for the National Historic Site was nearly four times the site's original size in order to address interpretive issues and provide a buffer between the historical and the recreational parks. Secretary of the Interior Julius A. Krug approved the transfer on November 25, 1946, and President Harry S Truman followed suit on December 18. When Pennsylvania took over the administration of French Creek State Park in the spring of 1947, Hopewell Village National Historic Site encompassed its current land area, 848.06 acres.[195]

While this reduction of the size of the historic site from its war-time area made it more manageable, it also resulted in the removal from National Park Service control of some resources historically related to the furnace. These include the state park headquarters building, a house perhaps belonging to the Clemens family that appeared in furnace records, and the Wamsher House now used as residence of the state park's superintendent. Traces of the original west head race and charcoal hearth sites and associated trails also are likely to be located in what is now the state park. Two other properties directly related to the furnace were never included in the boundaries of either the RDA or the National Historic Site: the Jones and Hopewell mine tracts. In addition to the mines themselves, both these tracts contained structures related to mining operations. The Jones Mine flooded in the late nineteenth century and is now known as the Jones Millpond. It is privately owned. Hopewell Mine is located on Pennsylvania State Game Lands in Chester County, and the site includes tailing piles, mine pits, charcoal hearth sites, and building ruins.[196]

1941-1945, Record Group 79, Records of the National Park Service, entry 7, Central Classified Files, 1933-49, box 2626, National Archives and Records Administration, College Park, MD; Camp Inspection Report, January 9, 1942, Record Group 35, Records of the Civilian Conservation Corps, entry 115, Camp Inspection Reports, 1933-42, box 181, National Archives and Records Administration, College Park, MD.

[194] Superintendent's Annual Reports, fiscal year 1944, 1946, Record Group 79, Records of the National Park Service, entry 7, Central Classified Files, 1933-49, box 2626, National Archives and Records Administration, College Park, MD; Superintendent's Monthly Narrative Reports, July-December 1944, Record Group 79, Records of the National Park Service, entry 7, Central Classified Files, 1933-49, box 2627, National Archives and Records Administration, College Park, MD.

[195] Glaser, 114-118.

[196] KFS Cultural Resources Group, "Adjacent Lands Study," 8-10.

Heinrich and his limited work force of three people prepared for the post-war historic site in a number of ways. The Navy rest camp was dismantled beginning in the summer of 1946, and the superintendent supervised the dispersal of those buildings and materials. The process was completed by October. The park retained three former CCC buildings around the flagpole of the rest camp for use as park headquarters, a watchman's house, and a utility building. It also retained the structures in the utility area north of the rest camp. In September, workers located and reset 13 concrete markers that had been put in place by the Park Service in 1938 to set the original boundaries of the historic site.[197]

[197] Superintendent's Annual Report, fiscal year 1946; Superintendent's Monthly Narrative Reports, January 1945-December 1946.

CHAPTER VI: THE EVOLUTION OF HOPEWELL FURNACE NATIONAL HISTORIC SITE, 1947-PRESENT

The first decade of Hopewell Village National Historic Site's existence witnessed the gradual definition of the site's boundaries, basic research into the furnace's history, and the stabilization of historic buildings. But although archeologist John C.F. Motz, historical aide Jackson Kemper, and enrollees from the CCC, the ERA, and the WPA had acted as guides to explain the site to visitors since its designation in 1938, a definitive plan for the restoration and interpretation of Hopewell had not been endorsed by the National Park Service when World War II ended.[198] A major impetus for consensus on interpretation and restoration issues was the increase in visitation to all national parks after World War II, when a steady rise in personal income, improved highway systems, and affordable automobiles increased demand for educational and recreational areas nationwide. Hopewell's superintendents during the decade following World War II – Emil Heinrich, Catherine M. Fritz, Russell Gibbs, and James Cass – attempted to deal with rising numbers of visitors while at the same time trying to resolve issues of what the visitors' experience at Hopewell should be. All four superintendents struggled to keep up with both tasks, and it wasn't until the implementation of the Mission 66 program to modernize National Park Service properties that these issues began to be resolved.

Repair and Debate in the Post-War Park

Repairs to historic buildings and structures began even before Pennsylvania had officially accepted, in the spring of 1947, 5,350 acres of the former Recreational Demonstration Area as French Creek State Park. In January 1947, NPS workers dismantled and removed the collapsed walkway previously constructed to provide visitors with access to the top of the furnace stack. A replacement was completed by the end of October. Hopewell Village hired two part-time carpenters in March, and for more than two years thereafter the physical fabric of Hopewell Village National Historic Site received long overdue attention. Most of this work consisted of replacing existing, deteriorated parts of buildings with new material. Wood members were those most often replaced. The superintendent's monthly reports show that during this time rotted door and window frames, window sashes, and porch and interior floor boards and joists were replaced at the Ironmaster's House, the Office-Store, at least two of the Tenant Houses, the Blacksmith Shop, and the Spring House. New steps and a new bridge over the East Head Race were installed at the Ironmaster's House. The Tenant Houses received new porches, and workers either repaired or reshingled the roofs of the Boarding House, the Blacksmith Shop, all three Tenant Houses, and the Spring House. Repair of the Charcoal House in 1951-52 included replacing the plates, rafters, and dormer frames and reshingling the roof. Masonry repair was also undertaken on the foundation of one of the Tenant Houses and a wall of another, on the Boarding House, on the Tenant House Barn, and on the East Head Race retaining walls. The doorway in the Spring House was lowered to its historic position, and a new opening was made in the expanded dairy barn in order to better display the artifacts exhibited there. An office was also established in the barn for Dennis C. Kurjack, who joined the park as its first full-time historian in late June 1947. Plastering was undertaken at the Ironmaster's House and the Blacksmith Shop. Beginning in

[198] Glaser, 137.

September 1947, workers modernized the circa 1856 Nathan Care House along the Birdsboro-Warwick Road for use as employee housing. The work, which took place after a study of the house by Kurjack, included plastering, new downstairs floors, a new chimney for the basement heater, and a new septic tank and sewer line. Fritz, who was employed as a clerk-stenographer but functioned as acting superintendent during at least two periods of the site's post-war history, moved into the Care house in May 1948.[199] A 14-by-50-foot Quonset hut was acquired from the federal government in the summer of 1948; by that fall about half of the building had been erected northeast of the former CCC site.[200]

Kurjack also undertook to check, treat, and renumber the artifacts held at the historic site, beginning in the fall of 1947. Some of the objects were still held at the Ironmaster's House (by now in the basement) in cardboard boxes. About 600 items were in a storage room on the west side of the Office-Store. The artifacts held in the Office-Store were moved to the basement of the barn by the end of 1947. The items rested on open shelving, tables, or on the concrete floor. During excavations of the furnace bank and retaining walls in late 1949 and early 1950, nearly a ton of cast- and wrought-iron pieces were discovered, including a tunnel head plate, lengths of pipe, counterbalances, machinery, fragments of stove plates, weights, spikes, and stirrups. The discoveries led to the hiring of archeologist John Cotter for 20 days in April 1950. Cotter supervised excavations and assigned field numbers to all the artifacts discovered in this area. Further excavations around the furnace walls were undertaken under the direction of Paul Schumacher in June 1951, resulting in the recovery of 336 additional artifacts. Some of Hopewell's artifacts were delivered to Colonial National Historical Park in Jamestown, Virginia, for treatment and cataloging between April 1951 and November 1953.[201]

Hopewell and NPS administrators also set about obtaining rights of way for the state and county roads that passed through the historic site. Obtaining the rights of way had the immediate effect of keeping daily traffic out of the park. Ultimately, the NPS planned to remove hard surfaces from historic roadways and return them to their nineteenth-century courses and surfaces, and archeological and documentary research was undertaken to provide data necessary for accurate reconstruction. By the summer of 1953, only the Birdsboro-Warwick Road remained open

---

[199] Superintendent's Monthly Narrative Reports, January 1947-June 1949, Record Group 79, Records of the National Park Service, entry 7, Central Classified Files, 1933-49, box 2627, National Archives and Records Administration, College Park, MD; Kurtz, 34; Building Files, Maintenance Building, Hopewell Furnace National Historic Site. The superintendent's reports, from which the bulk of this information comes, did not differentiate between the Tenant Houses in describing work accomplished. From May through August 1947, Hopewell was without a superintendent designated by the National Park Service. During that time, the monthly superintendent's reports were submitted by Fritz. Fritz also signed a drawing of the parking lot constructed in 1954 as acting superintendent.

[200] Russell A. Gibbs to Regional Director, August 14, 1948, and November 9, 1948, Record Group 79, Records of the National Park Service, entry 400, Region V, General Correspondence, 1939-52, box 59, National Archives and Records Administration, Philadelphia, PA.

[201] Kurtz, 35-52.

through the site. An entrance road and parking area in the approximate positions of the current road and lot were also planned in 1953, but not completed until a year later. The Birdsboro-Warwick Road was not closed until the summer of 1955. Funding for fiscal year 1956 covered the cost of obliteration of hard surfaces and the restoration of cinder roads within the park after archeological investigations had been conducted.[202] The road restoration project was completed in 1956.[203]

All this work would have to be considered restoration, of course, and it continued even while debate on the time period that the historic site should represent continued. The debate centered around the problem of displaying an industrial site the significance of which resulted from its century-plus span of productivity rather than a single event or a brief period of time. Although the order designating Hopewell Village in 1938 specifically cited the furnace's importance to American colonial history, the appropriate date for restoration had been debated since the visits of Ronald F. Lee and Roy Edgar Appleman in 1935. Nowhere in documents reviewed for this study do National Park Service technical experts or administrators demonstrate that they felt bound by the designation's reference to Hopewell's colonial history. Rather, NPS staff involved with Hopewell were interested in determining as accurately as possible what constituted the site's significance and then the best way to interpret that significance for the public.

Disagreements on both these issues continued, but park staff and NPS officials at the regional and national levels ultimately staked out two positions on these questions. Appleman made the case for restoring Hopewell to a specific period – the first years of the American republic – in his January 15, 1936, proposal for Hopewell's restoration. The historian did not cite the reasoning behind this target date, although his references to Henry Ford's ensemble of historic structures in Dearborn, Michigan, and to the restoration and reconstruction of eighteenth-century buildings in Williamsburg, Virginia, suggest that he was caught up in the then-current drive to recapture in three-dimensional form the early history of the United States.[204] In 1941, Superintendent Lemuel Garrison sketched out the position for representing Hopewell over a longer period. After a

---

[202] E.M. Lisle, Acting Regional Director, to Director, National Park Service, July 24, 1953; A.C. Stratton, Acting Regional Chief of Operations, to Director, National Park Service, August 25, 1954; James Cass to Regional Director, October 14, 1954; Russell A. Apple, to Regional Director, July 25, 1955; J. Dean Stout, Acting Chief, EODC, to Regional Director, August 2, 1955, Record Group 79, Records of the National Park Service, entry 407, Northeast Regional Office, General Correspondence, 1954-1966, box 16, National Archives and Records Administration, Philadelphia, PA; Kurtz, 53-54.

[203] Joseph R. Prentice to Chief, EODC, received August 15, 1956, Record Group 79, Records of the National Park Service, entry 402, Eastern Office of Design and Construction, General Correspondence, 1953-1960, box 6, National Archives and Records Administration, Philadelphia, PA; U.S. Department of the Interior, National Park Service, Regional Design and Construction Division, "Headquarters Development, Part of the Master Plan, Hopewell Village National Historic Site," October 2, 1953, and "Grading Plan of the Headquarters Development, Hopewell Village National Historic Site," March 4, 1954, Philadelphia Support Office, Philadelphia, PA.

[204] Appleman, "Proposed Restoration," 3-5; Glaser, 31.

meeting between Garrison, Alfred Hopkins, archeologist Motz, and Coordinating Superintendent Francis C. Ronalds, Garrison wrote a statement of principles that used 1870 as a stopping date for restoration, allowing the historic site to show the century of growth and change it had undergone. Because research undertaken to that time had concluded that the cold blast technology of the furnace remained basically unchanged between Hopewell's beginnings and 1870, choosing the later date as a stopping point would allow the site to represent its colonial and early republican importance as well as its later significance. Garrison's statement only slightly modified the guiding principles that had been set forth a year earlier in discussions among NPS officials.[205]

Each interpretive stance had its weaknesses. Choosing an early restoration date logically required the demolition of later, although perhaps historic, structures. Choosing a broad time frame meant that certain important aspects of the furnace's history, such as its relation to the American Revolution or its production of stove plates in the second quarter of the nineteenth century, might get slighted.

The debate continued after World War II. A June 6-7, 1950, conference at the park advocated setting the restoration date to the period between 1810 and 1845, when the furnace reached its greatest prosperity. In part this recommendation resulted from research that revealed the extent of the changes that had taken place in the furnace landscape over the 110 years of its existence. A year later, however, at a meeting between regional historian Melvin J. Weig, James Cass, who became superintendent at Hopewell on December 11, 1949, and new Hopewell historian Walter E. Hugins, the restoration date was set at 1883, the date of the furnace's last blast.[206] Part of the difficulty of restoring Hopewell to an early period was the lack of information on the buildings and the landscape at that time. Superintendent Cass, in the introduction to the 1952 Master Plan for Hopewell Village, wrote that such a restoration was "impractical if not impossible" and would result in the demolition of most of the structures then standing. Based on these conclusions, the 1952 Master Plan stated that the goal of development at Hopewell was "to stabilize, restore, and reconstruct the essential features of the area as of its last period of operation." Restoring extant earlier buildings along with those of later date would exhibit, Cass wrote, the "growth of a dynamic industrial organism."[207]

---

[205] Francis S. Ronalds, Coordinating Superintendent, "Memorandum for the Director," May 21, 1941, Record Group 79, Records of the National Park Service, entry 7, Central Classified Files, 1933-49, box 2629, National Archives and Records Administration, College Park, MD; Melvin J. Weig, Thor Borresen, John C. Fisher Motz, Lemuel A. Garrison, "Memorandum for the Regional Director," April 11, 1940, Record Group 79, Records of the National Park Service, entry 81, Central Classified Files, 1936-52, box 89, National Archives and Records Administration, Philadelphia, PA.

[206] Kurtz, 46-48.

[207] James Cass, Superintendent, "Master Plan Development Outline, Hopewell Village National Historic Site, Pennsylvania," February 1952, Hopewell Furnace National Historic Site, 2.

Figure 22 – Blast machinery and water wheel, 1951. (Hopewell Furnace National Historic Site Archives.)

Restoration after World War II proceeded on this general assumption, but some flexibility in interpretation seems to have been allowed. Studies of the Blacksmith Shop, for instance, divided its history into four periods: 1775-1800, 1800-1849, 1849-1883, and 1883-1935. Beginning in the fall of 1949, the building was restored to an appearance similar to that of its first two periods, rather than the third period, which the pre-war guiding principles would seem to have suggested. This restoration resulted in substantial changes to the building's fabric. All four walls were lowered, rafters and plates were replaced, the roof pitch was changed, a vertical window was filled in and a horizontal one restored, and the forge chimney was reconstructed. The CCC-era roof of tar paper and sheathing was replaced with the hand-made tile roof probably used on the shop down to the 1860s.[208] Reconstruction of the water wheel and blast machinery, begun early

[208] James Cass, "Completion Report on the Restoration of the Blacksmith Shop, Hopewell Village National Historic Site," September 28, 1950; James Cass, Superintendent, to Regional Director, Region One, August 21, 1952, Record Group 79, Records of the National Park Service, entry 400, General Correspondence, 1939-1952, box 57, National Archives and Records Administration, Philadelphia, PA.

in 1950 and completed two years later, was based, however, on the forms of those artifacts at the end of the furnace's productive period – that is, on machinery remaining at the furnace when the Federal government purchased the land in 1935. (Figure 22) As work on the water wheel and blast machinery neared completion, restoration began on the West Head Race in order to provide a source of power for the water wheel. It was put in operation during the summer of 1952.[209] It should be noted that the restoration of the Blacksmith Shop, the blast machinery, water wheel, and the West Head Race were based on substantial archeological, architectural, and documentary research conducted both before and after World War II. That is, the bases for these reconstructions may have been sound, but Park Service administrators were not consistent in applying the policy they seemed to have established at that time.

Mission 66 Planning at Hopewell Village

The Mission 66 initiative of the National Park Service evolved in response to the neglect of the national park system during and after World War II. As has been noted, the park system had been expanded in the New Deal programs of President Franklin Delano Roosevelt with the transfer of historic sites formerly administered by the War Department and by the creation of new sites like Hopewell. The expansion was helped by work relief programs such as the CCC and the WPA. With the advent of World War II, those sources of funding and labor ended, and after the war, changes in government priorities limited National Park Service funding even as the cost of labor and use of the parks rose. The park system, designed to accommodate 25 million visitors a year, received twice that many in 1955, while staffing and funding remained close to wartime levels. The parks were publicly and privately criticized, and one writer suggested, in *Harper's* magazine, that the entire system be closed until money could be found to properly maintain it.[210] Hopewell Village was no exception to this situation, drawing a comparison to an "orphan child" in one newspaper article and suggestions that the facility be closed until its restoration was completed.[211]

John Albright and Norman M. Souder, in "Historic Structure Report, the Blacksmith Shop and Wheelwright-Carpenter Shop and Historic Furnishing Study, the Blacksmith Shop, Wheelwright-Carpenter Shop, and Charcoal House, Historical and Architectural Data" (1974), state that the Blacksmith Shop at the time of the report represented the renovation of 1849, which was done in association with the construction of the Anthracite Furnace and began the shop's third period. It is not clear why the authors argue for that date, since Cass's completion report clearly dates the NPS restoration to the second period rather than the third. Albright and Souder do say that their proposed restoration would not change the building in any appreciable way, requiring only the relaying of the tile roof and replacing modern stock window sashes and frames with mortice-and-tenon frames and authentic sashes.

[209] Apple, "Documentation for Historical Base Maps," II-119-II-123; Glaser, 132-140.

[210] National Park Service, *Mission 66: To Provide Adequate Protection and Development of the National Park System for Human Use* (Washington, DC: U.S. Department of the Interior, National Park Service, 1956), 10-11; Sarah Allaback, *Mission 66 Visitor Centers: The History of a Building Type* (Washington, DC: Department of the Interior, National Park Service, 2000), 1-2.

[211] Glaser, 128-129.

National Park Service Director Conrad Wirth later recalled that he began envisioning the ten-year program that became Mission 66 in February 1955 and subsequently sought input from park superintendents and other NPS administrators on how to prioritize system needs. The plan presented to President Dwight D. Eisenhower and to Congress called for $670 million in improvements designed both to facilitate access to natural and historic resources and to conserve them. The eight-point program included funds to construct more overnight accommodations in the park system, to increase access to resources, to upgrade utilities, to provide park staff with adequate accommodations, and to provide protection of natural resources.[212] As passed by Congress and signed into law by Eisenhower, the Mission 66 program provided more than $1 billion over a ten-year period to upgrade National Park Service facilities in time for the 50-year anniversary of the agency's founding in 1966.[213]

As the Mission 66 program was being developed, park superintendents were asked to provide a statement of improvements they felt necessary to make their parks capable of accommodating their current visitor load and to estimate the number of visitors they would receive in 10 years. This request came from Lemuel Garrison, former Hopewell superintendent and at the time chairman of the Mission 66 steering committee.[214] Russell A. Apple, who replaced Hugins as historian at Hopewell and was at this time acting superintendent of the park, produced a "Mission 66 Prospectus for Hopewell Village National Historic Site" in response to Garrison's request. Dated July 27, 1955, the prospectus stated that the restoration plan for the site under the new program was "to restore the iron making facilities to what they were about 1830."[215] When Joseph R. Prentice became Hopewell's superintendent two days after the prospectus was produced, he agreed with the target date, contending that focusing on the last period of the furnace's operation would emphasize aspects of the site – such as the boiler added in 1881 to provide supplemental steam power to the blast machinery – that had very little to do with the most important part of the furnace's history. The focus on the last period of productivity, Prentice felt, meant that certain buildings, such as the Cast House, where the stove plates of Hopewell's most productive period were cast, would be de-emphasized.[216]

Although it is uncertain precisely how park management reached this decision, it would seem that Hopewell staff had arrived at an understanding of the furnace's importance based on research into

---

[212] National Park Service, *Mission 66*, 16-17; Allaback, 3-5.

[213] Barry McIntosh, "Parks and People: Preserving Our Past for the Future," in *The National Park Service: The First 75 Years*, U.S. Department of the Interior, National Park Service, http://www.cr.nps.gov/history/online_books/sontag, 1-2.

[214] Allaback, 3.

[215] Russell A. Apple, "Mission 66 Prospectus for Hopewell Village National Historic Site," Hopewell Furnace National Historic Site, summary – 1.

[216] Glaser, 142-143.

the history of the furnace itself, rather than trying to fit Hopewell into larger patterns of American history, such as its colonial heritage, or specific events, such as the American Revolution. Apple's prospectus laid out a 10-year plan for Hopewell. The 25-page document cited five primary problems that needed to be resolved for the historic site to be fully prepared: 1) restoration of iron-making facilities; 2) restoration of village buildings; 3) fire protection; 4) historical and archeological research; and 5) administrative facilities. Apple discussed each of these problems – setting out, for instance, lists of the buildings to be restored or reconstructed – and offered preferred ways of resolving them. He estimated the levels of staffing and facilities needed, including staff housing, and submitted a plan of interpretation that included two sample tours.[217]

This emphasis on implementing a centralized approach to site development, rather than the piecemeal development necessitated in previous years by lack of labor and funding, is embodied in Apple's *Documentation for Historical Base Maps* (1956). In this document the historian compiled research previously conducted on Hopewell's historic buildings to provide documentation for maps already produced by the NPS's Eastern Office of the Division of Design and Construction. In the introduction to the *Documentation*, Apple pointed out that, unlike previous researchers, he had been able to synthesize documentation gathered from other depositories, oral interviews, archeological information, and the furnace's own record books – putting together in one place research conducted by such men as historian Charles B. Montgomery, CCC worker Elwood Keppley, archeologists Motz and Borresen, historians Appleman and Kurjack, and several others.[218] Although master plans for Hopewell Village had been created and debated since the designation of the National Historic Site in 1938, Mission 66 gave the park the resources with which to carry out the scheme, now based on a target restoration date of 1830.

The Mission 66 Visitor Center

Apple's prospectus called for the construction of an administrative building that combined office space, visitor service facilities, and a museum. In essence, it asked for the building type that has come to symbolize the Mission 66 program: the Visitor Center. As Sarah Allaback points out in her book *Mission 66 Visitor Centers: The History of a Building Type*, these buildings were designed to achieve multiple goals, including control of visitor circulation and the dissemination of information about the parks. As the National Park Service anticipated increased visitation to the parks – 80 million by 1966, most of which would be by automobile – control of circulation became a key goal for the initiative. Control of "visitor flow" helped conserve park resources and increase visitors' enjoyment of parks by curtailing the random travel within park boundaries that the NPS had discovered through experience frequently took place.[219] The need for an

[217] Apple, "Mission 66 Prospectus."

[218] Apple, "Documentation for Historical Base Maps," 2-3.

[219] Allaback, 22-25.

administration building of some type did not surface at Hopewell only with Apple's prospectus, however. Debate on how to house the unit's administrative functions began before the historic site had been designated, when CCC use of the Office-Store resulted in the loss of historic documents. Discussion of "an administration-museum building" took place as early as 1941.[220] Park headquarters, it will be remembered, were moved into roomier quarters in Camp NP-4's technical services building when the CCC vacated that structure during fiscal year 1943.[221] Hopewell's 1952 Master Plan also envisioned a combined visitor services-administration building, and Hugins and Cass prepared an eight-page prospectus justifying its necessity.[222]

As visitor circulation was a primary concern of the Park Service, the location of visitor centers received special attention. Considerations regarding the location included automobile circulation (since NPS planners located each park's major parking lot near its visitor center) and the nature of the resources contained in the park. NPS planners considered three main locations for visitor centers in the park system: 1) at the park entrance, 2) at a location en route to the park's central attraction, and 3) at the central attraction itself.[223] The location chosen for the visitor center at Hopewell Furnace was a ridge just north of the furnace complex and its associated housing and farmland. This location was first envisioned in the early planning for the historic site. A 1937 National Park Service base map for Hopewell shows a proposed entrance road and parking lot in the general location in which they were later built. (Figure 15) The entrance road roughly paralleled the Reading-Coventry Forge Road and ended at the parking area.[224] This location was chosen, according to NPS Landscape Architect Walter H. Sheffield, to provide the visitor with "a comprehensive view" of the village and furnace complex. Coordinating Superintendent Herbert Kahler agreed to the location during the summer of 1939.[225] The location of the entrance road also anticipated the construction of the bypass road (State Route 345) that was built with CCC and WPA labor. The parking lot and a temporary visitor shelter were completed by 1954. During the Mission 66 period, the parking lot was improved, an overflow lot was constructed

[220] Roy Edgar Appleman, "Technical Review (History): Hopewell Village National Historic Site, Drawing HV-2061, 2 sheets, Park Headquarters Building," July 22, 1941, Record Group 79, Records of the National Park Service, entry 400, Region V, General Correspondence, 1939-1952, box 56, National Archives and Records Administration, Philadelphia, PA.

[221] Superintendent's Annual Report, fiscal year 1943, 1.

[222] "Master Plan Development Outline," 1952, 3.

[223] Allaback, 26-28.

[224] U.S. Department of the Interior, National Park Service, "Base Map as of 1937, Part of the Master Plan, Hopewell Village National Historic Site," Hopewell Furnace National Historic Site Archives.

[225] Walter H. Sheffield, Resident Landscape Architect, Memorandum for the Regional Landscape Architect, August 7, 1939, Record Group 79, Records of the National Park Service, entry 400, Region V, General Correspondence, 1939-1952, box 56, National Archives and Records Administration, Philadelphia, PA.

north of the existing lot, and the small shelter was moved to a location near the Schoolhouse ruins to make way for the new visitor center.[226]

As Allaback points out, Modern architecture lent itself readily to the resolution of the complex programmatic aspects of Mission 66 visitor centers and the need to control visitor circulation. The term "visitor center" itself echoes the idea of "shopping center," another multipurpose building type also developed at this time with Modernist planning principles to resolve similar issues of access and control. In addition, Modern architecture, since it made use of concrete and steel – materials that in the post-war world were much cheaper than the natural materials such as wood shingles and fieldstone used in pre-war NPS construction – held out the promise of economical construction. This was considered of primary importance in seeking funds from Congress. Finally, the materials used in Modern architecture, according to Allaback, allowed the complex programs of the visitor centers to be accommodated in low-rise buildings that were designed to remain unobtrusive in the parks themselves, where, after all, the landscape or the cultural resources were the main attractions. The principles of Modernism, therefore, dovetailed with the goals and attitudes of the Mission 66 program.[227]

Hopewell's Visitor Center was designed by Donald F. Benson, a staff architect at the Park Service's Eastern Office of Design and Construction. Benson, who received an award from *Progressive Architecture* for his beach shelters at Coquina Beach, a part of the Cape Hatteras National Seashore,[228] used Modernist principles and materials, such as concrete, steel, and glass, at Hopewell. The vertical-board siding, shingle roof, and low profile of the building make it relatively unobtrusive from within the historic site itself. In addition, the plan of the Visitor Center at Hopewell follows what Allaback calls "Park Service Modern" planning principles. It is sited in relation to an overall "visitor flow" circulation plan, segregates public and administrative areas, emphasizes movement of the visitors through the building from the parking area and into the historic site itself, and centralizes services such as interpretation, information, rest rooms, and

---

[226] KFS Cultural Resources Group, "Cultural Landscape Report," 65-66, 95-97; "Headquarters Development, Part of the Master Plan, Hopewell Village National Historic Site," October 2, 1953; "Grading Plan of the Headquarters Development, Hopewell Village National Historic Site," March 4, 1954; U.S. Department of the Interior, National Park Service, Eastern Office of Design and Construction, "Residence and Headquarters Area, Hopewell Village National Historic Site," January 22, 1958, Northeast Regional Office, Philadelphia, PA (NER-P). Following the current National Register documentation, the "Cultural Landscape Report" states that a parking area and entrance road were constructed in 1954 (65), but that the current main and auxiliary parking areas, as well as the entrance road, were constructed under Mission 66 (95). It appears, however, that the current main parking lot dates from 1954, judging from the drawings cited above. The Mission 66 drawing describes the parking lot as "existing." Parts of the Mission 66-era entrance road follow a slightly different course than the 1954 road but do not seem to constitute new construction.

[227] Allaback, 22-25.

[228] Ibid., 14-15.

administrative offices.[229] The location of the entrance road, parking area, and Visitor Center does, however, significantly influence the visitor's perception of the historic site since visitors must go through or around the Visitor Center to reach the furnace complex – obscuring the comprehensive view of the iron plantation planned during the CCC period.

On May 19, 1957, prior to Benson's design of the Visitor Center, Hopewell historian Robert D. Ronsheim had submitted a 43-page prospectus justifying the park's need for the building. There followed a period of negotiation between Robert P. White, acting chief of the Eastern Office of the Division of Design and Construction, and Hopewell. The EODC and NPS officials in Washington felt that the park's request was too large for its needs and for the project's budget.[230] Revised drawings of the Visitor Center were recommended for approval in August 1957, but because the cost of construction was more than 10 percent above the budget for the building, further approvals were required. Work finally began during the summer of 1958.[231] The Visitor Center was substantially completed in April 1959, when building inspection took place, and was dedicated on June 28.[232]

Apple's Mission 66 prospectus addressed other park needs, such as housing for staff assigned to the rural park and maintenance facilities. He suggested that three residences be created to accommodate the anticipated addition of two full-time employees and the lack of a residence for the full-time historian. One of those residences could be supplied by restoring the Harrison Lloyd House, Apple suggested. The historian also noted that the maintenance buildings currently used by the historic site were old and widely dispersed. He recommended that "unified and modern facilities" should replace these building. [233] Funding was directed to satisfying both of those needs at about the same time that the Visitor Center was under construction. Quarters 98 and 99, designated A and B during the Mission 66 era, were designed in Eastern Office of NPS' Division of Design and Construction early in 1958. Variations on the ranch houses that were popular

---

[229] Ibid., 274.

[230] Robert D. Ronsheim,, "Prospectus for the Hopewell Village, N.H.S. Visitor Center," May 19, 1957; Edward S. Zimmer, Chief, Eastern Office, Division of Design and Construction, to Director, National Park Service, June 3, 1957; Robert P. White, Acting Chief, EODC, to Superintendent, Hopewell Village, June 28, 1957, Record Group 79, Records of the National Park Service, entry 403, Eastern Office of Design and Construction, General Correspondence, 1954-66, box 44, National Archives and Records Administration, Philadelphia, PA.

[231] Daniel J. Tobin, Region V Director, to Chief, EODC, August 23, 1957; Mier Sofair, Project Superintendent, correspondence, 1958, Record Group 79, Records of the National Park Service, entry 409, box 12, National Archives and Records Administration, Philadelphia, PA.

[232] Superintendent's Monthly Narrative Reports, January-June 1959, Record Group 79, Records of the National Park Service, entry 408, Northeast Regional Office, Correspondence, 1954-63, box 1, National Archives and Records Administration, Philadelphia, PA.

[233] Apple, "Mission 66 Prospectus," summary – 4, 8.

Figure 23 – Quarters 99, constructed during the Mission 66 program.
(Robinson & Associates photograph, 2003.)

throughout the United States in the quarter century after World War II, the one-story, three-bedroom houses featured vertical wood siding, low-pitched roofs, banked windows, and attached garages.[234] The maintenance building was constructed of concrete and concrete block over a steel frame. It was intended to contain a fire house, a warehouse, an office, a carpentry shop, artifact storage, and a vehicle maintenance area within its 94-foot length.[235] The residences were completed and occupied by the end of 1958, while the maintenance building was accepted by the park from the contractor on January 15, 1959. (Figure 23) The residences and the cinderblock maintenance building, all three of which are still in use, were built north of the parking area where CCC Camp NP-4 once stood.[236]

[234] U.S. Department of the Interior, National Park Service, Eastern Office, Division of Design and Construction, "Employees' Residence," six drawings, January 22, 1958, NER-P; Virginia and Lee McAlester, *A Field Guide to American Houses* (New York: Alfred A. Knopf, 2003), 479.

[235] U.S. Department of the Interior, National Park Service, Eastern Office, Division of Design and Construction, "Maintenance Building," four drawings, January 22, 1958, NER-P.

[236] Edward S. Zimmer, Chief, EODC, to Superintendent, Hopewell Village, August 2, 1957; Jackson E. Price, Assistant Director, Region V, to Regional Director, December 30, 1957, Record Group

Except for the pump house, the Camp NP-4 buildings were removed at this time. Prior to demolition, the buildings were surveyed and their materials advertised for sale in local papers. The prescient Joseph R. Prentice, who served as Hopewell's superintendent from July 29, 1955, to December 2, 1961, anticipated the future concerns in regards to these resources in his monthly report for July 1960: "Thus passes forever from Hopewell the last vestiges of the Civilian Conservation Corps era. I wonder how many years will pass before this era in American history will attract the attention of historians, archeologists, and other researchers?"[237]

The construction of new buildings and the removal of old ones required new landscaping of the area north of the village (visitor center, parking lots, maintenance buildings, and residences) during the Mission 66 period. Drawings of the work illustrate the nature of NPS' intentions at this time. In addition to the terraces on its north and west sides, the Visitor Center received plantings that included red and white oaks, mountain laurel, and rhododendron, and several of the mature trees on the site were retained. Similar, although sparser, plantings were implemented at the two residences and the maintenance building. In the parking lot area, 130 apple trees were planted to recall the historic orchard that had occupied that area.[238] Plantings were begun for the Visitor Center, the residences, and the maintenance building in April 1960.[239]

None of the Mission 66 resources discussed above are considered to contribute to the significance of the Hopewell Furnace National Historic Site as of the writing of the HRS because they cannot be demonstrated to satisfy National Register of Historic Places Criterion G, which requires exceptional significance for resources less than 50 years old. Allaback points out five ways that an NPS visitor center can satisfy this criteria: 1) award-winning design, 2) award-winning architect for the design, 3) a distinctive design that affected evolution of the visitor center type, 4) an essential part of a Mission 66 park plan that had "extraordinary importance" in the park's development, or 5) association with events or activities of local communities. Hopewell's Visitor Center does not satisfy these criteria. Although Benson won an award for another Mission 66 design, his Visitor Center at Hopewell did not win an award, nor did it, based on Allaback's book, influence the design of other visitor centers. Since the location for the Visitor Center had been recommended early in the park's history and had no bearing on circulation in the park, which was established during the CCC period, the building's actual construction cannot be

---

79, Records of the National Park Service, entry 409, box 12, National Archives and Records Administration, Philadelphia, PA; Superintendent's Monthly Narrative Report, January 1959.

[237] Superintendent's Monthly Narrative Report, July 1960, Record Group 79, Records of the National Park Service, entry 408, Northeast Regional Office, Correspondence, 1954-63, box 2, National Archives and Records Administration, Philadelphia, PA.

[238] U.S. Department of the Interior, National Park Service, Eastern Office, Division of Design and Construction, "Planting Plan (Completion)," two drawings, October 28, 1959, NER-P.

[239] Superintendent's Monthly Narrative Report, April 1960. Although it is clear that the re-established orchard still exists near the parking lot, the extent of remaining Mission 66 plantings is unclear. Neither the "Cultural Landscape Report" nor the Cultural Landscape Inventory document the implementation of the planting plan discussed in footnote 233.

claimed to have had "extraordinary importance" in the park's development. Based on a review of the park's historical documents, especially the draft Administrative History, the Visitor Center does not seem to have been associated with important community events. The Mission 66 Visitor Center incorporates principles of Mission 66 design in its multipurpose use, its materials, and its relationship to the site, and its significance should be reevaluated after it becomes 50 years old in 2009. Included as part of the Visitor Center, in accord with registration requirements published as park of Allaback's study, would be site features associated with the original construction, such as the sidewalks, steps, and patio, and plant materials referred to in the Visitor Center planting plan.

Allaback's discussion of registration requirements also notes that nearby parking lots and site development were integral to the procession into and through a Visitor Center. However, the entrance road and main parking lot at Hopewell Furnace existed prior to the Mission 66 program. Refinements made to both during the program do not constitute construction significant to Mission 66. Both the entrance road and the parking lot have been evaluated as contributing elements of the park's historical development, but their significance derives from their original construction in 1954. None of the drawings of the parking area from the Mission 66 period show the existence of the flagpole now standing at the eastern end of the median strip nor call for its construction. The flagpole would therefore seem to postdate the Mission 66 period and not be considered as a contributing landscape element when the Mission 66 resources become 50 years old.

Very little has been written about aspects of Mission 66 construction beyond the visitor centers, although a report addressing housing, circulation, and other features is now being produced for the Park Service. Extrapolating from Allaback's criteria for visitor center significance, however, it can be understood that none of the other Mission 66 resources at Hopewell Furnace satisfy Criterion G as exceptionally significant for the same reasons that the park's Visitor Center does not satisfy that criterion. Some of the resources, however, clearly represent distinctive aspects of the Mission 66 program. Quarters 98 and 99, for instance, address the Mission 66 goal of providing more housing for park staff, especially in remote locations. The residences also follow the Modernist design principles that inform the visitor centers in their materials, finish, and horizontal forms. Maintenance buildings, on the other hand, have been part of the park's history since the CCC period, and the current maintenance building, although constructed of modern materials, is utilitarian in design. Its relationship to the Modernist design principles exhibited by the Visitor Center and Quarters 98 and 99 is not readily apparent, although its siting as part of Mission 66 development is consistent with Mission 66 planning principles. In summary, while the Mission 66 resources at Hopewell Furnace do not satisfy Criterion G for exceptional significance, they do seem to represent aspects of the guiding principles of Mission 66 and therefore should be reevaluated when they reach 50 years of age and when criteria for evaluating resources beyond the visitor centers have been established.[240]

[240] NPS Northeast Region staff concurred with this evaluation of Mission 66 resources, per electronic mail from Clifford Tobias, November 2, 2004.

Restoration under Mission 66

As previously stated, Apple's Mission 66 prospectus of 1955 stated a restoration date of "about 1830" for the furnace. As research and planning for restoration began, however, the target date became subject to debate once more. In September 1958, the acting chief of the EODC, Harvey H. Cornell, referred to the 1941 report of Garrison, Weig, and others that used 1870 as the cut off date as a reasonable basis for restoration. George A. Palmer, acting regional director, responded to Cornell by saying that the approved Mission 66 prospectus had overridden Garrison's statement, placing the date of interpretation during Hopewell's peak years. Palmer, however, distinguished between "preservation policy" and "interpretation policy." He felt that preservation of actual historic remains, within Hopewell's 1770-1883 period of significance, should outweigh the interpretive focus on the period from 1820-1840. While reconstructions would focus on the period of peak production, "all physical remains within the historic period" would be preserved. Palmer used the Ironmaster's House as an example of this policy. The house "should be restored as nearly as possible to the 'peak period' of the 1840's, insofar as the restoration does not involve removing or altering any part of the structure which dates from before 1883."[241]

Superintendent Prentice responded in October that the debate should never have arisen since the approved Mission 66 prospectus established the period of restoration as 1820-1840. Probably referring to Apple's *Documentation*, Prentice pointed out that research for restoration had begun in 1955, leaned heavily on previous studies, and emphasized the years between 1820 and 1840 as Hopewell's most productive period. This was also the period when cold blast furnaces "ruled supreme and their product was unexcelled" at the national level, according to Prentice. The superintendent was confident that the historic site's buildings, including the ironmaster's house, could be restored to that period.[242] As will be seen, however, the push to restore Hopewell to its 1820-1840 configuration and the preservation policy of retaining historic remains whatever their dates of construction both exerted their influence on the national historic site as it appears today.

Restoration projects under the Mission 66 program were preceded by research reports on individual buildings, often including furnishing studies, and by archeological investigations (although historian Ronsheim complained that much of the archeological work was of short duration and done in a piecemeal fashion). These excavations resulted in the collection of more artifacts, both domestic and industrial, from the furnace's era of operation. The park's collection of artifacts was moved in 1958 to the Mission 66 maintenance building; much of the collection received new accession numbers at this time. The result of this overload of archeological artifacts was the burial of some items recovered between 1962 and 1964 by archeologist Leland Abel in a

[241] George A. Palmer, Acting Regional Director, Region Five, to Chief, EODC, October 3, 1958, National Park Service, WASO, Historical Files, Correspondence, 1958-1965, Washington, D.C.

[242] Harvey H. Cornell, Acting Chief, EODC, to Regional Director, Region Five, September 26, 1958; Joseph R. Prentice to Regional Director, Region Five, October 13, 1958, National Park Service, WASO, Historical Files, Correspondence, 1958-1965, Washington, D.C.; Kurtz, 62-63.

3-foot-square, 4-foot-deep pit behind the spring house.[243] Ronsheim and Earl Heydinger, who came to Hopewell as historian in 1958, were responsible for many of the historical sections of the building research reports, while architect Norman M. Souder provided the architectural data and planned and supervised the restorations themselves.

The earliest restoration work done under the auspices of the Mission 66 program was the recreation of the cluster of frame buildings surrounding the furnace stack. The purpose of these buildings was to store and protect raw materials used in iron-making: the Wheel and Bridge houses, the Connecting Shed, the Charcoal House, and the Cooling Shed. Apple completed a documentary study of the Bridge and Wheel houses and the Connecting Shed on September 28, 1956.[244] In the architectural data section of the 1966 historic structures report for the Charcoal House, architect Souder noted that the restoration of the furnace complex was undertaken in the following order: Furnace, Bridge and Wheel houses, Charcoal (Cooling) Shed, Cast House and Molding Sheds. It would therefore appear that the Bridge House and Connecting Shed (considered part of the Bridge House), were completed slightly before or at the same time as the Wheel House, which was finished by the fall of 1958. Initially, the Connecting Shed reconstruction was attached to a frame addition on the south side of the Charcoal House. When the Charcoal House was restored in 1965-66, this frame addition was removed and an additional bay constructed for the Connecting Shed to join the two structures. The Charcoal House also received a new superstructure and roof (which eliminated the dormer windows considered to be 1880 additions) and had its north windows converted to doors (as were thought to have been present during the furnace's peak period of production).[245]

Some changes from the target restoration date did take place. For example, the roof of the Wheel House had not been connected to the Bridge House until 1879. The reconstruction followed the later configuration because no documents or photographs defined the previous condition.[246] (Figure 5) The stone walls supporting the Wheel House itself had been reconstructed by 1954 to the height they had reached during the furnace's last period of operation. It was thought that the walls had been raised over the course of the furnace's operation due to the continued accumulation of slag in the area.[247] The furnace bank and retaining wall, which support the furnace structures, were also investigated at this time and reconstructed to approximate the conditions of the restoration period. Slag was brought to Hopewell from Joanna Furnace to

[243] Kurtz, 60-69, 78-79. The artifacts were retrieved from this pit and reintegrated into the collection in 1989, although provenience information was lost.

[244] Apple, "Bridge and Wheel Houses." Apple considered the Connecting Shed a part of the Bridge House.

[245] Souder, "Charcoal House"; Riddle, Heydinger, and Souder," Charcoal House-Building No. 9.

[246] Joseph R. Prentice to Regional Director, Region Five, October 13, 1958, National Park Service, WASO, Historical Files, Correspondence, 1958-1965, Washington, D.C.

[247] Hugins, "The Physical History of the Hopewell Furnace Group, 1770-1883," 14-15.

recreate the large slag pile on the south side of the Cast House that would have been a prominent landscape feature during the furnace's peak years of production.[248]

The reconstruction of the Cooling Shed, begun in 1957 and preceded by archeological excavations and documentary research, renewed the question of the period of restoration. Historian Ronsheim concluded that it seemed likely that during the target period for restoration, the shed roof was not tied in to the Charcoal House roof and that a stone wall supporting the shed did not exist. He recommended, however, using the supporting wall and tying the shed roof into the Charcoal House roof since the construction chronology had not been determined absolutely. The reconstruction followed Ronsheim's recommendation. It was not yet finished in July 1958, when Superintendent Prentice requested additional funding to complete the project. Prentice cited the cost of hand-split shingles and the necessary replacement of rotted tie beams and plates in the Charcoal House roof as reasons for the extra funding. The Charcoal House roof collapsed under a heavy snowfall in 1958 and was sustained with temporary supports until it was reconstructed in 1965.[249]

The restoration and reconstruction of the Wheel House, Bridge House, and Cooling Shed were highly visible additions to the furnace complex, but an equally visible modern intrusion into the nineteenth-century atmosphere the National Park Service sought to create was the gambrel-roofed barn. Work on returning the Barn to its historic appearance started in March 1959 with the purchase of stone from a nineteenth-century barn for use in the reconstruction. Archeological investigation of the area around the Barn began in April, and demolition of the modern additions began in June. By August, the old stone work of the Barn became visible for the first time in 30 years, and in October Amish carpenters were hired to start reconstruction.[250] Souder submitted his historic structures report for the Barn in May 1959, outlining the six stages of development the Barn had undergone. He recommended that the Barn be returned to its configuration after the second stage of construction, which he dated to approximately 1840. Another twentieth-century addition, a stone and concrete block silo on the south side, had been removed by the NPS in 1956. The reconstruction also erased changes dating from the period of the furnace's operation, such as the straw house that replaced the Barn's forebay, a frame structure at the southwest corner of the Barn used as a stable, and a corn crib southwest of the stable. Apple had dated these additions to approximately 1870.[251] The reconstruction was completed in April 1961.[252]

---

[248] KFS Cultural Resources Group, "Cultural Landscape Report," 66.

[249] Ronsheim, "Charcoal House and Shed (Bldg. 9)," 18-22; Souder, "Charcoal House," ii; Joseph R. Prentice to Director, Region Five, July 7, 1958, National Park Service, WASO, Historical Files, Correspondence, 1958-1965, Washington, D.C.

[250] Superintendent's Monthly Narrative Reports, January 1959-April 1960, Record Group 79, Records of the National Park Service, entry 408, Northeast Regional Office, Correspondence, 1954-63, boxes 1-2, National Archives and Records Administration, Philadelphia, PA.

[251] Souder, "Village Barn," 2-7.

While the Barn was being reconstructed, Souder, Ronsheim, and Heydinger took up the question of the Office-Store. As with other Hopewell buildings, documentary evidence to date the building was lacking, and in fact the building's use was supplied only by Harker Long, manager during the furnace's last period of operation. Restoration plans therefore relied on an investigation of the building's fabric, which Souder conducted in early 1960. The architect determined that the major alterations to the building were made after 1860 and included raising the roof, changing window and door openings, building a safe into the corner fireplace, and adding brick chimneys. The restoration of the earlier form of the building, which necessitated the removal of those changes, began in July 1960 and was completed by the following April.[253]

By spring 1961, then, much of the furnace complex had been restored or reconstructed. One set of interrelated structures crucial to the interpretation of the furnace to the 1820-1840 period, however, was missing entirely. These were the Cast House, Molding Sheds, and Cleaning Shed, in which Hopewell's molders created the stove plates that had characterized the furnace's operation during its peak period and cleaned and packed them for transport. With Hopewell's transition to pig iron production after 1844, this building complex became less important and had disappeared in the years since the furnace ceased operation. They were reconstructed on archeological and photographic evidence and information gathered from interviews.

Archeological excavations were carried out by Leland Abel, who arrived at Hopewell in February 1962 and began work on the Cast House site in April. (Figure 24) The work revealed the floors and foundation walls of the Cast House and sheds attached to its north and south walls during the 1820-1840 period. The term "Molding Sheds" was used for the structures attached to the sides of the Cast House, although it was considered more likely that the areas were used for pattern making and storage and that molding was done in the Cast House proper. A large quantity of tile fragments was discovered by the archeologists, indicating that the building had a tile roof. Deposits of glass fragments indicated the location of windows. Also discovered were the remains of a previously unknown structure at the front (east) of the Cast House, which was called the Cast House annex or Cleaning Shed. The latter label was conjectural and based on interviews with former employees that noted the existence of cleaning sheds, as well as documentary evidence citing payment for the cleaning of furnace products. Archeological and photographic evidence was used to date the Cast House annex to the 1820-1840 period. Architect Souder made the case for reconstruction of the Cast House, sheds, and annex to the 1820-1840 period, and the buildings

[252] U.S. Department of the Interior, National Park Service, "Completion Report of Construction Project," November 27, 1962, Hopewell Furnace National Historic Site.

[253] Ronsheim, Heydinger, and Souder, "Office and Store"; Benjamin Zerbey, Norman M. Souder, Charlotte Fairbairn, *Historic Structures Report, Part III, Administrative, Historical, and Architectural Data Sections, Office/Store-Building #3*, January 1964, Hopewell Furnace National Historic Site, Historical Data Section, 1-6, Architectural Data Section, i-ii, 1-20.

Figure 24 – Archeological work at the Cast House site, 1962. (Hopewell Furnace National Historic Site Archives, temporary box no. 2.)

were constructed by a crew of Amish carpenters supervised by Christ Beiler, the same crew that reconstructed the furnace barn, in 1964-65.[254] Historical and architectural research, although little archeological investigation, was also conducted prior to restoration of extant furnace employee housing in the village. Tenant House No. 1 received a new roof in 1958 and some restoration was done on the exterior of the building at that time. In 1963, floor joists were replaced on the first

[254] "Completion Report Narrative, Reconstruction and Rehabilitation of Historic Structures, Including Archeological Research," no date, 1-4; Souder, "Cast House and Moulding Sheds," 3-15; Earl Heydinger, *Historic Building Survey Report Cast House, Hopewell Village National Historic Site, Additional Historical Data*, no date, Hopewell Furnace National Historic Site, 1-4; Earl Heydinger, *Historic Structures Report, Historical Data Section, Part III, Cast House and Moulding Shed – Buildings #33 and #37*, September 1966, Hopewell Furnace National Historic Site, 1-4.

floor. After historical research conducted by historian Earl Heydinger, the park contemplated the removal of partitions dividing the rooms on the first and second floor, replacement of rotting structural members, and the removal of ceiling plaster in 1964 so that the building could be added to the self-guided tour of the village.[255] Further work on the house was carried out in 1964-65, including the restoration of a previously undetected partition wall on both the first and second floors.[256] Tenant House No. 2 received similar treatment, receiving exterior restoration in 1958 and 1963. Restoration in 1958 included the removal of a twentieth-century porch. Interior restoration was proposed in 1963 but not carried out.[257] Tenant House No. 3 was converted into quarters for park employees during fiscal year 1958. The exterior of the house remained faithful to its historic appearance in the conversion, and the original plan of the house was retained on the interior – although modern conveniences, such as an updated kitchen, closets, plumbing, heating, and electricity, were installed. The roof and a modern porch were replaced under Superintendent Benjamin Zerbey.[258] Tenant House No. 3 Barn was stabilized in 1959.[259] The northeast window on the first floor of the Boarding House was reopened during the administration of Superintendent Prentice. The building received more attention in January 1963. Masons repointed the foundations and fireplaces and created ventilation ports in the foundations to reduce the humidity that contributed to the decay of the wood members. Carpenters also replaced rotted joists and floor boards. As a result of paint analysis, the building's trim color was changed from barn red to light gray.[260] The north wall of the John Church Stable was reconstructed by mason Russell Bowen in 1958. Other work done on the stable included the replacement of log loft joists, board and batten doors and frames, and window frames. Historically appropriate shutters were placed on the original portion of the Church House in 1965. Heating was installed in the Thomas Lloyd House during fiscal year 1961, but the Harrison Lloyd House was deliberately burned and bulldozed on January 14, 1965, as a result of its ruinous condition.[261]

---

[255] Zerbey and Heydinger, "Tenant House #1."

[256] Heydinger, "Revision of Documentation for Historical Base Maps," 31; Hopewell Furnace, List of Classified Structures website.

[257] Souder, "Tenant House No. 2, i; Heydinger, "Revision of Documentation for Historical Base Maps," 32; Hopewell Furnace, List of Classified Structures website.

[258] Souder, "Tenant House #3," 1-5; Heydinger, "Revision of Documentation for Historical Base Maps," 32-33.

[259] Heydinger, "Revision of Documentation for Historical Base Maps," 6.

[260] Heydinger, "Revision of Documentation for Historical Base Maps," 27-28; Zerbey, "Boarding House – Bldg. #24," 1-4.

[261] Superintendent's Monthly Narrative Reports, November-December 1960, Record Group 79, Records of the National Park Service, entry 408, Northeast Regional Office, Correspondence, 1954-63, box 2, National Archives and Records Administration, Philadelphia, PA; Heydinger, "Revision of Documentation for Historical Base Maps," 29-30, 46; *Completion Report, Narrative, Rehabilitation of Tenant Houses Nos. 1 and 2 and Houk House Stable,* Hopewell Furnace National Historic Site Library, 3-4.

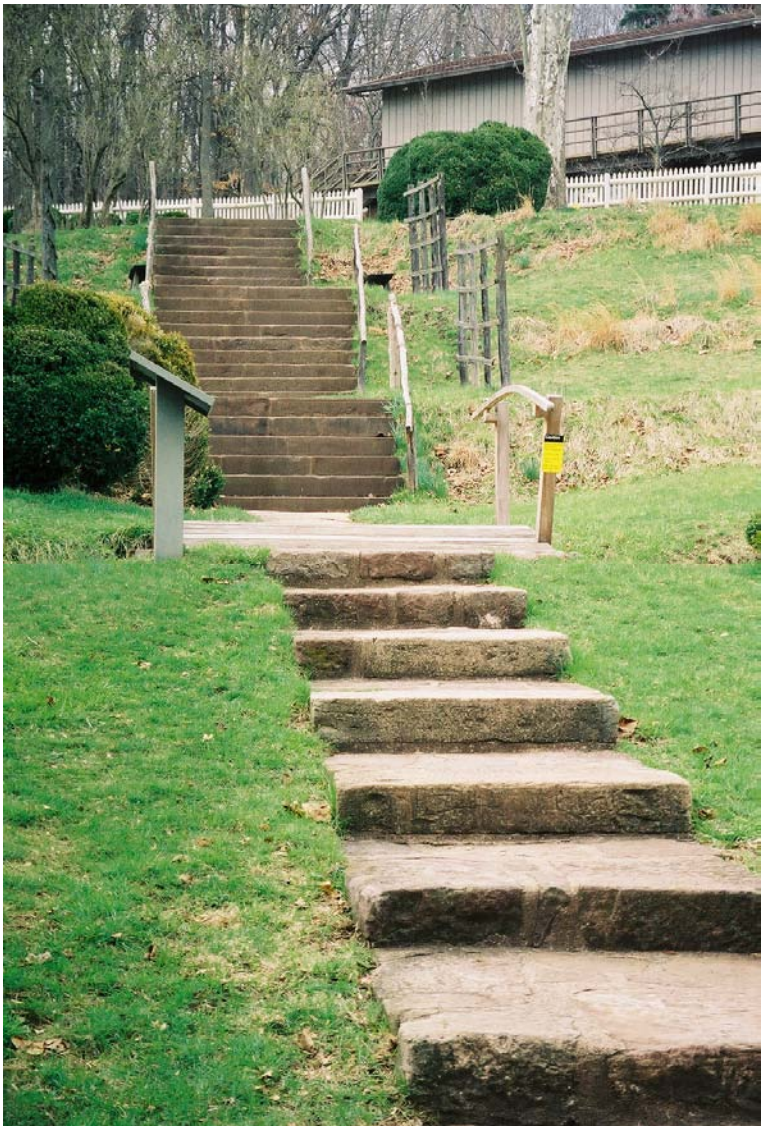

Figure 25 – Stone steps (foreground) north of the Ironmaster's House.
(Robinson & Associates photograph, 2003.)

Measured drawings of the Ironmaster's House were made by the Historic American Buildings Survey in 1957, and electric heat was installed in 1959. The interior was extensively repaired in 1958 to support sagging ceilings. Souder produced a historic structures report for the Ironmaster's House in 1965, but, other than the installation of the heating system, no more than maintenance was done to the building during the Mission 66 period. (The front porch was

stabilized in 1963, the kitchen porch and yard wall in 1965.) This inaction resulted from Souder's recommendation that the building should be restored to its configuration during the 1820-1840 period, which would have required the removal of the building's front porch, the long windows on the north elevation of the first floor, Victorian woodwork on the interior, the upstairs bathroom, and the stepped gable of the south elevation.[262] The decision not to return the Ironmaster's House to its 1820-1840 condition shows that the preservation policy cited by Palmer in 1958 – itself a remnant of the discussions of restoration policy dating back to the late 1930s – maintained some influence through the Mission 66 period.

Much work was also accomplished on the grounds of the house during this period. John Cotter discovered the foundations for the stone terrace walls and for the Ice-Summer House in archeological excavations conducted in 1958, and the bridge over the East Head Race as it passed through the grounds was constructed by this date. (The East Head Race's course through the garden had been opened in 1955.) The Smoke House was restored in 1960, and the garden steps and walks were re-established between 1955 and 1960 to create a tour path from the parking area and Visitor Center to the Ironmaster's House and furnace complex. In July 1961, a log walk was constructed between the Bake Oven and the Spring House to provide safe movement of visitors and to control erosion. In 1963, Superintendent Benjamin J. Zerbey, who served Hopewell from January 21, 1962, to March 20, 1965, supervised the reduction of the 11-inch risers of the garden steps by adding steps taken from Joanna Furnace. (Figure 25) Zerbey also placed four benches along the tour path and had a flagstone walk constructed from the front porch of the Ironmaster's House to the Birdsboro-Warwick Road. Violet Care, who lived in the house from 1916 to 1935, had recalled the presence of the flagstones, which had been crushed and used by the Civilian Conservation Corps in their work in French Creek Recreational Demonstration Area. Archeologist Abel also discovered the location of the privy from the restoration period. The concrete floor of the Spring House was removed in 1963-64, and the building was completely restored in the last months of 1965. The restoration included new woodwork and new stone gable ends.[263]

The Mission 66 program for the development of the national historic site addressed the furnace landscape in addition to its buildings. The steps west of the Office-Store were reconstructed under Superintendent Prentice between 1955 and 1958, and the risers were lowered for the safety of visitors.[264] Prentice positioned a demonstration charcoal hearth beyond the Blacksmith Shop, but the hearth was relocated for visitor convenience in 1961 in its current location near the Charcoal

[262] Dessauer, 1, 9-19; Heydinger, "Revision of Documentation for Historic Base Maps," 8.

[263] Superintendent's Monthly Narrative Reports, August 1961, Record Group 79, Records of the National Park Service, entry 408, Northeast Regional Office, Correspondence, 1954-63, box 3, National Archives and Records Administration, Philadelphia, PA; Hopewell Furnace, List of Classified Structures website; Heydinger, "Revision of Documentation for Historic Base Maps," 9, 22-24, 34, 42, 48.

[264] Heydinger, "Revision of Documentation for Historic Base Maps," 47.

House.[265] After the Visitor Center and parking lot were constructed, an apple orchard was planted east of the parking area, approximating the historic location of the furnace's orchard.[266] French Creek Bridge was rebuilt in 1963 by mason Russell Bowen. Archeology conducted by Abel in 1962-63 uncovered a stone bridge that crossed the original course of French Creek. This bridge was restored in 1965. Regrading took place around the Blacksmith Shop in 1965 to help with drainage at the Cast House.[267] The cemetery wall at Bethesda Church was restored in 1965.[268] Although Mission 66 established the 1820-1840 period as Hopewell's focus, some of the remains of the furnace's later period were stabilized and retained at this time rather than removed. These included the Anthracite Furnace northwest of the furnace complex, which dated from 1853 and represented the beginning of the decline of Hopewell and other cold blast furnaces. It was stabilized in 1963-64. Also stabilized at that time were the ruins of the Charcoal Kilns. Only the westernmost kiln was known before archeological investigation by Cotter in 1961. The Ore Roaster ruins near the furnace bank were also stabilized, as were the Carpenter-Wheelwright Shop remains near the south corner of the Cast House and Molding Sheds. Archeologist Abel uncovered a stone wheel pit within the bounds of the Wheelwright-Carpenter's Shop during his 1963 archeology, but research and oral interviews indicated that Hopewell did not hire its own wheelwright until after the period of restoration.[269]

With funding and direction from the Mission 66 program, Hopewell Village National Historic Site finally achieved some measure of the restoration sought for it 30 years previously when Mang, Lee, and Appleman first envisioned the park. Although debate continued as to whether imperatives for interpretation or preservation would guide each restoration or reconstruction project, and some historians such as Ronsheim lamented the lack of detailed archeological study to support some projects, by 1966 Hopewell Village represented, in three-dimensional form, the cold blast iron-making furnace complex known as Hopewell and its accompanying village as it might have looked during the second quarter of the nineteenth century.

After Mission 66

The Mission 66 program had funded the research and development of Hopewell Village National Historic Site, but not all the planned projects were undertaken, nor did archeology and documentary research answer all the questions raised by the furnace's remains. Specifically, the Schoolhouse, which dated from the period of interpretation, had been planned for reconstruction

[265] Ibid., 37.

[266] KFS Cultural Resources Group, "Cultural Landscape Report," 121.

[267] Heydinger, "Revision of Documentation for Historic Base Maps," 11-12.

[268] Ibid., 7.

[269] KFS Cultural Resources Group, "Cultural Landscape Report," 66; Heydinger, "Revision of Documentation for Historical Base Maps," 1-3, 19-20, 35, 51.

in the Mission 66 prospectus, but that work had not been accomplished.[270] In archeological investigations of the site by Gary Wheeler Stone in 1967 and 1968 and by Emma Lapansky in 1969, the floor plan, original floor level, the location of the door and three windows, and evidence of floor joists were discovered. Lapansky stated that the purpose of her research was to set the stage for reconstruction, but the work never took place.[271] As Leah Glaser points out in her administrative history of Hopewell Furnace, this may have been due to a growing consensus that reconstruction should not be a preferred preservation practice. Glaser points to injunctions against reconstruction promulgated by *With Heritage So Rich*, the book produced by a committee of local, state, and national government officials that influenced the creation of the National Historic Preservation Act of 1966. She also notes NPS policies that sought to restrict reconstruction in the national parks. In 1968, for instance, the National Park Service issued policies for areas of historic significance under its jurisdiction that allowed reconstruction only when a structure considered crucial to the interpretation of the site was entirely missing and if sufficient information existed to reconstruct it accurately at its original location. Despite the ongoing research, the Schoolhouse likely did not meet those criteria.[272]

Discouragement of reconstruction did not end the drive to learn more about Hopewell's history, however. Between 1967 and 1971, the historic site secured funding for archeological investigations at Tenant Houses 1 and 2, the Smoke House, the area surrounding the Cast House (looking for evidence of a cleaning shed, which was not found), and the Spring House. This work revealed, among other things, information that expanded the park's understanding of the iron plantation landscape and the lives of its inhabitants. Archeology at Tenant House No. 1, for instance, uncovered evidence of three episodes of fencing and two garden plots. Archeologists dated artifacts discovered at the site to the 1830s and 1840s. Further archeological work was undertaken at Tenant House No. 1 in 1980.[273] Archeologist Edward F. Heite located dozens of charcoal hearth sites, as well as the sites of colliers' huts in research prepared in 1988-89.[274] The excavations considerably increased the size of the artifact collections at Hopewell Furnace. Garry Wheeler Stone's excavations at Tenant House No. 2 alone recovered 1,200 artifacts. The size of the collection (10,000 items in 1966) resulted in efforts to catalog and treat the collection in the early 1970s. This task was undertaken by Dr. Charles Tremer from Muhlenberg College in 1973. Tremer discovered that the collection had been accessioned with two separate systems and that

---

[270] Apple, "Mission 66 Prospectus for Hopewell Village National Historic Site," summary – 2.

[271] Lapansky, 1; Kurtz, 82-83.

[272] Glaser, 175-177. See also Barry McIntosh, "To Reconstruct or Not to Reconstruct: An Overview of NPS Policy and Practice," *CRM Bulletin* 13:1 (1990), 5-7, 14.

[273] Kurtz, 81-84; Blades and Campana.

[274] Heite, "Report of Archaeological Surveys in Two Tracts" and "Report of Archaeological Surveys on 198 Acres."

Figure 26 – The Ironmaster's House, renovated in 1980-81.
(Robinson & Associates photograph, 2003.)

some of the artifacts had been separated from their original accession groups and mixed with others as a result of their relocation from one storage area to another. [275]

Perhaps the most important research work undertaken after the Mission 66 program concluded focused on the Ironmaster's House. Although the house had received much attention during the period of NPS management, a consensus on its restoration and interpretation had not been reached by the end of the Mission 66 program. As has been mentioned, the proposal of Norman M. Souder to return the house to its appearance during the period of interpretation had been rejected by NPS officials. This stance was reaffirmed by the Mid-Atlantic Region office in 1975. In 1977, the Ironmaster's House was recommended for major treatment procedures, generating both a historic structure report and archeological investigations. The historic structure report essentially confirmed Souder's previous report and organized specifications for the building's restoration. The archeology showed that the grades at the west and northeast sides of the house had been raised considerably since the period of interpretation through the construction of the west porch and the east and south wings. The grade at the time of the archeology study represented approximately the grade present circa 1870, after alterations to the Ironmaster's

[275] Kurtz, 82-90.

Figure 27 – Bethesda Church, renovated in 1982. (Robinson & Associates photograph, 2003.)

House had been concluded. The treatment, which included structural reinforcement as well as restoration, was completed in November 1980.[276] (Figure 26)

The Blacksmith Shop was rehabilitated in 1975, following a historic structure report and a furnishing study completed in August 1974 by Souder and Historian John Albright. This work generally entailed repair and replacement of deteriorated wooden members rather than any major changes. A fire consumed the Blacksmith Shop in 1980, however, leaving only the exterior walls standing. The blacksmith shop was reconstructed in 1981.[277] Other buildings also received attention during the 1970s. Bethesda Baptist Church, still being used by a local congregation, was rehabilitated in 1974-75. The Park Service replaced collapsed floor joists, replastered the ceiling, repaired or replaced pews, repainted the interior, and installed storm windows and heaters. In 1982, the park began restoration of the church's exterior and cemetery wall. The work included window restoration, replacement of the nonhistoric roof, stabilization of the cemetery

[276] Dessauer, 1-10; Audrey R. Marie, *Archeological Investigations of the Ironmaster's House, Hopewell Village National Historic Site, Pennsylvania* (Denver, CO: U.S. Department of the Interior, National Park Service, Denver Service Center, 1984), 1-7.

[277] Albright and Souder, "Blacksmith Shop," 87-88; Hopewell Furnace, List of Classified Structures website.

wall, and the replacement of its cement coping with one constructed of wood.[278] (Figure 27) The ruins of both the Schoolhouse and Greenhouse were stabilized in 1977.[279]
Also during the 1970s, the park replaced the CCC-era reservoir with a new 50,000-gallon tank, and placed telephone and electrical cables in the village underground while removing utility poles. Other buildings and structures, previously preserved, restored, or reconstructed, required additional attention as the result of deterioration caused by time or natural forces. The East Head Race was damaged by Hurricane Agnes in 1972, but was not repaired until 1984. This work was performed by members of the Youth Conservation Corps, which had a building constructed as its headquarters in 1978 east of the road from the maintenance area to the utility area. The water wheel, originally reconstructed in 1952, was reconstructed again in 1987.[280] The Charcoal House roof was replaced between October 1989 and September 1990, the Connecting Shed roof during fiscal year 1999. The Charcoal Kiln ruins were stabilized that same year.[281]

On September 19, 1985, the historic site's name was changed to Hopewell Furnace.[282]

Collections at Hopewell Furnace

Due to the long history of the furnace itself, the energetic early efforts of Hopewell partisans such as Apple, Kemper, and Motz to collect material related to the site's history, and the multiple archeological excavations conducted, Hopewell Furnace accumulated large collections of artifacts, objects, furnishings, and archives. The archeological artifacts include industrial objects as well as smaller domestic implements. They were recovered both in formal excavations and through informal gathering by park staff. [283] Although documents reviewed for this study do not question the informational value of the artifacts recovered at Hopewell Furnace, there has been some question as to the significance of the collection according to National Register standards. James Kurtz contended, in his draft report, *The History of Artifact Curation at Hopewell Furnace National Historic Site*, that the lack of a consistently implemented collection management plan (which resulted from the sheer number of archeological studies, management turnover, changes in interpretive and management focus, chronic lack of funding, difficulties of storage, and other

[278] Glaser, 207-210; Hopewell Furnace, List of Classified Structures website. The LCS dates the restoration to 1985.

[279] Glaser, 187.

[280] Lewis and Hugins, 71; Glaser, 187, 227; "Hopewell Furnace," 7:4-7, 13.

[281] Building Files, Maintenance Building, Hopewell Furnace National Historic Site.

[282] For a discussion of the circumstances surrounding the change in the historic site's name, please see Leah Glaser's administrative history of Hopewell Furnace.

[283] *Hopewell Furnace National Historic Site Collection Management Plan*, U.S. Department of the Interior, National Park Service, Northeast Museum Services Center, Boston, Mass., February 1998, 11-13.

factors) destroyed the integrity of the archeological collections at Hopewell Furnace.[284] The lack of integrity would preclude contributing status, according to National Register standards. The park's *Collection Management Plan* states, however, that most of the difficulties with the collection were resolved in a recataloging of the artifacts that took place between 1989 and 1991 (after Kurtz' report), and asserts that the Hopewell collections "contribute to the significance of the park under Criterion D of the National Register." [285] The archeological collections include field notes, negatives, slides, field catalogs, and diaries associated with archeological investigations, as specified by National Park Service Cultural Resource Management Guideline NPS-28. [286]

Also of potential significance are Hopewell's archival and manuscript collections, which include two main types of documents: 1) eighteenth- to twentieth-century documents related to Hopewell Furnace itself and 2) records related to the management of park resources. Within these two primary groups are letters, business correspondence, furnace records, architectural drawings and plans, maps, photographs, and printed material. The first category of records offers insight into the history of the furnace itself and of the iron industry in the United States. The second group provides data related to the country's efforts in the last three quarters of the twentieth century to preserve its early history.[287]

The first group includes, according to the park's *Collection Management Plan*, Hopewell Furnace records (1804-46), Farmers Mill records (1837-38), E. & G. Brooke Land Company documents (1744-1944), HOFU Deposit Records archives (1802-88), and the Hopewell Furnace Manuscript Collection (1740-1934). These records are "place-related and Service-controlled" as required by Cultural Resource Management Guideline NPS-28 and therefore should be considered as contributing to the historic site for the information they provide, like the buildings and artifacts in the park, about Hopewell Furnace itself and the American iron industry. Included in these contributing documents would be whatever maps and photographs were acquired with the collections. [288]

National Park Service records, however, should be considered noncontributing. This evaluation is based on the description of these documents in the *Collection Management Plan*, which notes that their dates span the period from 1936 to the present and that related records are not stored in

---

[284] Kurtz, 97-98.

[285] *Collection Management Plan*, 8.

[286] National Park Service, "NPS-28, Cultural Resource Management Guideline," effective date June 11, 1998, http://www.cr.nps.gov/history/online_books/nps28, Appendix Q:5.

[287] *Collection Management Plan*, 18-28.

[288] "NPS-28, Cultural Resource Management Guideline," Appendix Q:5.

Figure 28 – The Bally Building, location of Hopewell's artifacts and archives. (Robinson & Associates photograph, 2003.)

one location. While extremely valuable to an understanding of the park's development, these documents do not constitute discrete collections related to a particular time period or a particular aspect of park history. Rather, they are working documents that witness the ongoing challenge of managing and interpreting the park's resources. As described by the *Collection Management Plan*, they do not have integrity either of location or of type, and many of them are less than 50 years old and therefore do not meet National Register criteria. The Joseph Walker Papers and the Library Vertical Files can be considered noncontributing for the same reasons. [289]

Furnishings at Hopewell include all the items on display at buildings open to the public: domestic items, such as furniture, tableware, and kitchenware; implements used in the production of iron and the casting of iron products, such as flasks and molds; and manufactured products in the Office-Store. Some of these items undoubtedly are specifically associated with Hopewell Furnace, such as the Brooke family furnishings purchased by J.C.F. Motz in 1941. Others are period pieces or reproductions purchased for display in the buildings open to the public. Furnishing plans were prepared for some of the buildings open to the public; others were

[289] *Collection Management Plan*, 26-27. NPS Northeast Region staff concurred with this evaluation, per electronic mail from Clifford Tobias, November 2, 2004.

furnished with no prepared plan. The *Collection Management Plan* declines comment on the significance of the overall collection, although it categorizes different types of furnishings according to their importance (site-specific historic furnishings, period pieces, reproductions). The management plan also notes that old inventories for the items displayed in each building exist, but that it is no longer clear which items in the furnishings collection are site-specific to Hopewell and which are not. [290] For this reason, the furnishings collection currently cannot be said to be constitute a contributing element of the site according to National Register standards due to its lack of established integrity. It should be noted, however, that accurate inventories of the site's furnishings would provide the basis for establishing integrity and reassessing the status of the furnishings collection.

As early park staff members understood, transportation of people, raw materials, and finished products at Hopewell during its period of production was mainly accomplished by horse-drawn vehicles. Motz and other staff members searched the area for charcoal wagons, carts, and other vehicles for display at the park, and Motz also purchased Edward Brooke's carriage collection, even though it was used entirely in Philadelphia. The collection of vehicles at Hopewell today consists of carriages and sleighs without connections to Hopewell, wagons constructed during the Civilian Conservation Corps period at Hopewell with historic hardware, a charcoal wagon and ore carts constructed based on examples at other furnaces, and other generic wagons. The park's *Collection Management Plan*, while noting the importance of the vehicles, especially those reconstructed using historic hardware, in setting the historic scene, contends that these vehicles are not historically significant as a group and are therefore not considered contributing elements of the historic site. The vehicles potentially associated with the CCC, however, might justify reevaluation in the future, should their link to the CCC be definitively established. Although it dates the reconstructions to circa 1940, the *CMP* does not definitively assign the work to the Civilian Conservation Corps and also notes that "records are a little unclear." No documents were discovered during research for the HRS that confirmed or denied CCC participation in producing the vehicles. Further research, along with analysis of the vehicles themselves, could establish the link between some of the vehicles in Hopewell's collection and the CCC, providing grounds for them to be considered a contributing collection. [291]

Over the course of the historic site's history, these collections were housed in a number of different locations, including the Ironmaster's House, the Barn, the Office-Store, the Quonset hut, the CCC Block House, the Visitor Center, and the Maintenance Building as the restoration process proceeded. Furnishings and household items are on display in the furnace buildings open to the public. [292] In 1990, the Bally Building, named for the manufacturer of the prefabricated structure, was built on the site of the CCC mess hall near the Maintenance Building. (Figure 28)

---

[290] *Collection Management Plan*, 3-4, 39; James Kurtz, *Hopewell Furnace National Historic Site: Scope of Collection Statement*, 1990, Hopewell Furnace National Historic Site, 5.

[291] *Collection Management Plan*, 58-59.

[292] Kurtz, 85-90; Glaser, 273-277; *Collection Management Plan*, 1-4.

The collections were reviewed, reorganized, and recatalogued from 1989 to 1991. Except for those items on display in the Visitor Center or in the historic site's buildings, Hopewell's collections are stored today in the Bally Building.[293]

[293]"Hopewell Furnace," 7:13; Glaser, 277; *Collection Management Plan*, 8.

RECOMMENDATIONS FOR FURTHER RESEARCH

Hopewell's administrators have been diligent in pursuing numerous avenues of research relating to the operation of the furnace, and the research material gathered by the park is voluminous. Attention has centered around the furnace itself and, to a lesser extent, the village. The Historic Resources Study has highlighted five areas which would benefit from further research: 1) Civilian Conservation Corps archeological resources at the site of Camp SP-7/NP-4; 2) furnishings original to the furnace; 3) vehicles reconstructed by the CCC using hardware salvaged from original vehicles; 4) log houses throughout the site; and 5) house sites outside the village.

CCC Archeological Resources

A large amount of information is available on the CCC at Hopewell Furnace, and the location of camp buildings and activities is generally known. At the time of the writing of the HRS, however, no definitive study of CCC archeological resources had been undertaken. As has been pointed out, Edward F. Heite suggested that these resources held potential significance, but the scope of his study precluded in-depth research. Before the contributing/noncontributing status of these resources can be determined, a focused archeological survey must occur.

Hopewell Historic Furnishings

The park's *Collections Management Plan* points out the value of the historic furnishings collected during the site's history, while at the same time noting the lack of the integrity of the collection overall due to the addition of numerous reproductions and the absence of definitive furnishings plans for Hopewell's historic buildings. Research into the documentation that does exist, along with analysis of the furnishings themselves, could re-establish Hopewell's historic furnishings as a contributing collection.

Reconstructed Vehicles

The *Collections Management Plan* states that the National Park Service reproduced vehicles used at Hopewell Furnace using hardware salvaged from existing vehicles. Although it dates the reconstructions to circa 1940, it does not definitively assign the work to the Civilian Conservation Corps and also notes that "records are a little unclear." No documents were discovered during research for the HRS that confirmed or denied CCC participation in producing the vehicles. Further, the *CMP* considers the park's vehicles as a single collection, not differentiating vehicles potentially associated with the CCC with other vehicles held by the park. Further research, along with analysis of the vehicles themselves, could establish the link between some of the vehicles in Hopewell's collection and the CCC, providing grounds for them to be considered a contributing collection.

Log Housing

Numerous log houses existed on furnace property, including at least three in the village (the house Sally Care Boone grew up in and two cited by Apple near the Schoolhouse). Research for this study has suggested that as many as half the houses in the area in which Hopewell Furnace is located may have been constructed of wood. None of these resources exist today above ground, and the topic has received little or no attention from Hopewell's historians and administrators other than Apple's *Documentation for Historic Base Maps*. An investigation of log housing at Hopewell, through review of documentary evidence and archeological excavations, would help to expand an understanding of the lives of Hopewell's employees.

House Sites Outside the Village

Documentary references to dwellings like the John Church and Thomas Lloyd houses and the Brison, Woodlot, and Harrison Lloyd house sites were addressed by Apple's *Documentation for Historic Base Maps*. It appears that some historical research was also carried out on the John Church House prior to its conversion to employee quarters. However, archeological investigations of these buildings seem not to have been undertaken. While the Church and Thomas Lloyd houses have been altered in the renovation process and modern ground disturbances may have made archeological excavations near the houses themselves difficult, the location of outbuildings has not been attempted. The significant remains of outbuildings at the ruins of the other houses outside the village also have the potential to provide information about the farmsteads surrounding the furnace and their contributions to plantation life.

ANNOTATED BIBLIOGRAPHY

The following sources consulted in creating the Historic Resource Study for Hopewell Furnace National Historic Site have been annotated with reference to their value to an interpretation of the historic site.

Published Sources

Ashmead, Henry Graham. *History of Delaware County, Pennsylvania.* Philadelphia: L.H. Everts & Co., 1884, 81. Reproduced on the Delaware County History website, http:// www.delcohistory.org/ashmead/ashmead/htm.

Ashmead presents a thorough history of the area that became Delaware County, from the initial visits of Europeans in the early seventeenth century to the Civil War. The book also includes individual chapters on social and geographical aspects of the county, as well as histories of the individual boroughs and townships.

Ball, Berenice M. *Chester County & Its Day*. West Chester, PA: Chester County Day Committee of the Women's Auxiliary Chester County Hospital, 1970.

Ms. Ball's book is a history of Chester County Day beginning in 1935.

Bining, Arthur C. *Pennsylvania Iron Manufacture in the Eighteenth Century.* Harrisburg, PA: Pennsylvania Historical Commission, 1938.

Bining's book is the source for most of the other discussions of charcoaled-fueled, cold-blast furnace technology reviewed for this study. His explanations of the technology and its variations are easily understood, and he convincingly conveys a sense of the overall landscape of the furnace. Bining's discussion contextualizes Hopewell Furnace's place in the larger picture of Pennsylvania iron manufacture

Clemensen, A. Berle. *Delaware Water Gap Preliminary Historic Resource Study.* Denver, CO: U.S. Department of the Interior, National Park Service, Denver Service Center, September 1996. National Park Service, Northeast Regional Office, Philadelphia, PA, Cultural Resources Management Files. (NPS, NER-P, CRM Files.)

Clemensen's study contains general geological and historic information relevant to Hopewell Furnace in the context of Pennsylvania's development.

Cutler, Phoebe. *The Public Landscape of the New Deal*. New Haven, CN: Yale University Press, 1985.

Although intended as an analysis of the impact of New Deal programs on the American landscape, Cutler's book also provides background on programs such as the Resettlement Administration and the Recreational Development Area program.

Dessauer, Peter F. *Historic Structure Report, Architectural Data Section: The Ironmaster's House, Hopewell Village National Historic Site.* Denver, CO: U.S. Department of the Interior, National Park Service, Denver Service Center, August 1984.

This historic structure report incorporates archeological data uncovered in 1978 investigations into Norman M. Souder's 1964 report, outlines a program of restoration and rehabilitation, and reports on work done to implement that program. Drawings of the evolution of the house, as well as of planned work, are included. This document does not deal with the grounds of the ironmaster's house.

Downey, Dennis B., and Francis J. Bremer. *A Guide to the History of Pennsylvania*. Westport, CN: Greenwood Press, 1993.

The authors present bibliographic essays on Pennsylvania history, plus a brief survey of archives and manuscripts repositories. Most of the essays are purely bibliographic, but a few also present an outline of Pennsylvania history.

Fairbairn, Charlotte J. "Hopewell Village Lands Traced Back to the Penns." *Historical Review of Berks County* 19:1 (1963), 139-143.

Fairbairn conducted courthouse research to try to resolve questions of the history of the ownership of the lands that became Hopewell Furnace. She is chiefly concerned with the tracts on which the ironmaster's house and the furnace complex were built, although she also traces the transactions by which the furnace was acquired by the Buckley and Brooke families.

Fletcher, S.W. *Pennsylvania Agriculture and Country Life, 1840-1940.* Harrisburg, PA: Pennsylvania Historical and Museum Commission, 1955.

The second volume of Fletcher's study – the first covered the years between 1640 and 1840 – traces agricultural changes impelled by advancing technology in farm machinery, transportation, storage, and agricultural science. Generalizations may not be entirely applicable to Berks and Chester counties. However, since those two counties were major participants in the expansion of the dairy industry during this time, Fletcher's two chapters on this subject are especially relevant to an understanding of the use of Hopewell lands between the close of the furnace and acquisition by the Federal government.

Fox, Cyrus T., ed. *Reading and Berks County, Pennsylvania, a History.* 3 vols. New York: Lewis Historical Company, 1925.

Although it focuses on the city of Reading, this title also gives general information, including topographical and geological data, on the county itself. One chapter discusses the iron industry in the county but is mostly a list of furnaces and forges and the dates of their operations, along with some statistical information.

Gordon, Robert B., and Patrick M. Malone. *The Texture of Industry, an Archaeological View of the Industrialization of North America*. New York: Oxford University Press, 1994.

Gordon and Malone describe the geographical, political, and technological influences on the development of industry in the United States, providing background against which to compare the development of iron-making at Hopewell Furnace. The book also provides a sense of industrial landscapes as they were experienced by those people living and work in them.

Guenther, Karen. "Religion in an Iron-Making Community: Bethesda Baptist Church and Hopewell Village." *Pennsylvania Folklife* 35:2 (Winter 1985-86), 75-79.

Guenther mines the minutes of the Philadelphia Baptist Association to discover information on the day-to-day life of the church. She presents the story chronologically, weaving stories of the ministers and parishioners into her narrative. The article also provides historical context for the church.

Horvath, Arlene. "Vernacular Expression in Quaker Chester County, Pennsylvania: The Taylor-Parke House and Its Maker." In *Perspectives in Vernacular Architecture*, II, Camille Wells, ed., 150-160. Columbia, MO: University of Missouri Press, 1986.

The author concentrates her analysis on the Taylor-Parke House and whether or not it can be considered as an expression of "Quaker" architecture or represents adaptations of other cultures. It therefore has little influence on a discussion of Hopewell's architecture.

Hosmer, Charles B., Jr. *Preservation Comes of Age: From Williamsburg to the National Trust, 1926-1949*, 2 volumes. Charlottesville, VA: Preservation Press, 1981.

Based on research at the National Archives, Hosmer charts the history of preservation work at Hopewell Furnace. He begins with the "discovery" of the furnace ruins by Ronald F. Lee and discusses the various debates at the site and within the Park Service on the best way of preserving and interpreting the iron-making complex and the village.

Kashatus, William C. *Just Over the Line: Chester County and the Underground Railroad*. West Chester, PA: Chester County Historical Society, 2002.

This publication is a catalog that accompanied an exhibition at the Chester County Historical Society and contains photographs of the objects displayed in the exhibition. The context for the Underground Railroad is also addressed, and the book contains a number of appendices related to the abolitionist movement in Chester County. *Just Over the Line* does not, however, seek to place individuals and places involved in Chester County's Underground Railroad within the larger network of agents and depots in this system and therefore does not shed light on the role Hopewell area resources may have played in the railroad.

Kauffman, Henry J. *Architecture of the Pennsylvania Dutch Country, 1700-1900.* Lancaster, PA: Henry J. Kauffman, 1992.

This survey divides the architecture of Pennsylvania Dutch Country into 50-year periods that are perhaps too neat and do not allow for the overlap of style and building techniques that comprise most architectural traditions. Brief overviews provide a general understanding of the periods discussed, and the entries are illustrated with both photographs and plans.

Klein, Philip S., and Ari Hoogenboom. *A History of Pennsylvania.* University Park, Pa: Pennsylvania State University Press, 1980.

Klein and Hoogenboom have written a comprehensive general history of Pennsylvania, relating its early settlement and the foundation of the colony to developments in Europe. The authors keep social, political, religious, economic, and ethnographic issues in view while fleshing out the chronological narrative.

Kniffen, Fred B., and Henry Glassie. "Building in Wood in the Eastern United States: A Time-Place Perspective." In *Common Places: Readings in American Vernacular Architecture*. Dell Upton and John Michael Vlach, eds., 159-181. Athens, GA: University of Georgia Press, 1986.

This book attempts to correct misunderstandings concerning the nature of log construction in the American colonies and the young United States and makes the final point that wood construction – both log and timber frames – was the most widespread kind of building during American migration between 1790 and 1850. The authors conclude that the Pennsylvania German horizontal log construction techniques used in southeastern Pennsylvania were the most influential of this period, spreading south and west with German and Scotch-Irish settlers.

Kurjack, Dennis C. "Joseph Whitaker of Hopewell Furnace." *Historical Review of Berks County*, January 1949, 49-54, and April 1949, 66-73.

Using a variety of primary sources, Kurjack traces what is known of the life of Joseph Whitaker, a defector from the British army during the American Revolution who worked for most of his life as a woodcutter employed by Hopewell Furnace. Whitaker fathered two sons who became successful in the iron industry, but Kurjack's article concentrates on the life of their father, shedding light on the struggles of the many who labored in the iron industry.

Lanier, Gabrielle M., and Bernard L. Herman. *Everyday Architecture of the Mid-Atlantic: Looking at Buildings and Landscapes*. Baltimore: Johns Hopkins University Press, 1997.

The authors caution at the outset of this volume that the breadth of their survey oversimplifies the origins and changes in mid-Atlantic architecture over time and that their chronology is a broad generalization. Given that restriction, the book provides a useful regional context against which to compare the domestic and agricultural structures at Hopewell Furnace, highlighting similarities

with buildings in some other locations (Piedmont Maryland and Delaware), and differences with others (Chesapeake Bay area).

Lewis, W. David, and Walter Edward Hugins. *Hopewell Furnace: A Guide to Hopewell Village National Historic Site, Pennsylvania*. Handbook 124. Washington, DC: U.S. Department of the Interior, National Park Service, 1983.

Lewis and Hugins provide a concise history of iron-making in the United States and of Hopewell Furnace. The book is illustrated with photographs and drawings to provide visual references to the explanatory text. The third part of the publication is a guide for visitors to the historic site.

Long, Harker A. *A Short History of the Hopewell Furnace Estate in Union Township, Berks County*. Reading, PA: Reading Eagle Press, n.d.

This book is a brief general history of the furnace by Long, who had lived and worked there since the late 1860s. It provides valuable oral traditions about the furnace but is undocumented.

Montgomery, Morton L. *History of Berks County in Pennsylvania*. Philadelphia: Everts, Peck & Richards, 1886.

This large volume (1,204 pages) is a very thorough account of Berks County to the time of publication and contains maps and illustrations. Most of the information specific to the Hopewell Furnace area has been incorporated into later works, such as Joseph Walker's *Hopewell Village: The Dynamics of a Nineteenth-Century Iron-Making Community*.

Morrison, Hugh. *Early American Architecture from the First Colonial Settlements to the National Period.* New York: Dover Publications, 1987.

Although in general Morrison provides a good overview of American building, including both vernacular and architect-designed structures, his treatment of Pennsylvania is limited. He concentrates on the Philadelphia area during the Georgian period and thereafter. The book therefore has little to say about vernacular construction in the colony.

Nash, Gary B., and Jean R. Soderlund. *Freedom by Degrees: Emancipation in Pennsylvania and Its Aftermath.* New York: Oxford University Press, 1991.

Nash and Soderlund discuss the influences that inspired and the impacts of the gradual abolition of slavery in Pennsylvania. The book takes pains to broaden the scope of this discussion beyond the work of Quakers in the state. The study is useful for its background information on the creation of the Underground Railroad.

Noble, Allen G. *Wood, Brick & Stone,* The North American Settlement Landscape, volume 2, *Barns and Farm Structures.* Amhert, MA: University of Massachusetts Press, 1984.

A good background study on different kinds of farm structures, their ethnic origins, and their development in the United States, this book is well illustrated with photographs and drawings. Buildings of Pennsylvania are well represented. The book discusses construction methods and their ethnic origins as well as the diffusion of different kinds of structures.

Noble, Bruce J., Jr. "Evaluating Historic Mining Resources: A National Register Perspective." *CRM* 12: 2 (1989): 1-4.

Noble discusses the need to relate a variety of resources to their historic context in assessing the significance of industries, such as mining (or by extension iron-making), that have a significant landscape component. He borrows from archeological studies to offer a framework by which accurate assessment of industrial landscapes can be made and cites two National Register bulletins that might also be helpful.

Nolan, J. Bennett, ed. *Southeastern Pennsylvania, a History of the Counties of Berks, Bucks, Chester, Delaware, Montgomery, Philadelphia and Schuylkill.* 3 vols. Philadelphia: Lewis Historical Publishing Company, 1943.

This book is composed of numerous essays on each of the counties. Each county receives a general history, as well as more focused accounts of different aspects of the counties' histories, such as religious groups or, in the case of Chester County, the iron industry. The essays do not include footnotes and are, in general, antiquarian rather than scholarly. Volume 3 contains biographies of various inhabitants.

Paige, John C. *The Civilian Conservation Corps and the National Park Service, 1933-1942: An Administrative History*. Washington, DC: U.S. Department of the Interior, National Park Service, 1985. http://www.cr.nps.gov/history/online_books/ccc.

This on-line version of Paige's 1985 report outlines the work of the CCC for the National Park Service. As its scope is national, the work is organized in broad categories, such as "Establishment" and "Accomplishments." Individual sites are mentioned only to represent the general trends within the CCC work. The book also devotes space to the background of the enrollees and camp life. Page numbering starts over with each section.

Pendleton, Philip E. *Oley Valley Heritage: The Colonial Years, 1700-1775.* Birdsboro, PA: Pennsylvania German Society, 1994.

Pendleton addresses all aspects of the colonial history of the Oley Valley, which lies north of Hopewell Furnace, and includes Birdsboro. Settlement patterns, aspects of the economy, and social history are among the topics the book covers. Most valuable for the study of Hopewell Furnace is Pendleton's discussion of the vernacular architecture of the area. The author evaluates construction techniques, house types, ethnic variations, the influence of Palladianism, and farm and industrial buildings. Axonometric plans of the the buildings are contained in an appendix. His analysis helps create an architectural context for the buildings at the furnace.

Pitt, Thomas A., compiler. *History and Progress of Chester County*. West Chester, PA: Commissioners of Chester County, 1962.

The main use of this small volume is the list of dates that the townships were created.

Schiffer, Margaret Berwind. *Survey of Chester County Pennsylvania, Architecture: 17th, 18th, and 19th Centuries.* Exton, PA: Schiffer Publishing Limited, 1976.

This book surveys existing buildings – mainly houses and churches – in Chester County. It is documented with photographs, and there is an appendix that contains floor plans for some buildings. Text is provided for each entry, but there is little general discussion or analysis of the buildings illustrated, nor an overview of Pennsylvania architecture of the period. Schiffer also includes information gleaned from tax lists that suggest the variety of building materials in the county.

Schwartz, Sally. *"A Mixed Multitude": The Struggle for Toleration in Colonial Pennsylvania*. New York: New York University Press, 1987.

Schwartz is concerned with the difficulties faced by colonists of Pennsylvania in establishing and maintaining the religious toleration set as a goal by colony founder William Penn. The book does not specifically address the issue of toleration in Berks or Chester counties, but offers a general overview of the colonial period in Pennsylvania.

Scogna, Kathy M. "The Birth of a County – 1752." *Historical Review of Berks County*. http://www.berksweb.com/histsoc/articles/berks1752.html.

This article tells, in a non-scholarly way, the story of the creation of Berks County in 1752 from Lancaster, Chester, and Philadelphia counties.

Stilgoe, John R. *Common Landscape of America, 1580 to 1845*. New Haven, CN: Yale University Press, 1982.

Stilgoe's scope is the variety of everyday landscapes in the United States. One of his discussions covers iron plantations. While there is little specific information about Hopewell Furnace, the book does provide historical background against which to compare Hopewell's development.

Switala, William J. *Underground Railroad in Pennsylvania.* Mechanicsburg, PA: Stackpole Books, 2001.

Switala compiles information derived from nineteenth-century publications on the Underground Railroad in Pennsylvania and provides maps of the various routes used. The three main routes through Pennsylvania provide the framework for discussions of the segments of these routes. The book briefly addresses the routes that involved the Hopewell area, including Mount Frisby A.M.E. Church.

Upton, Dell, ed. *America's Architectural Roots.* New York: Preservation Press, 1986.

This books contains brief discussions of ethnic backgrounds detectable in building types, floor plans, and construction techniques in American buildings. The generality of the discussion, however, makes it of little value in relation to the buildings at Hopewell Furnace.

Waddell, Louis M. "Berks County: Diamond of the Schuylkill Valley." *Pennsylvania Heritage* 17:4 (1991), 4-11.

This article is a general, popular history of the county, drawn from scholarly histories such as those by Fox, Montgomery, Nolan, and Walker.

Walker, Joseph E. *Hopewell Village: The Dynamics of a Nineteenth-Century Iron-Making Community*. Philadelphia: University of Pennsylvania Press, 1967.

By far the most comprehensive book on the furnace and village, *Hopewell Village* discusses the major aspects of the complex's history and development. In addition to discussing the history of iron making and the growth and decline of Hopewell Furnace, Walker is one of the few authors to attempt to describe the lives of the community's inhabitants.

Unpublished Sources

Fleck, Robert Keith. "The Impact of Southeastern Pennsylvania Forges and Furnaces' Ordnance Production upon the American War Effort." Master's thesis, Kutztown State College, 1983.

Fleck concentrates on the ordnance production of seven ironworks located in southeastern Pennsylvania, including Hopewell Furnace. His sources of information were the National Archives in Washington and Philadelphia and the state archives in Harrisburg. In addition to the text, numerous charts represent production by year and ordnance type. Detailed production numbers for individual furnaces are not given, nor are production totals from other states provided, since Fleck's research showed they were not available in secondary sources.

Funnell, Charles E. "The Elusive Ordnance of Colonel Bird." Philadelphia, PA: U.S. Department of the Interior, National Park Service, Mid-Atlantic Region, March 1976. NPS, NER-P, CRM Files.

In a 1975 National Park Service study, John Luzader concluded that no cannon used in the American Revolution were produced at Hopewell. Using new evidence discovered in various archives, Funnell addresses Luzader's objections point by point and concludes that cannon were, in fact, produced at Hopewell and that those cannon were used on two frigates in the Continental Navy.

Jacox, Diann L., and Joseph Lee Boyle. National Register of Historic Places Inventory - Nomination Form, "Hopewell Furnace National Historic Site." Washington, D.C.: Department of the Interior, National Park Service, August 30, 1985.

The National Register documentation describes the historic site and its resources. Its discussion of the site's significance relies on its relation to Mark Bird's contributions to the American Revolution, as well as Hopewell's importance to the iron-making industry in the United States. The nomination summarizes the involvement of the CCC and the National Park Service in the village's restoration.

Jones, Lawrence H. "The Restoration of the Furnace Group at Hopewell Village National Historic Site." Honors Thesis, Princeton University, April 15, 1981.

In addition to outlining the history of the restoration of the entire complex, Jones discusses the reasoning behind the restorations building by building. He derives his discussion from many of the National Park Service documents and correspondence cited elsewhere in this bibliography.

National Register of Historic Places Inventory - Nomination Form. "North Warwick Historic and Archaeological District." Department of the Interior, National Park Service, February 24, 1995.

This document generally discusses and describes archeological resources in the lands adjacent to Hopewell Furnace. It contains some information relating to the prehistoric inhabitation of the area, as well as descriptions of historic resources such as charcoal hearths and colliers' huts.

O'Bannon, Patrick W., and William R. Henry, Jr. National Register of Historic Places Inventory - Nomination Form. "Emergency Conservation Work (ECW) Architecture in Pennsylvania State Parks: 1933-1942, Thematic Resources." Department of the Interior, National Park Service, 1983.

O'Bannon and Henry outline ECW architecture in Pennsylvania and generally describe its background and current resources. The nomination outlines the significance of the work nationally and at the state level. Two historic districts identified in the nomination include resources in adjacent French Creek State Park.

Szczgiel, Bonj. "The Recreation Demonstration Area Program of the New Deal." Master's thesis, Pennsylvania State University, Spring 1992.

Szczgiel describes the philosophical background of the RDA program and provides some information on the relation of Pennsylvania projects to the national program.

Appendices

APPENDIX A:
NATIONAL PARK SERVICE
LIST OF CLASSIFIED STRUCTURES

	LCS ID	Park	Preferred Structure Name	Structure Number
1.	000680	Hopewell Furnace National Historic Site	Anthracite Furnace Ruin	011
2.	000681	Hopewell Furnace National Historic Site	Ironmaster's Bake Ovens	016
3.	000683	Hopewell Furnace National Historic Site	Blacksmith Shop	006
4.	000684	Hopewell Furnace National Historic Site	Boarding House	024
5.	000686	Hopewell Furnace National Historic Site	Nathan Care House	025
6.	000688	Hopewell Furnace National Historic Site	Charcoal House	009
7.	000690	Hopewell Furnace National Historic Site	Charcoal Kilns Ruin	039
8.	000691	Hopewell Furnace National Historic Site	Furnace Complex	007
9.	000692	Hopewell Furnace National Historic Site	East Head Race	032
10.	000693	Hopewell Furnace National Historic Site	West Head Race	111
11.	000695	Hopewell Furnace National Historic Site	Ironmaster's House	001
12.	000697	Hopewell Furnace National Historic Site	Thomas Lloyd House	071
13.	000698	Hopewell Furnace National Historic Site	Office and Store	003
14.	000699	Hopewell Furnace National Historic Site	Schoolhouse Ruin	018
15.	000700	Hopewell Furnace National Historic Site	Ironmaster's Spring House	017
16.	000702	Hopewell Furnace National Historic Site	Tail Race	110
17.	000703	Hopewell Furnace National Historic Site	Tenant House No. 1	019
18.	000704	Hopewell Furnace National Historic Site	Tenant House No. 2	020
19.	000705	Hopewell Furnace National Historic Site	Tenant House No. 3	021
20.	000707	Hopewell Furnace National Historic Site	Wheelwright Shop Ruin	035
21.	006821	Hopewell Furnace National Historic Site	Ironmaster's Greenhouse Ruin	013
22.	006822	Hopewell Furnace National Historic Site	Ironmaster's Smoke House	041

	LCS ID	Park	Preferred Structure Name	Structure Number
23.	006823	Hopewell Furnace National Historic Site	Furnace Barn	002
24.	006825	Hopewell Furnace National Historic Site	Ore Roaster Ruin	034
25.	006826	Hopewell Furnace National Historic Site	John Church House	027
26.	006827	Hopewell Furnace National Historic Site	John Church Barn	028
27.	006828	Hopewell Furnace National Historic Site	Nathan Care Barn	026
28.	006829	Hopewell Furnace National Historic Site	Bethesda Baptist Church	079
29.	006830	Hopewell Furnace National Historic Site	Bethesda Baptist Church Cemetery Wall	079A
30.	006831	Hopewell Furnace National Historic Site	Bethesda Baptist Church Carriage Shed	080
31.	006832	Hopewell Furnace National Historic Site	Bethesda Baptist Church Privy	081
32.	006835	Hopewell Furnace National Historic Site	Birdsboro-Warwick Road	115
33.	006836	Hopewell Furnace National Historic Site	Reading-Valley Forge Road	116
34.	006837	Hopewell Furnace National Historic Site	1804 Road	117
35.	006838	Hopewell Furnace National Historic Site	1825 Road	118
36.	006839	Hopewell Furnace National Historic Site	1809 Road	119
37.	012113	Hopewell Furnace National Historic Site	Furnace Bank and Retaining Wall H	008
38.	017267	Hopewell Furnace National Historic Site	Thomas Lloyd Wagon Shed	071A
39.	022829	Hopewell Furnace National Historic Site	Tenant House No. 3 Barn	023
40.	081433	Hopewell Furnace National Historic Site	Ironmaster's Yard Wall	001A
41.	081434	Hopewell Furnace National Historic Site	Ironmaster's Garden Fence	001B
42.	081435	Hopewell Furnace National Historic Site	Baptism Creek Picnic Shelter	122
43.	081436	Hopewell Furnace National Historic Site	Woodlot CCC Spring House	088
44.	081437	Hopewell Furnace National Historic Site	Woodlot House Ruin	076
45.	081440	Hopewell Furnace National Historic Site	Harrison Lloyd Stone Walls	073
46.	081442	Hopewell Furnace National Historic Site	1772 Road	114

47.	081443	Hopewell Furnace National Historic Site	Harrison Lloyd Blacksmith Shop Ruin	072
48.	081444	Hopewell Furnace National Historic Site	Thomas Lloyd Spring House	087
49.	081445	Hopewell Furnace National Historic Site	Boarding House Pump and Well Cover	024A
50.	081446	Hopewell Furnace National Historic Site	French Creek Bridge	115B
51.	081447	Hopewell Furnace National Historic Site	Birdsboro-Warwick Road Bridge	115A
52.	081448	Hopewell Furnace National Historic Site	Nathan Care Field Stone Wall	025A
53.	081449	Hopewell Furnace National Historic Site	Nathan Care Boundary Stone Wall	025B
54.	081450	Hopewell Furnace National Historic Site	Mule Stable Ruin	083
55.	081451	Hopewell Furnace National Historic Site	Cedar Pasture Fence	004
56.	081452	Hopewell Furnace National Historic Site	Tenant House No. 3 Fence	021A
57.	081453	Hopewell Furnace National Historic Site	Tenant House No. 1 Walkway	019A
58.	081454	Hopewell Furnace National Historic Site	Hearth Road Trace	121
59.	081455	Hopewell Furnace National Historic Site	Thomas Lloyd Stone Walls	071C
60.	081456	Hopewell Furnace National Historic Site	Brison House Ruin	055
61.	081457	Hopewell Furnace National Historic Site	Private Road to Dam	112
62.	081458	Hopewell Furnace National Historic Site	Private Charcoal House Turn-Around	113
63.	081459	Hopewell Furnace National Historic Site	Thomas Lloyd Farm Lane	071B
64.	081460	Hopewell Furnace National Historic Site	John Church Retaining Walls and Steps	027A
65.	081461	Hopewell Furnace National Historic Site	Ironmaster's Kitchen Yard Wall	001C
66.	081462	Hopewell Furnace National Historic Site	Mark Bird Lane Culvert	029
67.	081463	Hopewell Furnace National Historic Site	East Head Race Retaining Wall	032A
68.	081581	Hopewell Furnace National Historic Site	John Church Driveway Culvert	027B
69.	081613	Hopewell Furnace National Historic Site	Bethesda Church Cemetery Gravestones	079B
70.	233758	Hopewell Furnace National Historic Site	Lenape CCC Spring House	088.B
71.	233800	Hopewell Furnace National Historic Site	Brison Field Wall & Foundation Ruin	055.A

	LCSID	Park	Preferred Structure Name	Structure Number
72.	233842	Hopewell Furnace National Historic Site	Harrison Lloyd Barn Ruin	074
73.	234902	Hopewell Furnace National Historic Site	Harrison Lloyd Entrance Road Trace	044A
74.	261966	Hopewell Furnace National Historic Site	Charcoal Hearths	123
75.	264599	Hopewell Furnace National Historic Site	Harrison Lloyd Farm Bank Barn Ruin	074.A
76.	264615	Hopewell Furnace National Historic Site	Harrison Lloyd Worm Fence Ruins	074.B

APPENDIX B:
CULTURAL LANDSCAPE RESOURCES LIST
KFS CULTURAL RESOURCES GROUP
1997

APPENDIX C:
LIST OF CONTRIBUTING
AND NONCONTRIBUTING RESOURCES

Following this introduction is a comprehensive list of 132 resources at Hopewell Furnace National Historic Site. It has been compiled from site visits conducted by Robinson & Associates and from the following sources:

- Russell A. Apple, *Documentation for Historic Base Maps, Hopewell Village National Historic Site*, Washington, D.C.: U.S. Department of the Interior, National Park Service, 1956.

- *Hopewell Furnace National Historic Site Collection Management Plan*, U.S. Department of the Interior, National Park Service, Northeast Museum Services Center, Boston, Mass., February 1998.

- Hopewell Furnace National Historic Site, List of Classified Structures website, maintained by the National Park Service, http://www.hscl.cr.nps.gov/reports.

- Diann L. Jacox and Joseph Lee Boyle, National Register of Historic Places Inventory - Nomination Form, "Hopewell Furnace National Historic Site," Washington, D.C.: U.S. Department of the Interior, National Park Service, August 30, 1985.

- KFS Cultural Resources Group, *Cultural Landscape Report, Hopewell Furnace National Historic Site*, prepared for the National Park Service, Northeast Region, Philadelphia, Pa., December 1997.

- John Milner Associates, *Hopewell Furnace National Historic Site, Archeological Overview and Assessment* (draft), prepared for the National Park Service, Northeast Region, Philadelphia, Pa., November 2004.

- National Park Service, *Cultural Landscapes Inventory: Hopewell Furnace Landscape*, Hopewell Furnace National Historic Site, 2003.

- Patrick W. O'Bannon and William R. Henry, Jr., National Register of Historic Places Inventory – Nomination Form, "Emergency Conservation Work (ECW) Architecture in Pennsylvania State Parks: 1933-1942, Thematic Resources," Washington, D.C.: U.S. Department of the Interior, National Park Service, 1983.

Robinson & Associates also reviewed historic structures reports and other National Park Service documents to compile this list. Contributing or noncontributing status for archeological sites were taken directly from the *Cultural Landscape Report* and the draft *Archeological Overview and Assessment*. Evaluation of these resources may change or be supplemented by the final archeological overview and assessment study.

Resources were evaluated as contributing or noncontributing using the guidelines set forth in *How to Apply the National Register Criteria for Evaluation* (Washington, D.C.: U.S. Department of the Interior, National Park Service, 1990, revised 1997). These guidelines outline and discuss criteria for significance as well as integrity of resources. Generally speaking, Hopewell resources attain their significance under Criteria A and C. Criterion A covers resources associated with patterns of events and historic trends. Criterion C addresses design and construction. Some already evaluated archeological sites at Hopewell satisfy Criterion D, which covers real and potential informational value of ruins and below-ground resources. National Register Criteria Consideration E, which addresses reconstructed resources, also applies at Hopewell. Reconstructed resources must be accurately reconstructed in a suitable environment, and be part of a restoration master plan to be considered contributing. To evaluate Mission 66 construction at Hopewell Furnace, Robinson & Associates applied Criteria Consideration G, covering properties less than 50 years old, and standards established in Sarah Allaback's *Mission 66 Visitor Centers: The History of a Building Type* (Washington, D.C.: U.S. Department of the Interior, National Park Service, 2000). Resources of this type must prove exceptional significance to be considered contributing to this historic district.

Of the 132 resources in this list, 95 are considered contributing. These include 40 structures, 32 buildings, 16 sites, and 7 small-scale features, objects, or collections of objects. Noncontributing resources total 34, including 16 structures, 9 small-scale features, and 9 buildings. Three archeological sites have been labeled "to be determined" due to the lack of definitive evaluation in existing studies. Some resources currently considered noncontributing should be re-evaluated when conditions warrant. These resources include those associated with Mission 66 and collections that require further research before a change in status can be made.

* indicates a change in status evaluation from 1985 National Register documentation.
** indicates a change in status evaluation from *Cultural Landscape Report*.
*** indicates resources that should be re-evaluated when conditions warrant.

I. BUILDINGS

Name	Date	Level	Status
Furnace complex	1771-1883		
furnace stack	ca. 1771, 1828-29 (restored 1938-41)	N/S/L	contributing
cast house	ca. 1828-29 (reconstructed 1964-65)	N/S/L	contributing
cleaning shed	ca. 1828-29 (reconstructed 1964-65)	N/S/L	contributing
bridge house	ca. 1828-29 (reconstructed ca. 1958)	N/S/L	contributing
wheel house,	1879 (reconstructed 1958)	N/S/L	contributing
including water wheel,	ca. 1805 (reconstructed 1987-88)		
blast machinery	ca. 1818 (restored 1950-52)		
Office-Store	ca. 1771, ca. 1860-70 (restored 1960-61)	N/S/L	contributing
Village Barn	ca. 1771-1840 (reconstructed 1959-61)	N/S/L	contributing
Boarding House	ca. 1771-1830,ca. 1830-1870	N/S/L	contributing
Ironmaster's House	ca. 1773, ca. 1825, ca. 1830, 1867, 1870 (restored 1980-81)	N/S/L	contributing
Blacksmith Shop	ca. 1775-1883 (restored 1949, 1975, reconstructed 1981)	N/S/L	contributing
Bethesda Baptist Church	1782 (restored 1974-75, 1982)	N/S/L	contributing
Charcoal House	ca. 1800 (restored 1965-66)	N/S/L	contributing
Cooling Shed	ca. 1800 (reconstructed 1957-58)	N/S/L	contributing
Ironmaster's Spring House	1806-08	N/S/L	contributing
Thomas Lloyd House	1807-08 or 1813-14, ca. 1820	N/S/L	contributing
Thomas Lloyd House Wagon Shed	ca. 1820	N/S/L	contributing
Tenant House No. 1	ca. 1820-1850 (restored 1958-65)	N/S/L	contributing
Tenant House No. 2	ca. 1820-1850 (restored 1958-63)	N/S/L	contributing
Ironmaster's Bake Ovens	ca. 1823, ca. 1851	N/S/L	contributing

Name	Date	Level	Status
Bethesda Baptist Church Carriage Shed	1827 (restored 1955)	N/S/L	contributing
Tenant House No. 3	ca. 1840-1860 (altered 1958)	N/S/L	contributing
Tenant House No. 3 Barn	ca. 1840-60	N/S/L	contributing
John Church House	ca. 1845 (altered 1940, "preserved" 1990-91)	N/S/L	contributing
John Church House Barn	ca. 1845 (restored 1958)	N/S/L	contributing
Nathan Care House	ca. 1856 (rehabilitated 1947-48)	N/S/L	contributing
Nathan Care House Barn	ca. 1858	N/S/L	contributing
Ironmaster's House Smoke House	post-1867	N/S/L	contributing
CCC Pump House	1935	N/S/L	contributing*
Baptism Creek Picnic Shelter and Concession Building	1936	N/S/L	contributing*
John Church House garage	1940	N/S/L	contributing*
CCC Oil House	1941	N/S/L	contributing*
CCC Block Building	1941	N/S/L	contributing*
Quonset Hut	1948		noncontributing
Visitor Center	1958-59		noncontributing***
Maintenance Building	1958-59		noncontributing***
Quarters 98	1958		noncontributing***
Quarters 99	1958		noncontributing***
Butler Building	1975		noncontributing
Youth Conservation Corps Building	1978		noncontributing
Collier's Hut	1980		noncontributing*
Bally Building	1990		noncontributing

II. STRUCTURES

Name	Date	Level	Status
1757 Road (Reading-Coventry Forge Road)	1740, 1757, 1772 (restored 1956)	N/S/L	contributing

Name	Date	Level	Status
East Head Race	ca. 1771 (restored 1930, 1955, 1984)	N/S/L	contributing
East Head Race retaining wall	ca. 1771 (restored ca. 1952)	N/S/L	contributing
Furnace bank and retaining wall	1771-1883 (restored 1930, 1957)	N/S/L	contributing
Hearth Road trace off Harrison Lloyd Road trace	1771-1883	N/S/L	contributing
Tail Race	ca. 1770, 1804-25	N/S/L	contributing
Charcoal house turnaround	1771-1783, 1804-25 (restored 1951-60)	N/S/L	contributing
Birdsboro-Warwick Road	1772, 1804 (restored 1956)	N/S/L	contributing
Birdsboro-Warwick Road Bridge	1772, 1804 (restored 1965)	N/S/L	contributing
1772 Road (Jones Mine Road; includes ford at French Creek)	1772	N/S/L	contributing
West Head Race	ca. 1802 (reconstructed 1950-52)	N/S/L	contributing
1804 Road	1804, 1809 (altered 1938, 1965)	N/S/L	contributing
Meadowbank Road	before 1804	N/S/L	contributing
1809 Road	1809 (restored 1956)	N/S/L	contributing
Thomas Lloyd stone walls	ca. 1810	N/S/L	contributing
Thomas Lloyd House farm lane	ca. 1810	N/S/L	contributing
1825 Road	1825	N/S/L	contributing
Ironmaster's Kitchen Yard Wall	1826 (restored 2000-01)	N/S/L	contributing
Ironmaster's House Yard Wall	ca. 1832-33	N/S/L	contributing
Nathan Care House field stone wall	ca. 1856	N/S/L	contributing
Nathan Care House boundary stone wall	ca. 1856	N/S/L	contributing
Bethesda Baptist Church Privy	1935	L	contributing
Woodlot House CCC Spring House	1936	N/S/L	contributing
Lenape CCC Spring House	1936	N/S/L	contributing
Baptism Creek Picnic Area Footbridges	ca. 1936	N/S/L	contributing
Baptism Creek Picnic Area Vehicle Bridges	ca. 1936	N/S/L	contributing
Thomas Lloyd House CCC Springhouse	ca. 1936	N/S/L	contributing

Name	Date	Level	Status
French Creek Bridge	ca. 1936	N/S/L	contributing
Boone Trail	ca. 1936	N/S/L	contributing
Lenape Trail	ca. 1936	N/S/L	contributing
Mill Creek Trail	ca. 1936	N/S/L	contributing
Raccoon Trail	ca. 1936	N/S/L	contributing
Buzzard Trail	ca. 1936	N/S/L	contributing
John Church House retaining walls and steps	1941	N/S/L	contributing
Mark Bird Lane	1954	N/S/L	contributing**
Visitor Parking Lot	1954	N/S/L	contributing**
Ironmaster's House Garden Fence	1956	N/S/L	contributing**
Tenant House No. 1 Walkway	1965	N/S/L	contributing**
Cedar Pasture Fence	1965	N/S/L	contributing**
Tenant House No. 3 Fence	1965	N/S/L	contributing
Vehicle collection			noncontributing***
Ironmaster's House garden footbridges			noncontributing
Ironmaster's House garden steps			noncontributing
Chicken House near Ironmaster's Spring House			noncontributing
Hog Pen near Ironmaster's Spring House			noncontributing
Village Meadow Fence			noncontributing
Meadowbank Road Fence			noncontributing
John Church House Fence			noncontributing
Fencing along public roads			noncontributing
Horse-Shoe Trail			noncontributing
Upper Parking Lot			noncontributing***
Water System			noncontributing
Utility Corridor			noncontributing
Eastern National Parks and Monuments Association storage shed			noncontributing

Name	Date	Level	Status
Pole Shed South of Tenant House No. 3			noncontributing
Maintenance Access Road north of Maintenance Building			noncontributing

III. SITES

Name	Date	Level	Status
Agricultural fields	1771-1883	N/S/L	contributing
Woods	1771-1883	N/S/L	contributing
Harrison Lloyd Farmstead		N/S/L	contributing
barn ruin	1780-1800		
worm fence ruin	1790-1810		
road trace	1790-1820		
house ruin	pre-1798		
well	ca. 1800		
stone walls	ca. 1800		
bank barn ruin	1810-50		
blacksmith shop ruin	1820-60		
Apple Orchard	1788 (replanted ca. 1960)	N/S/L	contributing
Bethesda Baptist Church Cemetery	ca. 1807	N/S/L	contributing
Wheelwright-Carpenter's Shop ruin	ca. 1825	N/S/L	contributing
Ironmaster's House Grounds		N/S/L	contributing
greenhouse ruin	ca. 1829		
ice/summer house ruin	ca. 1833-1867		
gardner's tool house ruin	by 1858		
Schoolhouse ruin	1836	N/S/L	contributing
Anthracite Furnace ruin	1853	N/S/L	contributing
Charcoal Kilns ruin	post-1853	N/S/L	contributing
Woodlot House ruin	by 1860	N/S/L	contributing

Name	Date	Level	Status
Brison House ruin	ca. 1860-1873	N/S/L	contributing
Mule stable ruin	pre-1879	N/S/L	contributing
Ore Roaster ruin	1882	N/S/L	contributing
CCC Camp SP-7/NP-4 site	1935		to be determined
Baptism Creek Picnic Area Parking lot	1936	N/S/L	contributing
Baptism Creek Picnic Area latrine site	1936		to be determined
CCC Camp NP-4 Utility Court site	1941		to be determined
Manning House ruin	n.d.	N/S/L	contributing

IV. OBJECTS

Name	Date	Level	Status
Baptism Creek Picnic Area fireplaces	1936	N/S/L	contributing
Baptism Creek Picnic Area water fountains	1936	N/S/L	contributing
Mark Bird Lane culvert	ca. 1936	N/S/L	contributing
John Church Driveway culvert	1940	N/S/L	contributing
Boarding House Pump and Well Cover	1957	N/S/L	contributing
Archeological artifacts and objects collection		N/S/L	contributing
Archival and manuscripts collection		N/S/L	contributing
National Park Service records collection			noncontributing
Furnishings collection			noncontributing***
Slag Pile			noncontributing
Wagon wheels, iron stacks, watering trough			noncontributing
Trash cans			noncontributing
Drinking fountains			noncontributing
Wood benches			noncontributing
Visitor Center flagpole			noncontributing
Interpretive signs			noncontributing

APPENDIX D: CORRECTIONS TO HISTORIC BASE MAPS

The following pages reproduce the historic base maps and map keys contained in the 1997 Cultural Landscape Report produced by KFS Cultural Resources Group. Corrections have been made to the maps and the keys based on research conducted for the Historic Resources Survey. Entries in the map keys that should be deleted have been struck through. Additions that should be made to the keys have been italicized. These changes have also been made to the base maps themselves.

1800 Base Map – Overall Site

Sources:

Information contained on this map was compiled from numerous sources located predominantly in HOFU's archives and files. Key sources include: Russell Apple's "Historical Base Map – Village Area 1830-1840" and his "Documentation for Historic Base Maps: 1830-1840," 1956; National Park Service, "Topography Hopewell Village – French Creek Demonstration Recreation Project, 1937, rev. 1938; aerial photographs dating from ca. 1920-1980s; historic structure reports; Delaware Valley Orienteering Association's "French Creek East, Orienteering Map," 1992; among others.

Notes:

- The inclusion of Tenant House and Boarding House outbuildings on this map are conjectural; however, these were common outbuildings and believed to have existed at the site.
- Vegetation layers included on this map are conjectural and based primarily on field survey, arborist's report, other previous reports, and twentieth century aerial photographs.
- Additional buildings may have existed on and off the site during this time period; however, current commentary evidence does not provide for their locations. Therefore, they are not included on this map.
- Use of fences and/or stone walls as boundary demarcations was common practice during this time period. Evidence exists for this practice at Hopewell Furnace; however current documentary evidence does not provide for all locations or dates of erection of fences or wall, and therefore, are not included on this map.
- The 1804 and 1809 Roads are presumed to have existed prior to their formal designations and are included on this map.

Building Number and Name:

~~71. Thomas Lloyd House~~ – Delete
72A. Harrison Lloyd Barn
72B. Harrison Lloyd House
~~72C. Harrison Lloyd Blacksmith Shop~~ – Delete
79. Bethesda Baptist Church
~~80. Bethesda Baptist Church Carriage Shed~~ – Delete

1800 Base Map – Core Area

Sources:

Information contained on this map was compiled from numerous sources located predominantly in HOFU's archives and files. Key sources include: Russell Apple's "Historical Base Map – Village Area 1830-1840" and his "Documentation for Historic Base Maps: 1830-1840," 1956; National Park Service, "Topography Hopewell Village – French Creek Demonstration Recreation Project, 1937, rev. 1938; aerial photographs dating from ca. 1920-1980s; historic structure reports; Delaware Valley Orienteering Association's "French Creek East, Orienteering Map," 1992; among others.

Notes:

- The inclusion of Tenant House and Boarding House outbuildings on this map are conjectural; however, these were common outbuildings and believed to have existed at the site.
- Vegetation layers included on this map are conjectural and based primarily on field survey, arborist's report, other previous reports, and twentieth century aerial photographs.
- Additional buildings may have existed on and off the site during this time period; however, current documentary evidence does not provide for their locations. Therefore, they are not included on this map.
- Use of fences and/or stone walls as boundary demarcations was common practice during this time period. Evidence exists for this practice at Hopewell Furnace; however, current documentary evidence does not provide for all locations or dates of erection of fences or wall, and therefore, are not included on this map.
- The 1804 and 1809 Roads are presumed to have existed prior to their formal designations and are included on this map.

Building Number and Name:

1. Ironmaster's House
2. Furnace Barn
3. Office and Store
6. Blacksmith Shop
7. Furnace Complex
8. Wheel Shop
9. Charcoal House
10. Add Bridge House

~~19. Tenant House No. 1~~ – Delete
~~20. Tenant House No. 2~~ – Delete

32. East Head Race
110. Tail Race – Add
111. West Head Race
115A. Birdsboro-Warwick Road Bridge

~~A. Tenant House No. 1 Barn~~ – Delete
~~B. Tenant House No. 1 Privy~~ – Delete
~~C. Tenant House No. 2 Barn~~ – Delete
~~D. Tenant House No. 2 Privy~~ – Delete

1845 Base Map – Overall Site

Sources:

Information contained on this map was compiled from numerous sources located predominantly in HOFU's archives and files. Key sources include: Russell Apple's "Historical Base Map – Village Area 1830-1840" and his "Documentation for Historic Base Maps: 1830-1840," 1956; National Park Service, "Topography Hopewell Village – French Creek Demonstration Recreation Project, 1937, rev. 1938; aerial photographs dating from ca. 1920-1980s; historic structure reports; Delaware Valley Orienteering Association's "French Creek East, Orienteering Map," 1992; among others.

Notes:

- The inclusion of Tenant House and Boarding House outbuildings on this map are conjectural; however, these were common outbuildings and believed to have existed at the site.
- Vegetation layers included on this map are conjectural and based primarily on field survey, arborist's report, other previous reports, and twentieth century aerial photographs.
- Additional buildings may have existed on and off the site during this time period; however, current documentary evidence does not provide for their locations. Therefore, they are not included on this map.
- Use of fences and/or stone walls as boundary demarcations was common practice during this time period. Evidence exists for this practice at Hopewell Furnace; however, current documentary evidence does not provide for all locations or dates of erection of fences or wall, and therefore, are not included on this map.

Building Number and Name:

27. Church House
28. Church Barn
71. Thomas Lloyd House
71A. Thomas Lloyd Wagon Shed
72A. Harrison Lloyd Barn
72B. Harrison Lloyd House
72C. Harrison Lloyd Blacksmith Shop
~~76. Woodlot House~~ – Delete
79. Bethesda Baptist Church
80. Bethesda Baptist Church Carriage Shed
87. Thomas Lloyd Spring House
K. Manning Barn
L. Manning House

1845 Base Map – Core Area

Sources:

Information contained on this map was compiled from numerous sources located predominantly in HOFU's archives and files. Key sources include: Russell Apple's "Historical Base Map – Village Area 1830-1840" and his "Documentation for Historic Base Maps: 1830-1840," 1956; National Park Service, "Topography Hopewell Village – French Creek Demonstration Recreation Project, 1937, rev. 1938; aerial photographs dating from ca. 1920-1980s; historic structure reports; Delaware Valley Orienteering Association's "French Creek East, Orienteering Map," 1992; among others.

Notes:

- The inclusion of Tenant House and Boarding House outbuildings on this map are conjectural; however, these were common outbuildings and believed to have existed at the site.
- Vegetation layers included on this map are conjectural and based primarily on field survey, arborist's report, other previous reports, and twentieth century aerial photographs.
- Additional buildings may have existed on and off the site during this time period; however, current documentary evidence does not provide for their locations. Therefore, they are not included on this map.
- Use of fences and/or stone walls as boundary demarcations was common practice during this time period. Evidence exists for this practice at Hopewell Furnace; however, current documentary evidence does not provide for all locations or dates of erection of fences or wall, and therefore, are not included on this map.

Building Number and Name:

1. Ironmaster's House
2. Furnace Barn
3. Office and Store
6. Blacksmith Shop
7. Furnace Complex
8. Wheel House
9. Charcoal House
10. Bridge House
13. Ironmaster's Greenhouse
16. Ironmaster's Bake Ovens
17. Ironmaster's Spring House
18. School House
19. Tenant House No. 1
20. Tenant House No. 2
24. Boarding House
32. East Head Race
33. Cast House
41. Smoke House
110. *Tail Race* – Add
111. West Head Race
A. Tenant House No. 1 Barn
B. Tenant House No. 1 Privy
C. Tenant House No. 2 Barn
D. Tenant House No. 2. Privy
E. Privy
~~F. Tool House~~ – Delete
G. Ice and Summer House
H. Boarding House Barn
I . Boarding House Privy
J. Wagon Scales
M. *Carpenter's Shop* – Add

1883 Base Map – Overall Site

Sources:

Information contained on this map was compiled from numerous sources located predominantly in HOFU's archives and files. Key sources include: Russell Apple's "Historical Base Map – Village Area 1830-1840" and his "Documentation for Historic Base Maps: 1830-1840," 1956; National Park Service, "Topography Hopewell Village – French Creek Demonstration Recreation Project, 1937, rev. 1938; aerial photographs dating from ca. 1920-1980s; historic structure reports; Delaware Valley Orienteering Association's "French Creek East, Orienteering Map," 1992; among others.

Notes:

- The inclusion of Tenant House and Boarding House outbuildings on this map are conjectural; however, these were common outbuildings and believed to have existed at the site.
- Vegetation layers included on this map are conjectural and based primarily on field survey, arborist's report, other previous reports, and twentieth century aerial photographs.
- Additional buildings may have existed on and off the site during this time period; however, current documentary evidence does not provide for their locations. Therefore, they are not included on this map.
- Use of fences and/or stone walls as boundary demarcations was common practice during this time period. Evidence exists for this practice at Hopewell Furnace; however current documentary evidence does not provide for all locations or dates of erection of fences or wall, and therefore, are not included on this map.

Building Number and Name:

27. Church House
28. Church Barn
55. Brison House
71. Thomas Lloyd House
71A. Thomas Lloyd Wagon Shed
72A. Harrison Lloyd Barn
72B. Harrison Lloyd House
72C. Harrison Lloyd Blacksmith Shop
76. Woodlot House
79. Bethesda Baptist Church
80. Bethesda Baptist Church Carriage Shed
~~87. Thomas Lloyd Spring House~~ – Delete
K. Manning Barn
L. Manning House

1883 Base Map – Core Area

Sources:

Information contained on this map was compiled from numerous sources located predominantly in HOFU's archives and files. Key sources include: Russell Apple's "Historical Base Map – Village Area 1830-1840" and his "Documentation for Historic Base Maps: 1830-1840," 1956; National Park Service, "Topography Hopewell Village – French Creek Demonstration Recreation Project, 1937, rev. 1938; aerial photographs dating from ca. 1920-1980s; historic structure reports; Delaware Valley Orienteering Association's "French Creek East, Orienteering Map," 1992; among others.

Notes:

- The inclusion of Tenant House and Boarding House outbuildings on this map are conjectural; however, these were common outbuildings and believed to have existed at the site.
- Vegetation layers included on this map are conjectural and based primarily on field survey, arborist's report, other previous reports, and twentieth century aerial photographs.
- Additional buildings may have existed on and off the site during this time period; however, current documentary evidence does not provide for their locations. Therefore, they are not included on this map.
- Use of fences and/or stone walls as boundary demarcations was common practice during this time period. Evidence exists for this practice at Hopewell Furnace; however, current documentary evidence does not provide for all locations or dates of erection of fences or wall, and therefore, are not included on this map.

Building Number and Name:

1.	Ironmaster's House
2.	Furnace House
3.	Office and Store
6.	Blacksmith Shop
7.	Furnace Complex
8.	Wheel House
9.	Charcoal House
10.	Bridge House
11.	Anthracite Furnace Ruin
13.	Ironmaster's Green House
16.	Ironmaster's Bake Ovens
17.	Ironmaster's Spring House
18.	School House
19.	Tenant House No. 1
20.	Tenant House No. 2
21.	Tenant House No. 3
23.	*Tenant House No. 3 Barn* – Add
24.	Boarding House
25.	Nathan Care House
26.	Nathan Care Barn
32.	East Head Race
33.	Cast House
39.	Charcoal Kilns
41.	Smoke House
110.	*Tail Race* – Add
111.	West Head Race
A.	Tenant House No. 1 Barn
B.	Tenant House No. 1 Privy
C.	Tenant House No. 2 Barn
D.	Tenant House No. 2 Privy
E.	Privy
F.	Tool House

G.	Ice and Summer House	M.	Carpenter's Shop
H.	Boarding House Barn	N.	Care Log Cabin
J.	Wagon Scales	O.	Tenant House No. 4

1938 Base Map – Overall Area

Sources:

Information contained on this map was compiled from numerous sources located predominantly in HOFU's archives and files. Key sources include: Russell Apple's "Historical Base Map – Village Area 1830-1840" and his "Documentation for Historic Base Maps: 1830-1840," 1956; National Park Service, "Topography Hopewell Village – French Creek Demonstration Recreation Project, 1937, rev. 1938; aerial photographs dating from ca. 1920-1980s; historic structure reports; Delaware Valley Orienteering Association's "French Creek East, Orienteering Map," 1992; among others.

Notes:

- Vegetation layers included on this map are based primarily on field survey, arborist's report, other previous reports, and twentieth century aerial photographs and mapping.
- Additional buildings may have existed on and off the site during this time period; however, current documentary evidence does not provide for their locations and therefore, are not included on this map.
- Only roads known to have been paved during this period are shown as paved, all others are shown as unpaved.

Building Number and Name:

27. Church House
28. Church House Barn
55. Brison House Ruin
71. Thomas Lloyd House
71A. Thomas Lloyd Wagon Shed
72A. Harrison Lloyd Barn
72B. Harrison Lloyd House
72C. Harrison Lloyd Blacksmith Shop
76. Woodlot House Ruin
79. Bethesda Baptist Church
80. Bethesda Baptist Church Carriage Shed
87. *Thomas Lloyd Springhouse* – Add
122. *Baptism Creek Picnic Shelter and Concession Building* – Add
? *Baptism Creek Picnic Shelter landscape features (springhouses, bridges, trails, fireplaces, latrine)* – Add
K. Manning Barn Ruin
L. Manning House Ruin
R. Baptism Creek Picnic Area Parking

1938 Base Map – Core Area

Sources:

Information contained on this map was compiled from numerous sources located predominantly in HOFU's archives and files. Key sources include: Russell Apple's "Historical Base Map – Village Area 1830-1840" and his "Documentation for Historic Base Maps: 1830-1840," 1956; National Park Service, "Topography Hopewell Village – French Creek Demonstration Recreation Project, 1937, rev. 1938; aerial photographs dating from ca. 1920-1980s; historic structure reports; Delaware Valley Orienteering Association's "French Creek East, Orienteering Map," 1992; among others.

Notes:

- Vegetation layers included on this map are based primarily on field survey, arborist's report, other previous reports, and twentieth century aerial photographs and mapping.
- Additional buildings may have existed on and off the site during this time period; however, current documentary evidence does not provide for their locations and therefore, are not included on this map.
- Only roads known to have been paved during this period are shown as paved, all others are shown as unpaved.

Building Number and Name:

1. Ironmaster's House
2. Furnace House
3. Office and Store
6. Blacksmith Shop
7. Furnace Complex
9. Charcoal House
11. Anthracite Furnace Ruin
13. Ironmaster's Green House
17. Ironmaster's Spring House
18. School House Ruin
19. Tenant House No. 1
20. Tenant House No. 2
21. Tenant House No. 3
23. Tenant House No. 3 Barn
24. Boarding House
25. Nathan Care House
26. Nathan Care Barn
32. East Head Race
39. Charcoal Kilns
41. Smoke House
51. Pump House

110. *Tail Race* – Add
111. West Head Race
O. Tenant House No. 4 Ruin
P. Chicken House
Q. Corn Crib
W. *CCC Firehouse* – Add

1995 Base Map – Overall Area

Sources:

Information contained on this map was compiled from numerous sources located predominantly in HOFU's archives and files. Key sources include: Kutztown University "Disk Files of Hopewell Furnace NHS," Menke & Menke Field Survey including GPS readings, Russell Apple's "Historical Base Map – Village Area 1830-1840" and his "Documentation for Historic Base Maps: 1830-1840," 1956; National Park Service, "Topography Hopewell Village – French Creek Demonstration Recreation Project, 1937, rev. 1938; aerial photographs dating from ca. 1920-1980s; historic structure reports; Delaware Valley Orienteering Association's "French Creek East, Orienteering Map," 1992; among others.

Notes:

- Vegetation layers included on this map are based primarily on field survey, arborist's report, other previous reports, and twentieth century aerial photographs and mapping.

Building Number and Name:

27. Church House
28. Church House Barn
55. Brison House Ruin
66. Warehouse
67. Oil House
70. Church Garage
71. Thomas Lloyd House
71A. Thomas Lloyd Wagon Shed
72A. Harrison Lloyd Barn Ruin
72B. Harrison Lloyd House Ruin
72C. Harrison Lloyd Blacksmith Shop Ruin
76. Woodlot House Ruin
78. YCC Building
79. Bethesda Baptist Church
80. Bethesda Baptist Church Carriage Shed
87. Thomas Lloyd Springhouse
122. Baptism Creek Picnic Shelter (ESA Shelter)
? *Baptism Creek Picnic Shelter landscape features (springhouses, bridges, trails, fireplaces, latrine)* – Add
R. Baptism Creek Picnic Area Parking
S. Quonset Hut
K. Manning Barn Site
L. Manning House Site

1995 Base Map – Core Area

Sources:

Information contained on this map was compiled from numerous sources located predominantly in HOFU's archives and files. Key sources include: Kutztown University "Disk Files of Hopewell Furnace NHS," Menke & Menke Field Survey including GPS readings, Russell Apple's "Historical Base Map – Village Area 1830-1840" and his "Documentation for Historic Base Maps: 1830-1840," 1956; National Park Service, "Topography Hopewell Village – French Creek Demonstration Recreation Project, 1937, rev. 1938; aerial photographs dating from ca. 1920-1980s; historic structure reports; Delaware Valley Orienteering Association's "French Creek East, Orienteering Map," 1992; among others.

Notes:

- Vegetation layers included on this map are based primarily on field survey, arborist's report, other previous reports, and twentieth century aerial photographs and mapping.

Building Number and Name:

1.	Ironmaster's House	32.	East Head Race
2.	Furnace House	33.	Cast House
3.	Office and Store	39.	Charcoal Kilns
6.	Blacksmith Shop	41.	Smoke House
8.	Furnace Bank Retaining Wall	51.	Pump House
7.	Furnace Complex	78.	YCC Building
9.	Charcoal House	98.	Quarters
10.	Bridge House	99.	Quarters
11.	Anthracite Furnace Ruin	100.	Visitor Center
13.	Green House Ruin	101.	Maintenance Building
17.	Ironmaster's Spring House	102.	Bally Building
18.	School House Ruin	110.	Tail Race
19.	Tenant House No. 1	111.	West Head Race
20.	Tenant House No. 2	O.	Tenant House No. 4 Ruin
21.	Tenant House No. 3	S.	Quonset Hut
23.	Tenant House No. 3 Barn	U.	Car Port
24.	Boarding House	V.	Tenant House No. 4 Wall Ruin
25.	Nathan Care House	W.	Former CCC Garage
26.	Nathan Care Barn		