NATIONAL PARK SERVICE

National Park Service Handbook for the Storage, Transportation, and Use of Explosives

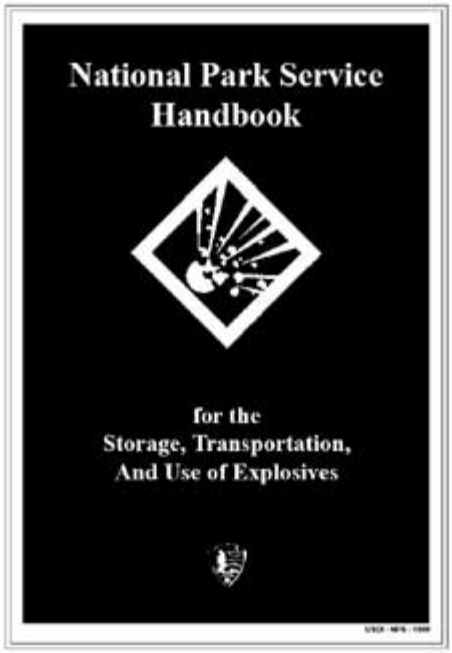

NATIONAL PARK SERVICE HANDBOOK

for the Transportation, and Use of Explosives

1999

TABLE OF CONTENTS

/index.htm
Last Updated: --2007

NATIONAL PARK SERVICE

National Park Service Handbook for the Storage, Transportation, and Use of Explosives

TABLE OF CONTENTS

COVER (HTML)

CONTENTS (PDF)

Chapter 1 - GENERAL REQUIREMENTS (PDF)

- Federal Regulations
- Explosives Use Program
- Blasting Personnel
- Training
- Certification
- Blasting Review Board
- Specifications for Contracts
- Proper Tools for Good Blasting
- Job Safety Analysis

Chapter 2 - EXPLOSIVES (PDF)

- Theory of Explosives
- Mechanics of Blasting
- Properties of Explosives
- Classification of Explosives
- Blasting Agents and Ammonium Nitrate
- Selection of Explosives
- Initiating Devices

Chapter 3 - STORAGE (PDF)

- Explosives Magazines
- Magazine Inspection
- Magazine Construction
- Storage Within Magazines
- Inventory
- Two-Component Cap Sensitive Explosives
- Storing Explosives in Remote Locations

Chapter 4 - TRANSPORTATION (PDF)

- Transporting Explosives by Motor Vehicle
- Transporting Explosives with Pack Stock
- Transporting Explosives with Trail Vehicles and ATVs
- Transporting Explosives by Vessel
- Transporting Explosives by Aircraft

Chapter 5 - BLAST AREA SECURITY (PDF)

Area Security
Signing
Signal Systems
Area Inspections

Chapter 6 - INITIATION (PDF)

Components Used in Electric Blasting
Ohms Law
Electric Blasting Caps
Electric Blasting Circuits
Splicing
Primers
Exploding Bridgewire Detonators
Detonating Cord
Wiring
Firing Procedures
Blasting with Detonating Cord
Detaline Detonating Cord Systems
Nonelectric Initiation Systems
The Nonel System

Chapter 7 - LOADING BOREHOLES (PDF)

Priming Charge
Loading, Tamping, and Stemming
Delay Primers

Chapter 8 - BLAST DESIGN (PDF)

Hole Patterns
Delay Patterns
Powder Factor
Burden-Spacing Calculations
Borehole Coupling
Explosives Economic
Blast Design

Chapter 9 - GENERAL ROCK REMOVAL (PDF)

Principles of Drilling
Importance of Drilling and the Driller
Bench Blasting
Secondary Blasting
Lifters and Snakeholes
Charge Distribution
Trenching
Need for Controlled Blasting
Shock Energy/Heave Energy
Use of EBCs in Utility and Light Construction Industry
Use of Detonating Cord
Relationship of Boostering ANFO to Detonation Velocity
Use of ANFO in Utility and Light Construction Industry

Used Conveyor Belting Blasting Mats
Trenching (Track Drill)
Double Priming
Trench Shooting (Hand-held Rock Drill)
Pit Shooting
Pole Hole Shooting
Boulder Breaking
Stump Shooting
Hazard Tree Felling
Post Hole Shooting

Chapter 10 - GENERAL BLASTING (PDF)

Blasting Mats
Sequential Blasting
Destruction of Explosives (Non-Deteriorated Product)
Disposing of Deteriorated or Damaged Explosives
Ground Vibration and Air Blast
Blasting Vibration and Air Blast
General Safety in Blasting Practices

Chapter 11 - SPECIALIZED BLASTING TECHNIQUES (PDF)

Avalanche Blasting
Military Weapons
Fireline Explosives
Burnol Backfiring Devices
Animal Carcass Removal with Explosives
Non-Detonating Rock Breaking Tool
Air Gapping
Expansion Alternatives
Expanding Grout

GLOSSARY OF FREQUENTLY USED TERMS (PDF)

REFERENCES (PDF)

APPENDIX A - Blasting Specialties and Requirements for Certification (PDF)

APPENDIX B - Standard Explosives Use Specification for Contracts (PDF)

INDEX (PDF)

---

explosives/contents.htm
Last Updated: 27-Jun-2007

NATIONAL PARK SERVICE

National Park Service Handbook for the Storage, Transportation, and Use of Explosives

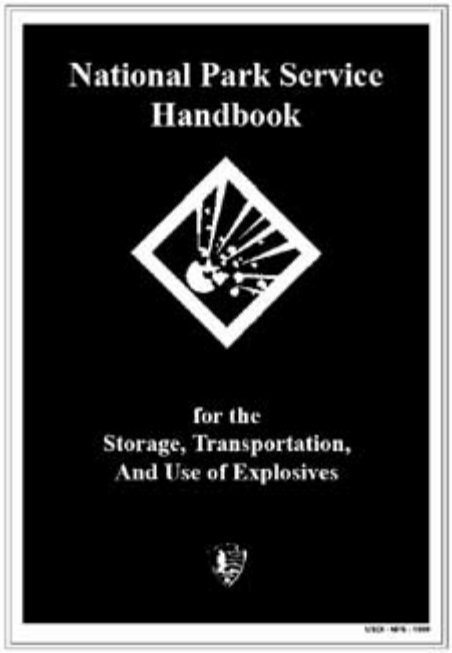

NATIONAL PARK SERVICE HANDBOOK

for the Transportation, and Use of Explosives

1999

TABLE OF CONTENTS

/index.htm
Last Updated: --2007

National Park Service Handbook

for the
Storage, Transportation,
Training for Explosives Use, and
Handling of Explosives

CONTENTS

Chapter 1 - GENERAL REQUIREMENTS
Federal Regulations 1
Explosives Use Program..... 4
Blasting Personnel 4
Training..... 8
Certification 10
Blasting Review Board 14
Specifications for Contracts 14
Proper Tools for Good Blasting 17
Job Safety Analysis.....18

Chapter 2 - EXPLOSIVES
Theory of Explosives 21
Mechanics of Blasting 23
Properties of Explosives 24
Classification of Explosives 27
Blasting Agents and Ammonium Nitrate 30
Selection of Explosives..... 32
Initiating Devices 35

Chapter 3 - STORAGE
Explosives Magazines 39
Magazine Inspection 41
Magazine Construction 42
Storage Within Magazines 43
Inventory 53
Two-Component Cap Sensitive Explosives 55
Storing Explosives in Remote Locations 55

Chapter 4 - TRANSPORTATION

Transporting Explosives by Motor Vehicle 57
Transporting Explosives with Pack Stock 75
Transporting Explosives with Trail Vehicles and ATVs 76
Transporting Explosives by Vessel 76
Transporting Explosives by Aircraft 77

Chapter 5 - BLAST AREA SECURITY

Area Security 85
Signing 85
Signal Systems 86
Area Inspections 87

Chapter 6 - INITIATION

Components Used in Electric Blasting 89
Ohms Law 90
Electric Blasting Caps 90
Electric Blasting Circuits 91
Splicing 92
Primers... 93
Exploding Bridgewire Detonators 95
Detonating Cord 95
Wiring 97
Firing Procedures 98
Blasting with Detonating Cord 101
Detaline Detonating Cord Systems 104
Nonelectric Initiation Systems 105
The Nonel System 105

Chapter 7 - LOADING BOREHOLES

Priming Charge 107
Loading, Tamping, and Stemming 109
Delay Primers 110

Chapter 8 - BLAST DESIGN

Hole Patterns 113
Delay Patterns 114

Powder Factor 115
Burden-Spacing Calculations 115
Borehole Coupling 116
Explosives Economic..... 116
Blast Design 119

Chapter 9 - GENERAL ROCK REMOVAL
Principles of Drilling 123
Importance of Drilling and the Driller 125
Bench Blasting 125
Secondary Blasting 125
Lifters and Snakeholes 126
Charge Distribution 126
Trenching 126
Need for Controlled Blasting 127
Shock Energy/Heave Energy 129
Use of EBCs in Utility and Light Construction Industry 134
Use of Detonating Cord 138
Relationship of Boostering ANFO to Detonation Velocity 139
Use of ANFO in Utility and Light Construction Industry 142
Used Conveyor Belting Blasting Mats 143
Trenching (Track Drill) 144
Double Priming 145
Trench Shooting (Hand-held Rock Drill) 146
Pit Shooting 146
Pole Hole Shooting 146
Boulder Breaking 147
Stump Shooting 149
Hazard Tree Felling 150
Post Hole Shooting 154

Chapter 10 - GENERAL BLASTING
Blasting Mats 155
Sequential Blasting..... 155
Destruction of Explosives (Non-Deteriorated Product) 157
Disposing of Deteriorated or Damaged Explosives 158
Ground Vibration and Air Blast 160
Blasting Vibration and Air Blast 162
General Safety in Blasting Practices 165

Chapter 11 - SPECIALIZED BLASTING TECHNIQUES
Avalanche Blasting 167

Military Weapons 176
Fireline Explosives 181
Burnol Backfiring Devices 194
Animal Carcass Removal with Explosives 195
Non-Detonating Rock Breaking Tool 196
Air Gapping 198
Expansion Alternatives 199
Expanding Grout 199

GLOSSARY OF FREQUENTLY USED TERMS 203

REFERENCES 213

APPENDIX A
Blasting Specialties and Requirements for Certification 215

APPENDIX B
Standard Explosives Use Specification for Contracts 217

INDEX 221

FOREWORD

This guide for National Park Service blasters presents minimum requirements for using, storing, and transporting explosives and blasting materials. These requirements are essential to ensure that blasting activities are accomplished safely and to prevent theft of explosives materials. The guide consolidates information needed to conduct normal National Park Service operations into one source, but it is not intended to be all inclusive. There are many other supporting documents that should be referred to by National Park Service blasters.

VARIANCE

This document contains rules for procurement, possession, storage, transportation, and use of explosives materials within the National Park Service.

Understanding that conditions may exist in operations where certain standards will not have practical application, a regional blasting officer or his/her authorized representative may, pursuant to this document, and appropriate administrative requirements of the service blasting officer and industries standards, and upon request of application, and after adequate investigation by the service blasting officer or his authorized representative, permit a variation from these requirements when other means of providing an equivalent measure of protection can afford. Such variation granted shall be limited to the particular case or cases covered in the application for variance and may be revoked for cause. Variance application may be submitted in a memo format and approved in same.

In regard to the many requirements for explosives use, as well as the service, variation, and complexities encountered, we cannot anticipate all conditions in which explosives may be employed. The information in this handbook is considered reliable, but blasters should make their own tests to determine the applicability of information or the suitability of any product and/or method described for their own particular purpose.

Therefore, it is the park blaster-in-charge who is ultimately responsible for all purchasing, transportation, storage, and handling of explosives materials, ensuring the most safe and efficient use of explosives and their components.

Chapter 1
GENERAL REQUIREMENTS

All work with explosives shall be conducted under the direct supervision of a qualified blaster who holds a current *NPS-65* blasters certificate and/or equivalent. The certification shall specify the type of blasting qualifications, such as structural/fireline/avalanche, etc. Transportation, use, and mixing of component explosives, storage, magazine inspection, and disposal shall be done by a certified blaster, with the appropriate endorsements, if required to conduct specialized blasting activities. When two or more blasters are working together, one shall be the blaster-in-charge designated either by the supervisor or the blasters themselves.

The Doctrine of Absolute Liability-"Whoever is assigned, or assumes physical control of an explosive substance is deemed to have assumed ABSOLUTE LIABILITY in any case or accident or loss involving that substance".

FEDERAL REGULATIONS

Comply with all Federal, State and local laws as applicable. Use the most stringent regulation when a difference appears. Federal regulations controlling transportation, storage, and use are listed references.

- Warn residents in or near blasting areas well in advance (at least 24 hours) of actual blasting.
  Post flaggers or signs or verbally warn others of blasting operations. A seasonal or continuing notice is adequate for recurring work, such as for avalanche control.
- When blasting in the vicinity of oil, gas, electric, fire alarm, telegraph and natural gas utilities, notify representatives of such utilities at least 24 hours in advance of blasting. Specify the location and intended time of such blasting. Confirm verbal notice in writing. For recurring work in a relatively confined area, such as for avalanche control, written notice before the activity may be waived by the regional blasting officer, and/or park chief blaster.
- When blasting in congested areas or near railways, highways, or other structures that may be damaged, take special precautions in loading, delaying, and initiation of explosives. Confine each blast with mats or other methods to control fragments, air blasts, and vibration. If necessary, obtain assistance from the regional blasting officer or other qualified personnel.

- Prohibit smoking, firearms, matches, open-flame lamps, and other fires, flames or heat-producing devices and sparks within 50 feet of explosive magazines or while explosives are being handled, transported or used.
- Allow no one to handle explosives while under the influence of liquor, narcotics or prescription drugs that impair performance.
- Never abandon explosives, ammunition or blasting agents.
- Never fight a fire that is in imminent danger of contacting explosives. Evacuate the area to a safe distance and prevent reentry while danger exists. Guard the fire to prevent inadvertent access, exposing anyone to danger.
- If possible, conduct blasting operations after sunup and before sundown and during periods of clear visibility. If artificial light is necessary, use approved battery-activated lights. Flashlights shall have nonconductive cases and shall not touch explosives.
- Use exploding bridgewire detonators (EBW) or electric blasting caps (EBC) either instant or delay, nonelectric system (NONEL) or detcord cap and cord assemblies for exploding charges. Do not use EBCs near power lines or radio installations in avalanche control work, or near any source of extraneous electricity that may prematurely detonate the EBC.
- Never carry primers or loose detonators in pockets or in the same container with explosives.
- Never store or transport detonating cord in the same container with detonators.
- Use only explosives or explosive materials approved by regional blasting officer and/or stipulated in *NPS-65*.

TRAINING, CONTRACTING, AND OVERVIEW OF TRANSPORTING, STORING, AND HANDLING OF EXPLOSIVES

Personal protective equipment shall meet current Occupational Safety and Health Administration (OSHA) construction industry standards and NPS Safety Management Program requirements, and shall be kept available in sufficient quantity to provide for all blasting crew personnel, including guards.

Transportation

All transportation of explosives shall follow Department of Transportation (DOT), Federal Aviation Administration (FAA), Office of Aircraft Services (OAS), U.S. Coast Guard (USCG), state and local regulations, and NPS standards, whichever are applicable and most stringent. Vehicle transport of explosives shall be made by no more than two persons, at least one of whom is a licensed blaster or explosives handler. One shall possess a current CDL with Hazmat endorsement. The person receiving delivered explosives from vendor or other sources shall be a licensed explosives handler or blaster.

Storage

Storage of explosives shall be in magazines of the proper BATF class for the particular explosive, detonator, or blasting agent. Magazines shall be constructed in accordance with BATF and OSHA standards, following the most stringent requirements applicable to each magazine feature, and shall be placed in accordance with the American Table of Distances. Each magazine shall have two shrouded, five-tumbler locks meeting BATF requirements, and all magazine keys shall be on a separate lock series from all other locks and shall be kept under locked security. A key shall be assigned to the chief park blaster and/or the licensed explosives handler or blaster designated as the magazine operator; no keys shall be assigned to any other employees.

Magazines shall be visually inspected for any evidence of tampering at least once every seven days. There shall be no overnight storage of explosives other than in appropriate BATF-class storage facilities.

Inventory

Inventories shall be kept on all explosives, blasting agents, detonators and primers, including unmixed binaries. Permanent storage inventories shall be maintained by the designated magazine operator, field storage inventories by the blaster-in-charge. Inventories shall be by cartridge count and cap count, not by box or carton count (see Chapter 3). Working inventories shall be maintained on a daily basis. Permanent storage inventories shall be by withdrawal, return, and resupply, with physical magazine inventory checks at least monthly. Permanent storage inventories shall be by a "two-mode" system, with inventory sheets in each magazine or field storage location, and a hard-bound permanent inventory book in the possession of the magazine operator. Magazine and field storage inventories must balance at the start and end of each day; magazine and hard-bound inventories must be reconciled and must balance at any time a physical inventory check is made. Inventory entries shall be made in ink, and shall include: a) date, b) material and quantity removed/returned/resupplied, c) name of person being issued or returning materials, or in case of resupply, name of manufacturer, d) lot number and date of manufacture, e) name of person issuing/receiving materials, and f) purpose and location of materials used. Inventory inconsistencies shall be resolved upon discovery, with full explanation recorded in the hard-bound inventory book.

Use and Handling of Explosives

Only an NPS licensed blaster shall use explosives. The blaster may be assisted only by another trained and licensed blaster. All handling and use of explosives shall follow the practices outlined in the NPS Blaster's Handbook, Director's Orders, the standards and recommendations of OSHA, BATF, DOT, IME, Bureau of Mines (BOM) and the manufacturer of the product being used shall define standard practices to be followed. Violation of these guidelines shall be sufficient cause for immediate revocation of blaster certification by the regional blasting officer, or appropriate contractual action by the contracting officer as initiated by the Denver Service Center blasting officer or a certified blasting inspector.

Blast Area Security

Area security shall be the responsibility of the blaster-in-charge and shall be sufficient to preclude injury to any person, including those not directly involved in blasting operations, and all property. All persons serving as guards shall be thoroughly versed in their role and responsibilities by the blaster-in-charge. Signing and "positive-response" signal systems shall conform to OSHA and Manual of Uniform Traffic Control Devices (MUTCD) requirements, and N.P.S. 65 Handbook.

Blasting Specialties

Blasting operations requiring specialized techniques or products, such as delay blasting, pre-splitting, avalanche control, fireline blasting, shaft or tunnel work, and demolition, shall be performed only by a blaster specifically certified for the particular specialty by reason of training and experience.

Blast Records

All blasts shall be recorded. Repetitive single blasts may be recorded as a group on a cumulative daily basis. Multiple-charge blasts shall be recorded individually, giving the following information: a) date and time, b) location, c) weather, d) material being blasted and estimated volume or amount, e) explosive product and quantity used, f) priming, detonation and initiation system used, g) powder factor, blast design, with sketch if appropriate, h) blast results, and i) any problems encountered.

The chief park blaster shall maintain a file of park blast records, each record being retained for a least three years, and shall submit copies of current blast records to the regional blasting officer upon request. The park blast record file constitutes a body of data by which the suitability and effectiveness of products and techniques may be judged.

Disposal

In most cases, disposal should be done by the explosives supplier in accordance with IME policy. In remote field operations, should disposal of oversupply be preferable to transport for safety reasons, it shall be directly supervised by the blaster-in-charge and done only by persons thoroughly trained in proper disposal methods. Old, deteriorated or otherwise unstable explosives and detonators shall only be disposed of by persons specifically trained and experienced in such disposal; the location of such unstable products shall be immediately secured and guarded as if a blast was about to take place until disposal has occurred. The regional blasting officer shall be notified prior to any explosives disposal being done by National Park Service personnel in other than remote field situations where prior notification is not possible for safety reasons.

Accidents and Theft

Accidents involving explosives shall be reported immediately to the park superintendent, park safety officer, chief park ranger and chief park blaster, who shall promptly notify the regional or DSC blasting officer (as appropriate) and regional safety manager. In any case of theft or loss of explosives, the park superintendent, chief park ranger, and chief park blaster shall be promptly notified; such theft or loss shall also be reported within 24 hours to the local office of BATF, the park safety officer, the regional or DSC blasting officer (as appropriate), the regional safety manager, and law enforcement specialist. A Blasting Review Board meeting shall be held within three working days of any theft of, or accident with explosives.

Non-NPS Users of Explosives

All persons or entities utilizing explosives within the jurisdictional limits of the National Park Service shall conform to the requirements of this policy and applicable federal, state, and local regulations. All NPS promulgated special use permits, cooperative agreements, purchase orders, concession contracts, and construction and maintenance contracts in which the use of explosives may be anticipated shall contain the NPS standard Explosives Specification, implementing the intent of this policy and program.

This standard specification or clause shall specifically address: a) blaster designation and qualification, b) blasting crew qualification, c) transportation, storage, handling, and use of explosives, d) blasting plans and records, e) safety plans, f) disposal of explosives and g) any other subjects related to a specific need. Such blasting operations shall be accomplished only under the inspection of NPS licensed blasting inspectors. The chief park blaster shall be available as a technical consultant to the contracting officer's representative on any contract involving explosives.

EXPLOSIVES USE PROGRAM

NPS Personnel

All persons handling, transporting or using explosives shall be certified (licensed). All certified blasters shall possess a current Standard Red Cross First Aid certification, or equivalent, and a current cardiopulmonary resuscitation (CPR) certification. All personnel shall be in good physical and mental condition and not be addicted to or under the influence of alcohol, drugs, strong medications, or intoxicants of any kind when using, handling or transporting explosives. There shall be no language barrier within any blasting crew. All persons handling, transporting or using explosives are subject to the drug testing program.

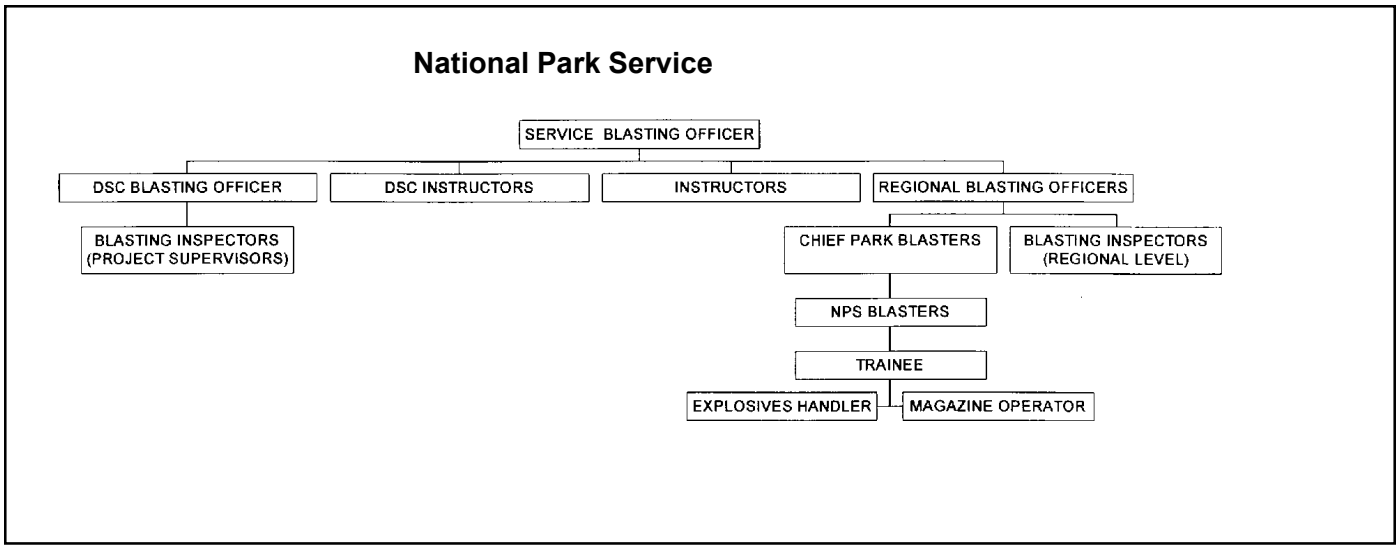

(Figure 1-1) NPS Blasting Program organizational chart.

NOTES: (1) All positions within the organization are, or may be, collateral duty in nature.
(2) Many of the positions shown can, or should be, combined into the duties of one person. For instance, within a small park, the chief blaster, NPS blaster, blasting inspector and magazine operator could easily be the same individual.
(3) When on a blasting job, the blaster becomes blaster-in-charge and assumes full responsibility and authority for all aspects of the blast and related activities; no one can override that authority without assuming the responsibilities of the blaster-in-charge and relieving the original blaster of all liability.

National Park Service Blasting Officer

Referred to as the Service blasting officer. May be a collateral duty position, not necessarily located in the Washington Office. Shall have at least the 40 hours of Explosives and Blasting Safety Training, and must be familiar with all aspects of NPS blasting operations. The Service blasting officer shall be nominated by the NPS safety manager, approved by the Associate Director, Operations, and appointed by the NPS Director.

Duties:

- Serves as overall coordinator of the NPS Blasting Program, and in a technical advisory capacity for blasting operations, and training in the National Park Service.
- Supervises all Explosives Instructor Training that takes place in the Service, and has the responsibility and authority for issuance, suspension, or revocation of Instructor certifications.
- Stays abreast of and disseminates information on advancements and developments in blasting products and methodology.
- Maintains a library of training materials, aids, and sources for use by NPS explosives instructors.
- Communicates with NPS safety manager, Associate Director of Operations, and regional and DSC blasting officers regarding the NPS Blasting Program, procedures, and regulations.
- Develops an annual synopsis of NPS blasting activities, and the results of Blasting Review Boards, and distributes them to all regional blasting officers and the DSC blasting officer.
- Serves as the officer of final appeal on cases of suspension or revocation of certification, and in cases of requests for policy variance that have been denied by a regional blasting officer.

Regional Blasting Officer

May be a collateral duty position, not necessarily located in the NPS Regional Office. Shall have at least 40 hours of NPS Explosives and Blasting Safety Training, and must be familiar with all aspects of NPS blasting

operations within the region. The regional blasting officer shall be nominated by the regional safety manager, approved by the Associate Regional Director, Operations, and appointed by the Regional Director.

Duties:

- Serves as overall coordinator of the Blasting Program, and in a technical advisory capacity for blasting operations, within the region; reviews contractor blasting plans on regional or park level contracts.
- Stays abreast of, and disseminates information on advancements and developments in blasting products and methodology; disseminates information provided by the Service blasting officer.
- Supervises all explosives training that takes place in the region and has the responsibility and authority for issuance, suspension, or revocation of blaster certifications.
- Reviews and approves or disapproves any requests for variance from the Policy and Blasting Program arising from NPS areas within the region.
- With the regional safety manager, establishes a Blasting Review Board to investigate cases of accident or theft involving explosives.
- Maintains a current roster of Blasting Program participants, certifications and experience, including specialties.
- Communicates with regional safety manager, Associate Regional Director of Operations, DSC, and other regional blasting officers, superintendents, park safety officers, and park personnel involved in the Blasting Program regarding blasting policy, procedures, and regulations.

Chief Park Blaster

Certified NPS blaster who is best qualified by experience, training, and position within the park organization to guide and oversee all park activities involving explosives. The chief park blaster shall be appointed by the superintendent; the regional blasting officer may recommend a candidate for appointment.

Duties:

- Serves in a technical advisory capacity for blasting operations in that park.
- Has the responsibility and authority for supervising the blasting program and activities in that park.
- Stays abreast of and disseminates information on advancements and developments in blasting products and methodology.
- Administers tests and disseminates information provided by the regional and service blasting officers.
- Maintains blast records and technical library; submits copies of blast records to the regional blasting officer upon request.

Blaster-in-Charge

The blaster having the authority and ultimate responsibility for all aspects of the blast and its results. There shall be a designated blaster-in-charge for each blast. The blaster-in-charge shall maintain a written record of blasts and submit it to the chief park blaster. A qualified person in charge of a blasting operation. Also, a person who has passed the test approved by NPS/65, which certifies his or her qualifications to conduct and supervise blasting activities.

Blaster

National Park Service employee who has successfully completed 40 hours of NPS Explosives and Blasting Safety Training, with at least three years prior experience as a licensed blaster-in-training or blaster (3 blast projects a year); recommended by the explosives instructor, approved and licensed by the regional blasting officer with 24 hours of recertification training and successful completion of examination. Capable of effec-

tively designing and safely executing blasting operations necessary to meet most NPS blasting needs. Blasting specialties in which the blaster is qualified will be listed on the back of the NPS blaster's license.

The term *specialty* applies to those blasters who have received advanced training in rock mechanics, explosives product technology and blast design, and demonstrated the capability to design and successfully execute complex multiple-hole delay blast systems. Emphasis at this level is on controlled results of more complex blasting problems. It is recommended not mandatory that each blaster should obtain a valid state blaster's license within one year where applicable, after receiving NPS certification, or upon transfer to a unit in another state which issues a state license. All licensed blasters must possess a current commercial drivers license with appropriate endorsements as well as a current medical examiners certificate.

Upon recommendation of the chief park blaster and approval of the regional safety manager and Service blasting officer, the regional blasting officer may issue a blaster's license for a specific length of time—not to exceed the duration of original certification—to a person whose exceptional or specific experience and training qualifies them to conduct blasting operations. A written examination shall be required, and familiarity with NPS Blasting Policy proven. Note: (Blaster) Included under general/level 3 license authorization.

Trainee

Entry-level program participant. A person who has met the requirements of 40 hours of NPS Explosives and Blasting Safety Training, but lacks the experience to qualify for blaster certification. The blaster-in-training must work directly under the supervision of a licensed NPS Blaster, and be provided qualifying experience within three years. If qualifying experience is not obtained, certification will lapse. The chief park blaster must recommend the trainee for blaster status, and may recommend that additional experience be obtained prior to the issuance of blaster certification.

Explosives Handler

A person who has successfully met the requirements of the explosives handler portion of NPS Explosives and Blasting Safety Training. An explosives handler can transport and/or store explosives and may participate in blasting operations under the direct supervision of a licensed NPS blaster, but in no case shall prime, load, connect, or initiate any blast. Note: (Explosive handler) Include under trainee authorization.

Magazine Operator

A person certified and designated by the chief park blaster to manage and be responsible for permanent explosives storage magazines. A trainee/handler/magazine operator will be carded under the trainee authorized for storage and transportation. Must have a minimum of 8 hours in explosive storage and does not require a C.D.L. Note: (Magazine operator) Include under trainee authorization.

Blasting Inspector

Either park, regional or DSC personnel assigned as inspector or contracting officer's representative (COR) on a NPS contract in which blasting is involved. Blasting inspectors shall have completed a minimum of 40 hours of NPS Explosives Safety or DSC Blasting Inspection Training, and must be certified as a blasting inspector by the DSC or Regional Blasting Officer, as appropriate.

Explosives Instructor

A knowledgeable and experienced NPS Blaster with the proven ability to effectively instruct technical courses and to examine persons for technical competency, recommended by the regional blasting officer and certified by the National Park Service blasting officer. Only an instructor certified for specialty courses may instruct and recommend licensing for those specialties. Instructor ratings are: explosives handler, blaster, and

specific specialties. Explosives instructor will receive a memo format for his/her records. This *instructor* designation will not be issued in a card format, but will be kept on record in the Service blaster's files.

To become instructor-rated, the person desiring the rating should inform their chief park blaster and regional blasting officer; the blasting officer can designate that person as an assistant instructor. Each instructor must serve as an assistant instructor for at least one class of the same level that they wish to instruct. The instructor supervising an assistant instructor shall give a thorough oral and written evaluation of performance, including recommendations for further improvement, and send a copy of the written evaluation to the regional blasting officer.

Blasting Inspection Instructor (Denver Service Center)

Nominated by the DSC blasting officer, appointed by the DSC safety officer with approval of the DSC Manager, and certified by the Service blasting officer, shall have not less than 80 hours of training in blasting safety, materials, methods and techniques (including 40 hours of NPS Explosives and Blasting Safety Training), and extensive field experience on projects which include significant blasting operations.

Assistant Instructor

May be recommended by a chief park blaster or explosives instructor, is appointed by the regional blasting officer, and is currently licensed as a NPS blaster. The assistant instructor shall, prior to assisting in class instruction, author and submit for review to the supervising instructor and regional blasting officer a complete set of class lecture notes appropriate for the level of class for which the instructor rating is sought.

The same procedures shall apply to assistant instructors for blasting inspection classes, with recommendation by a chief, branch of construction, or instructor, appointment by the DSC blasting officer, and current certification as a NPS Blasting Inspector.

TRAINING

General explosives and blasting safety

Classes shall be no larger than stipulated by the supervising instructor for courses that include field operations, with a minimum of two instructors or one instructor and one assistant instructor. In no case shall an instructor or assistant instructor supervise more than five participants at one time in field operations. Each region in which blasting occurs annually should have at least two instructors. The regional blasting officer shall approve any explosives training conducted in that region. Standardized NPS explosives training courses shall include:

- **Explosives and Blasting Safety** – At a minimum, a 40-hour course, including eight hours of field exercises, thoroughly covering the subjects shown in the following section. For participants lacking prior experience, only ratings of *trainee* may result from course attendance. A minimum of a 24 hr recertification course is required at 3 year intervals for blasters who can demonstrate and document previous explosive training and experience,

- **Blasting Inspection (Denver Service Center)** – At a minimum, a 40-hour course, thoroughly covering the subjects shown in the next section, and designed to give a comprehensive view of materials, systems and methods to be checked in determining compliance with safe blasting practices in contractors' operations.

- **Other Training** – As appropriate, courses or seminars of at least eight hours, covering specific blasting

topics (specialized blasting, problem areas, hazard analysis, and new product or other technology) may be held. The regional blasting officer shall distribute technical bulletins to all park blasters as necessary to stay informed of new technology or information. The Service blasting officer should review and evaluate the content of any proposed non-NPS training courses for relevance to NPS needs.

STANDARD TRAINING COURSES: MINIMUM CONTENTS

Initial Explosives and Blasting Safety Recertification 40 Hours

a. Terms and Definitions
b. Rules and Regulations, including NPS Blasting Program
c. Commercial Explosives - history, properties, uses
d. Detonators - history, properties, uses
e. Primers and Boosters
f. Safety Hazards - impact, heat, propagation, extraneous electricity, radio frequency energy, fumes
g. Personal Protective Equipment
h. Explosives Deterioration and Disposal
i. Transportation - vehicles
j. Storage and Inventory
k. Area Security and signal systems
l. Accident and theft procedures
m. Methods of initiation - systems, materials, equipment, testing
n. Loading, tamping, stemming
o. Safety hazards - flyrock, shot timing, misfires and hangfires, air blast, ground vibration
p. The Blaster - authority, responsibility, role as a risk factor
q. Basics of Blast Design, including NPS applications and environmental impacts
r. Reports and Records

Recertification - A Minimum 24 Hour Course

This course will include at least one full day of field exercises, structured around transport, field storage and inventory, area security, signal systems, blast design, load determination, priming, loading, hookup (electrical and detonating cord), detonation, post-blast check, flyrock prediction and control, and blast result analysis. This training will also cover new techniques and developments in the explosives industry. It will also include quizzes on each major subject and a written final exam in which a minimum score of 85 percent is required for successful course completion. The final exam should be in two parts: Part I to cover items (a) through (l), required for explosives handlers; Part II to cover items (m) through (r), required, along with Part I, for blasters-in-training and blasters.

Blasting Inspection (Denver Service Center)

a. Terms and Definition
b. NPS Blasting Program
c. Commercial Explosives - history, properties, uses, hazards
d. Detonators - history, properties, uses, hazards
e. Primers and Boosters - properties, uses, hazards
f. Detonation and Initiation Systems - theory, layout, testing
g. Borehole Blasting - theory, loading, testing, blast control

h. Unconfined Surface Blasting - theory, loading testing, blast control
i. Transportation of Explosives - DOT, OSHA, and NPS requirements
j. Storage of Explosives - BATF and OSHA Regulations, magazine construction, location, signing
k. Required Record Keeping - inventories, blast records
l. Safety Requirements - OSHA Standards, acceptable practices, guards, signals, signs, blasting mats, blast control, protection of persons and property.

CERTIFICATION

Certification (licensing) can be granted to NPS personnel at least 21 years old, and shall be based on final exam scores and field performance evaluation in required training courses (including an oral examination if deemed necessary by the instructor or certifier), and a written Experience Statement for Blaster Certification detailing previous experience (type, quantity, complexity). Proof of certification shall be a NPS blaster's card, upon which is shown the level of certification (Trainee-Level 1, General Fireline-Level 2, Rocks, Stumps, Ditches, 10 Holes, Clear Misfires = General Level 3, and Avalanche and Fireline Blasting/Wildfire specialties. Certification shall be valid for three years. Recertification shall be by retaking and successfully completing a 24 hour minimum Explosives and Blasting Safety Training. Specialty certifications are continuous providing a blaster certification is maintained. Instructor certification shall be valid for three years, and shall be renewed automatically if at least one class has been taught during that period. Notification of conducted training must be sent to the Service explosives officer upon completion of course taught. Certification may be extended by the appropriate regional or DSC blasting officer in exceptional circumstances, for a period not to exceed one year, if the applicant has been actively involved in blasting operations within the previous 24 months.

Any documented violation of safe practices, regulations or NPS policy shall be sufficient cause for immediate revocation of certification. Recertification shall then be possible only by successful completion of the full certification process, including three years as a blaster-in-training Any accident with or theft of explosives shall cause certification of the blaster-in-charge to be suspended pending the outcome of the Blasting Review Board. Appeals of revocations or suspensions of certification shall be directed to the Service blasting officer, whose decision shall be final.

The regional or DSC Blasting Officer, as appropriate, is the sole source of NPS certification, except that the Service blasting officer is the sole source of instructor certification. In a case where the regional or DSC blasting officer does not participate in the instruction of required training, certification shall be granted only upon the recommendation of both instructors. Employees must be certified by the regional or DSC blasting officer even though they may have obtained training an/or certification from another government or private source.

APPLICATION FOR EXPLOSIVES AND BLASTING CERTIFICATION - PART I

Date _____

General Information

Applicant's Name _____

Agency/Unit _____

SSN _____ *Birth date* _____ *Height* _____ *Weight* ____

State License # _____

Work Address
Zip _____

Work Electric Mail
Address _____

Work Telephone Number _____ *Fax*
Number _____

1. Describe in detail your experience in blasting operations and activities using explosives and blasting materials. Identify entries by month/day/year.

2. *Do you possess the following certificates?*

Commercial Drivers License with Hazardous Materials Endorsement

( )Yes ( )No Expires __ / __ / __
MM DD YY

Medical Examiners Certificate

( )Yes ( )NO Expires __ / __ / __
MM DD YY

(Figure 1-2) Certification application -part I

APPLICATION FOR EXPLOSIVES AND BLASTING CERTIFICATION - PART 111

Agency _____ Unit _____
Name _____

Position/Title _____
Address _____

Work Authorization Levels	Applying-Renewal-Experience- For (X)	Yes/No	(Months)	Do you - feel qualified	RB
Initials					
GENERAL BLASTING					
Level 1: Trainee-Store and transport only					
Level 2: Load, wire, test, and shoot 10 holes					
Shoot stumps and ditches					
Clear misfires					
Use Delays, EBC, or det cord TYpe					
Use non-elect firing line and detonators					
Use exploding bridgewire systems					
Level 3: Load, wire, test, and shoot 40+ holes					
Quarries					
Wildlife ponds					
Destroy excess explosives/blasting materials					
Hazard tree blasting					
Seismic					
Other (Specify)					
Lead Blaster					
FIELINE-PRESCRIBED					
Fireline crewmember: Store and transport only					
Line construction/project fires					
Clear misfires					
Destroy excess explosives and blasting materials					
Use exploding bridgewire systems					
Blast hot landing zones					
Wire and test circuits					
Fireline Blaster Examiner					
FIRELINE-WILDFIRE (Requires a Step Test score of 45)					
Fireline Explosives Crewmenber (FLEC)					
Fireline Explosives Blaster-Initial Attack (FLEI)					
Fireline Explosives Blaster-in-Charge (FLEB)					
Fireline Explosives Blaster Advisor (FLEA)					
Hazard tree blasting					
ALANCHE/GUNNER OPERATIONS					
Avalanche Blaster-in-Training					
75mm howitzer					
105mm howitzer					
75mm recoilless rifle					
105mm recoilless rifle					
106mm recoilless rifle					
Avalauncher					
Other (Specify)					

(Figure 1-3) Certification application - Part III.

EXPLOSIVES AND BLASTING CERTIFICATION REQUIREMENTS

To Certify or re-certify, possess the following certificates and Licenses, and meet the indicated requirements for each certification level.

	Ava- lanche 3	-Fireline Prescribed	Fireline Wildfir	CERTIFICATIOM LEVELS Trainee	Blaster- Level 1	General Blaster Level 2	-General- Blaster Level	Lead Blaster	-Blaster Examiner
Hazard Communication Standard (Employee Right-to-Know	****	****	****	****	****	****	****	****	****
First Aid Course	****	****	****	****	****	****	****	****	****
Commercial Driver's License (CDL)				****	****	****	****	****	****
Hazardous Materials Endorsement				****	****	****	****	****	****
Medical Examiners Certificate				****	****	****	****	****	****
Hazardous Materials Course (49 CFR 172)				****	****	****	****	****	****
Every three years attend a 16 hour min classroom training on using, storing, and transporting explosives and blasting materials				****	****	****			
Pass 8 hours field practical exercise/ test				****	****	****			
Pass written examination				****	****	****			
Pass oral examination				****	****	****			
Do 1 year min. field work with a min of 3 shots and have the recommendation of lead blaster					****	****			
Present shot records since last certification				****	****	****	****	****	****
Shoot a min of 3 shots per year				****	****	****	****	****	****
Attend a yearly Lead blaster's workshop							****		
Participate in Blasters' workshops (Cer- tification) Pass avalanche school							****		
Pass avalanche school training	****								
Pass military weapons	****								
Pass yearly milweaps 8 hour refresher	****								
Pass national fireline explosives training		****	****						
Pass yearly refresher			****						
Shoot 3 shots on going wildfire			****						
Work with and be recommended by master performer/lead blaster for: Stumps					****				
Ditches					****				
Misfires					****				
Delays					****				
Non-Electric Systems					****				
Exploding Bridgewire					****				
40+ Holes							****		
Quarries							****		
Wildfire Ponds							****		
Hazard Tree Blasting							****		
Seismic		****	****				****		
Other					****		****		

**** Indicates requirements for each certification level

(Figure 1-4) Blasting and explosives certification requirements

BLASTING REVIEW BOARD

A Blasting Review Board shall be formed of selected personnel, including the chief park blaster, by the regional or DSC blasting officer and regional or DSC safety officer, to investigate the circumstances (including technical blast analysis) of any explosives accident leading to injury, fatality, or property damage over 100 dollars, or any case of theft or loss of explosives. A written record, including recommendations, shall be maintained and sent to the Service blasting officer and others as appropriate. In the case of an accident, a general case incident record shall be developed and circulated to inform other blasters so that a reoccurrence can be prevented. If the Board's findings indicate that the blaster-in-charge or responsible explosives handler was not in conformance with this policy and its provisions, revocation of certification is mandatory.

The findings of a Blasting Review Board shall be made available to any Board of Inquiry formed by the superintendent to investigate the same incident. The formation of a Board of Inquiry that results from blasting operations not otherwise covered under this section shall result in the formation of a Blasting Review Board.

SPECIFICATION FOR CONTRACTS

General

Description: The work of this section consists of all activities that relate to explosives, including receiving, handling, transporting, storing, distributing, priming, loading, firing, and disposal.

Quality Assurance

A. Regulatory Agencies: All operations with explosives shall be conducted in accordance with the NPS Explosives Use and Blasting Program and the rules and regulations established by the Occupational Safety and Health Administration (OSHA) contained in 29 CFR 1910 and 1926, Construction Safety. In addition, the contractor shall comply with Department of Transportation rules and regulations contained in 14 CFR 103, Air Transportation; 46 CFR 146-149, Water Carriers; 49 CFR 390-397, Motor Carriers; and Bureau of Alcohol, Tobacco and Firearms (BATF) regulations contained in 27 CFR 55, Commerce in Explosives.

B. Legal Requirements: Comply with all applicable Federal, State and local laws pertaining to the purchase, transportation, storage, handling and use of explosives. Obtain all required permits and licenses.

Submittals

Blasting Plan: Submit a blasting plan covering qualifications of blaster-in-charge and blasting crew; transportation; storage and magazines; blast site operations; area security plan, including signal system; handling of misfires; removal and disposal of unused or excess explosives; and blast records.

Note: All submittals will include under product selection, that no cap and fuse and/or nitroglycerin products may be used within National Park Service area boundaries.

Blaster-in-Charge Qualifications

Must possess a valid state blaster's license or other license issued by an equivalent licensing body acceptable to the contracting officer.

Must submit written resume showing not less than three years of active involvement as blaster-in-charge on projects similar in scope to this contract.

Must submit a list of five references who can testify to the known qualifications and reliability of the proposed blaster-in-charge.

Blasting Crew Qualifications

All crew members must have completed explosives and blasting safety training of at least 24 hours and/or have not less than one year of experience acceptable to the contracting officer.

Transportation Plan

Include description and license number of vehicle to be used, route(s) to be traveled, proposed hours of travel, and qualifications of driver.

Storage and Magazines

Show location and construction of magazines and day-boxes, inventory system to be used, and signing installed.

Blast Site Operations

Include type of explosives to be used, initiation system to be utilized, drilling system, loading plan, firing plan, pre-blast and post-blast inspection, handling of misfires, and removal and disposal of excess explosives.

Area Security Plan

Include proposed signing, guard system, signal system, methods of communication, and pre-blast notification of affected agencies or entities.

Permits and Licenses

Submit copies, or other proof acceptable to the contracting officer, of all applicable permits and licenses, including blasting liability insurance.

Contracting Officer's Approval

The contracting officer will indicate approval or disapproval of each submittal and reasons for disapproval. When submittals have been approved, the number of copies the contractor wants for his own use will be returned. No work shall be done before approval is received.

Project Conditions

Protection: The safety of personnel shall be the controlling consideration in decisions involving explosives activities. The contractor shall exercise the utmost care not to endanger life and property. Make proper use of blasting mats and other protective devices, adopting whatever additional precautions are deemed necessary to prevent damage to trees, shrubs, other landscape features, buildings, utilities, monuments, and other structures. Make every effort to prevent damage to the natural and the constructed surroundings. Should damage occur, make restoration as required by the contracting officer at no additional cost to the government.

BLASTING RECORDS

The federal government requires that records are kept of the blasting caps and explosives used.

For insurance purposes, good records of each and every shot should be maintained. Most distributors of explosives will furnish on request “Blasting Logs” that contain guidelines for good record keeping. A form should be made available that includes the following:

1. Job number and location.
2. Date.
3. Time of each shot.

5. Pounds of explosives used, weight and diameter of each stick.
6. Remarks section to record any unusual circumstances that may have occurred during the blasting sequence or as a result of blasting. (i.e., rock on house, private damage.)
7. Place for the signature of the blaster.

Date:_____ Location:_____

Hole No. Vertical ☐ Horizontal ☐ Diameter in.	Height of Face (Ft.)	Depth of Hole (Ft.)	Spacing (Ft.)	Burden (Ft.)	Explosives Grade Pounds	Grade Pounds	Grade Pounds	Total per Hole	Stemming (Ft.)	Type Detonator	Delay Period

Time Loading Started_____ Finished_____ Fired_____
Type of Blasting Machine_____
Loading Wire_____ Connecting Wire_____
Plan of Connections_____

Identify Job Location by station or dimension to known structure or object. Show North Point.

REMARKS: (If blast was seismic recorded state by whom):

(Figure 1-5) Blast Report form.

PROPER TOOLS FOR GOOD BLASTING

In order to do a good, safe job of blasting, a blaster must have the right equipment. The following represents a minimum:

A. Proper Shooting Wire - A minimum of 500 feet of solid conductor copper wire is recommended. Stranded wire is not acceptable and should not be used. A blasting wire reel, enabling a blaster to level wind his shooting wire, increases the life span of the wire considerably.

B. **Blaster Galvanometer** - A Galvanometer or blasters ohmmeter should be used to check each cap prior to stemming the hole, and to check all wiring used in the blasting circuit, before attempting to detonate.

C. **Blasting Machine** - OSHA requires an approved blasting machine be used as the power source for the initiation of all electric blasting circuits.

1. Rack Bar
2. Capacitor Discharge
3. Generator
4. Radio Remote detonation System

E. **Wire Strippers** and **Sharp Knife**.

D. Blasting Mats - Mats should be used in any instance where flyrock can do damage to life or property.

F. Tamping Pole - Preferably marked in feet that will enable blaster to measure depth of each hole, column buildup and depth of stemming material, as well as for tamping.

G. Blasters tool kit - Extra batteries, electricians tape, screw drivers, cap crimpers, wire strippers, first-aid kit, knives, and other tools of the trade.

JOB SAFETY ANALYSIS	1. JOB TITLE /LOCATION All Explosives Related Activities	2. DATE:1/06/99	x NEW ☐ REVISED
INSTRUCTIONS ON REVERSE SIDE	3. TITLE OF PERSON WHO DOES JOB: Blaster in Charge & Trained Personnel	4. NAME OF COMPANY/ORGANIZATION: RMNP	ANALYSIS BY:
5. PLANT/LOCATION Rocky Mountain National Park	6. DEPARTMENT: Maintenance/Roads-Fleet	10. SUPERVISOR J. Leons	REVIEWED BY:
REQUIRED AND/OR RECOMMENDED PERSONAL PROTECTIVE EQUIPMENT: Hard hat required			APPROVED BY:

7. SEQUENCE OF BASIC JOB STEPS	8. POTENTIAL HAZARDS	9. RECOMMENDED ACTION OR PROCEDURE
PLANNING AND PRE-WORK	Lack of emergency evacuation plans, blast plans and safety briefings.	-Size up the area ahead of time. Develop emergency evacuation plan in case of injury that considers communications, transportation, first aid, and who is responsible for each task. Conduct safety and health sessions, establish personal protective equipment (PPE) needed and have all plans finalized before going to the field. Follow up and modify plans as necessary or needed.
STORAGE AND TRANSPORT OF EXPLOSIVES	Improper storage and transport of explosives could lead to unplanned detonation.	-As a minimum, obtain and reference the following publication; *National Park Service Guide for the Storage, Transportation, Training of Explosives Use, and Handling of Explosives*. Have all required documents in vehicle when transporting.
DRILLING (NOTE, specialty explosive operation will fill out a separate JSA)	Drilling into explosives. Breathing dust fumes. Personal injury from moving parts of the drill or falling rocks. Eye injury from rock chips. Back injury from lifting. Noise exposure.	-NEVER DRILL IN AN EXISTING BOREHOLE WHICH MAY CONTAIN EXPLOSIVES! NEVER DRILL INTO A BOOTLEG! Wear dust mask when drilling. Wear leather field boots that protect the feet from the drill bit. Lift the drill with legs, not your back. Use a back brace if needed. (optional) Wear eye protection, ear protection, leather gloves, and a hard hat. Some drilling locations may require a rope and harness to prevent falls. Use a spotter in areas of loose rock and debris.
BLASTING TEAM EXPOSURE TO ELEMENTS	Exposure to sun, insect bites, snakes, rugged terrain.	-On hot days apply sunscreen. Watch for signs of heat stroke during summer, or hypothermia during adverse weather conditions. Use insect repellant if needed. Wear long sleeves shirts, full-length trousers and leather gloves when appropriate.
HANDLING EXPLOSIVES / MAKING PRIMERS AND MISFIRES.	Misfire, Accidental detonation, Exposure to Elements.	-Handle explosives with extreme care, observing all instructions included in each box of explosives and caps. Don't make up primers next to truck containing explosives. Place hands on ground for 5 seconds before handling electric detonators. No smoking within 50' and no sparking tools allowed. Be aware of potential desensitizing of product from exposure to elements. Hard hat required. Follow NPS-65 on misfire SOP.
LOADING HOLES WITH EXPLOSIVES	Misfire, Accidental detonation	-Do not tamp primer. Follow the "Always and never" instructions contained in each box of explosives and caps. Follow manufacturers instructions. Double check that all holes are tied into shot. Use insensitive explosives. Allow no smoking or mechanized equipment within 50 feet of holes. Hard hat required. Follow NPS-65 on misfire SOP
GUARDING THE SHOT	Inadequate guarding could result in unauthorized people entering blast area.	-Post appropriate signs and guards around the perimeter of each shot. Give loud verbal warning prior to shot. For large construction sites and quarries use signal devices such as air horns to warn those in vicinity. Maintain communications with all guards, "positive-response", using radios if needed. Hard hat required. Follow NPS-65 on misfire SOP.
FIRING THE SHOT	Premature firing, misfires, and partial detonation.	-The "Blaster-in-Charge" controls the blast initiation device. Check for proper resistance in EBC series. Use EBW's or Non-EL blast system when electromagnetic radiation or extraneous electricity is present. (Radio transmitters, radar, high voltage electric lines, blowing dust or snow, etc.) Immediately vacate and guard site if lightning approaches. Hard hat required. Follow NPS-65 on misfire SOP

JSA Instructions

The JSA shall identify the location of the work project or activity, the name of employee(s) writing the JSA, the date(s) of development, and the name of the appropriate line officer approving it. The supervisor acknowledges that employees have read and understand the contents, have received the required training, and are qualified to perform the work project or activity.

Blocks 1, 2, 3, 4, 5, and 6: Self-explanatory

Block 7: Identify all tasks and procedures associated with the work project or activity that have potential to cause injury or illness to personnel and damage to property or material. Include emergency evacuation procedures (EEP).

Block 8: Identify all known or suspect hazards associated with each respective task/procedure listed in block 7. For example:

a. Research past accidents/incidents.
b. Research the Health and Safety Code or other appropriate literature.
c. Discuss the work project/activity with participants
d. Observe the work project/activity
e. A combination of the above

Block 9: Identify appropriate actions to reduce or eliminate the hazards identified in block 8. Abatement measures listed below are in the order of the preferred abatement method:

a. Engineering Controls (the most desirable method of abatement). For example, ergonomically designed tools, equipment and furniture.
b. Substitution. For example, switching to high flash point, non-toxic solvents.
c. Administrative Controls. For example, limiting exposure by reducing the work schedule.
d. Personal Protective Equipment (PPE) (least desirable method of abatement). For example, using hearing protection when working with or close to portable machines (chain saws, rock drills, portable water pumps)
e. A combination of the above.

Block 10: The JSA must be reviewed and approved by a supervisor.

Emergency Evacuation Instructions

Work supervisors and crew members are responsible for developing and discussing field emergency evacuation procedures (EEP) and alternatives in the event a person(s) becomes seriously ill or injured at the work site.

Be prepared to provide the following information:

a. Nature of the accident or injury (avoid using victim's name).
b. Type of assistance needed, if any (ground, air or water evacuation).
c. Location of accident or injury, best access route into the work site (road name/number), identifiable ground/air landmarks.
d. Radio frequency(s).
e. Contact person.
f. Local hazards to ground vehicles or aviation.
g. Weather conditions (wind speed & direction, visibility, temp).
h. Topography.
i. Number of person(s) to be transported
j. Estimated weight of passengers for air/water evacuation.

The items listed above serve only as guidelines for the development of emergency evacuation procedures.

JSA and Emergency Evacuation Procedures Acknowledgement

As supervisor I acknowledge that the following employees have participated in the development of this JSA, accompanying evacuation procedures and have also been briefed on the provisions thereof:

Supervisor's Signature: _____

_____

_____

Chapter 2
EXPLOSIVES

This chapter classifies commercial blasting compounds according to their explosive class and type. Initiating devices are listed and described as well. Military explosives are treated separately. The ingredients and more significant properties of each explosive are tabulated and briefly discussed. Data are summarized from various handbooks, textbooks, and manufacturers' technical data sheets.

THEORY OF EXPLOSIVES

In general, an explosive has four basic characteristics: (1) It is a chemical compound or mixture ignited by heat, shock, impact, friction, or a combination of these conditions; (2) Upon ignition, it decomposes rapidly in a detonation; (3) There is a rapid release of heat and large quantities of high-pressure gases that expand rapidly with sufficient force to overcome confining forces; and (4) The energy released by the detonation of explosives produces four basic effects; (a) rock fragmentation; (b) rock displacement; (c) ground vibration; and (d) air blast.

A general theory of explosives is that the detonation of the explosives charge causes a high-velocity shock wave and a tremendous release of gas. The shock wave cracks and crushes the rock near the explosives and creates thousands of cracks in the rock. These cracks are then filled with the expanding gases. The gases continue to fill and expand the cracks until the gas pressure is too weak to expand the cracks any further, or are vented from the rock.

The ingredients in explosives manufactured are classified as:

Explosive bases. An explosive base is a solid or a liquid which, upon application or heat or shock, breaks down very rapidly into gaseous products, with an accompanying release of heat energy. Nitroglycerine is an example.

Combustibles. A combustible combines with excess oxygen in an explosive to achieve oxygen balance, to prevent the formation of nitrous oxides (toxic fumes), and to lower the heat of the explosion.

Oxygen carriers. Oxygen carriers assure complete oxidation of the carbon in the explosive mixture, which inhibits the formation of carbon monoxide. The oxygen carriers assist in preventing a lowering of the exploding temperature. A lower heat of explosion means a lower energy output and thereby less efficient blasting.

Antacids. Antacids are added to an explosive compound to increase its long term storage life, and to reduce the acidic value of the explosive base, particularly nitroglycerin (NG).

Absorbents. Absorbents are used in dynamite to hold the explosive base from exudation, seepage, and settlement to the bottom of the cartridge or container. Sawdust, rice hulls, nut shells, and wood meal are often used as absorbents.

Antifreeze. Antifreeze is used to lower the freezing point of the explosive.

Air gap sensitivity. Air gap sensitivity is a measure of an explosive's cartridge-to-cartridge sensitivity to detonation, under test conditions, expressed as the distance through air at which a primed half-cartridge (donor) will reliably detonate an unprimed half-cartridge (receptor).

Cap Sensitivity. Cap sensitivity is a measure of the minimum energy, pressure, or power required for initiation of a detonation; i.e., "cannot be detonated by means of a No. 8 test blasting cap when unconfined."

Strength Two strength ratings are used for commercial dynamites. Weight strength compares products on an equal-weight basis, and cartridge strength or bulk strength compares products on an equal-volume basis. Both are expressed in percent, using straight nitroglycerin dynamite as a standard. Complicating this picture is the variety of ingredient mixes among manufacturers, so that 40 percent gelatin dynamite and a 40 percent ammonia dynamite do their work differently; similarly, a 40 percent ammonia dynamite from two different manufacturers will give somewhat different results. Thus, a blaster who had always used one manufacturer's product could change suppliers and suddenly start complaining about "bad powder." To further confuse the issue, some manufacturers continue to use the terms "weight strength" and "bulk strength" as a comparative numerical rating against ANFO at 100.

With the advent of new explosives, particularly the ANFOs and the slurries, the dynamite method of judging strength failed to give relevant data. It became necessary to account not only for a product's relative stored energy, but also its rate of energy release, its gas volume potential, and its heat of detonation. A number of factors are currently used to judge an explosive's ability to do the work desired, and today's blaster must consider at least the following:

Detonation Pressure is a measure of the product's shock wave energy, influenced by the product's density (latent energy) and detonation velocity (rate of energy release).

Pressure Magnitude or **Gas Pressure** is a measure of the potential expanding-gas energy, influenced by the product's density (latent gas volume) and the heat and velocity of detonation (rate of gas production and expansion).

Though oversimplified, one way to think of "strength" is to compare an explosive to a mechanical means of breaking and moving rock. We can break rock with a sledgehammer, and a detonation pressure is our explosive hammer. As density increases, the "weight of the hammer" increases; as velocity increases, we "swing the hammer" faster and harder. We can move rock with a bulldozer, and gas pressure is our explosive dozer. As density increases, the dozer gets bigger; as velocity increases, the dozer runs faster—sometimes so fast that it

outruns the rock it is trying to move.

BLASTING MECHANICS

Upon detonation, explosives affect rock by various interrelated means. While the following discussion simplifies a complex and (in some aspects) largely theoretical subject, it should provide a basic grasp of blast mechanics. The same mechanisms apply to whatever material is being blasted (wood, concrete, steel, soil, ice, etc.); however, results are highly dependent on material integrity. As a result, this discussion will consider only monolithic bedrock in order to avoid confusion.

1. Detonation Shock Wave

Upon initiation, the detonation (explosive oxidation) zone proceeds down the column of explosive at the product's detonation velocity. At the front of this detonation zone, an energy pulse or "shock wave" is generated and transmitted to the adjacent rock; any air space between the explosive and the rock absorbs wave energy and reduces its effect on the rock.

The shock wave travels outward as a compression wave in all directions from the borehole, moving at or near detonation velocity. The rock immediately surrounding the borehole is crushed to some extent, dependent on how much the force of the wave exceeds the compression strength of the rock. The force of the wave overcomes the elastic limits of the rock, causing it to bend outward and crack. These are radial cracks in that they radiate out from the borehole and they are generated at speeds related to the sonic velocity of the rock itself (+/–8,000 fps in hard rock, +/–1,500 fps in soft rock). If the rock mass is too large to permit bending, such as behind the borehole, no radial fracture occurs; the wave energy is simply absorbed by the rock.

2. Shock Wave Reflection

At this point, the result of the blast will only be very large wedge-shaped blocks, still interlocked. However, when the shock wave reaches a free face, the outward-bending compressive force releases, and the wave is reflected back into the rock as a tension wave. The speed of the shock wave has been slowed somewhat, and its energy lowered, but if the distance from the borehole to the free face is not too great, it still carries enough force to overcome the tensile strength of the rock.

Rock, like concrete, has far greater strength in compression than in tension (for instance, granite with a compression strength of 30,000 psi has a tensile strength of only 1200 psi). The reflected tension wave causes lateral cracking in the rock between the radial cracks, creating "fragmentation." Obviously, the greater the distance between the borehole and the free face, the more the wave energy is used along the way, and the larger those "fragments" will be. If there is no free face, such as behind the borehole, there will be no wave reflection and no lateral cracking. A point to remember is that any break in rock continuity will act as a free face; a crack or weather seam is as good as a quarry face in this regard.

3. Gas Pressure and Rock Movement

Upon detonation, along with the shock wave, the solid explosive is instantly converted to superheated gas that is trying to occupy a space 10,000 to 20,000 times its original solid volume, and exerting a pressure that can exceed 1.5 million psi. Without this gas pressure, the fractured rock would not move and would remain interlocked.

The fractured rock mass has a certain inertia (consider this a desire to stay where it is), which the gas pressure must initially overcome to start rock movement. Thus, there is "hesitation" between detonation and the start of rock movement, lasting roughly one millisecond per foot of distance between the borehole

and the free face (i.e., if the distance is 10 feet, movement will start roughly 10 milliseconds after detonation). Once inertia is overcome, the rock moves outward away from the borehole at around one foot each 10 milliseconds, or between 40 and 70 mph, although smaller fragments can move faster and be shot out as flyrock. As with the detonation shock wave, nice even results in rock movement require rock continuity; cracks and weather seams will allow gas venting, and result in uneven and sometimes surprising directions and distances of rock throw.

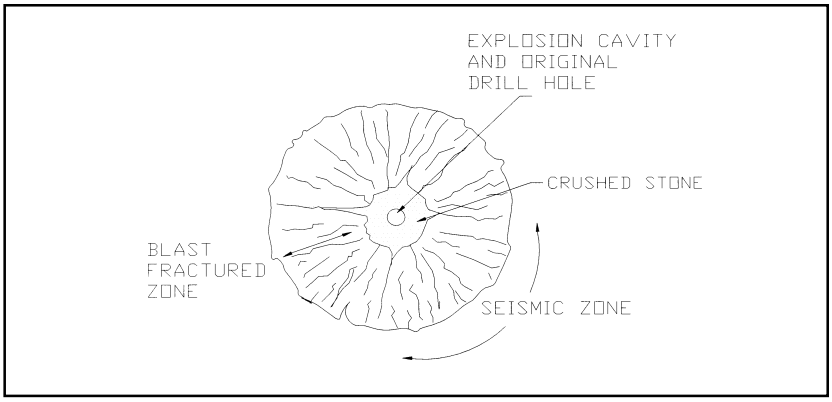

(Figure 2-1) The mechanics of blasting.

Detonation Velocity

Detonation velocity is an important property to consider when rating an explosive. It may be expressed as a confined or unconfined value and is normally given in feet per second (fps). The confined detonation velocity measures the speed at which the detonation wave travels through a column of explosive within a borehole or other confined space. The unconfined velocity indicates this rate when the explosive is detonated in the open. Because explosives generally are used under some degree of confinement, the confined value is more significant. Most manufacturers, however, measure detonation velocity in an unconfined column of explosive 1 1/4 inches in diameter, although some measurements are made within the confinement of an iron pipe or using a different diameter.

The confined detonation velocity of commercial explosives varies from 5000 to 25,000 fps (Tables 2-1 through 2-6). With cartridge explosives, the confined velocity is seldom attained because complete confinement is usually impossible. For blasting in hard rock, a high-velocity explosive is preferable. In a softer or highly jointed rock, a low-velocity explosive , for example,(ANFO) with a heaving action may give satisfactory results at a lower cost. Some explosives, and particularly blasting agents, are more sensitive to diameter changes than others. In charges with larger diameters, say six inches or more, the velocity may be medium to high. But as diameters get smaller, the velocity is reduced until, at the blasting agent's critical diameter,(approximately three inches for ANFO, propagation is no longer assured and misfires are likely).

PROPERTIES OF EXPLOSIVES

By knowing what properties are critical to performance, meaningful predictions can be made in blast design. These properties are: detonation velocity, density, detonation pressure, water resistance, and fume class. For a given explosive, these properties vary with the manufacturer.

Density

The density of an explosive may be expressed in terms of specific gravity. Specific gravity is the ratio of the density of the explosive to the density of water under standard conditions. The specific gravity of commercial explosives ranges from 0.6 to 1.7 g/cc. For free running explosives, the density is often specified as the pounds of explosives per foot of charge length in a given size borehole. With few exceptions, denser explosives give higher detonation velocities and pressures.

Density is an important consideration when choosing an explosive. For difficult blasting conditions or where fine fragmentation is required, a dense explosive is usually necessary. In easily fragmented rock or where fine fragmentation is not needed, a low-density explosive will often suffice. Low-density explosives are particularly useful in the production of riprap or other coarse products. The density of an explosive is also important when working under wet conditions. An explosive with a specific gravity of less than 1.0 will not sink in water.

Weight strength (percent)	Cartridge strength (percent)	Density	Confined velocity (VOD)(fps)	Water resistance	Fume class*	Cartridge count
60	52	1.3	12,500	Fair	Good	110
50	45	1.3	11,500	Fair	Good	110
40	35	1.3	10,500	Fair	Good	110
30	25	1.3	9,000	Fair	Good	110
20	15	1.3	8,000	Fair	Good	110

(Figure 2-2) Properties of a high-density ammonia dynamite.

Weight strength (percent)	Cartridge strength (percent)	Density	Confined velocity (VOD)(fps)	Water resistance	Fume class*	Cartridge count
65	50	1.2	8,100	Fair	Fair	120
65	45	1.1	7,800	Poor	Fair	129
65	40	1.0	7,500	Poor	Fair	135
65	35	1.0	7,200	Poor	Fair	141
65	30	.9	6,900	Poor	Fair	153
65	25	.9	6,500	Poor	Fair	163
65	20	.8	6,300	Poor	Fair	174

(Table 2-3) Properties of a low-density ammonia dynamite, low-velocity series.

Product	Density g/cc	Velocity ft/sec	Water Resistance	Fume Class	Shelf Life
Thermex Y	1.22	20,000	Package only	1	1
Kinestick	1.1	18,000	Package only	1	1

(Figure 2-4) Properties of two-component explosives.

Detonation and Borehole Pressure

Detonation pressure is a function of the detonation velocity and density of an explosive. The nomograph (Figure 2-2) can be used to approximate the detonation pressure of an explosive when the detonation velocity and specific gravity are known. As can be seen, the detonation pressure is more dependent on detonation velocity than specific gravity. A high detonation pressure is necessary when blasting hard, dense rock. In softer rock, a lower pressure is sufficient. Detonation pressures of explosives range from 10 to over 140 Kilobars (l Kilobar = 14,504 psi).

Water Resistance

An explosive's water resistance is a measure of its ability to withstand exposure to water without deteriorating or losing sensitivity. Sensitivity is the ease with which an explosive detonates.

In dry work, water resistance is of no consequence. If water is standing in the borehole, and the time between loading and firing is fairly short, an explosive with a water-resistance rating of "good" is sufficient. If the exposure is prolonged, or if the water is percolating through the borehole, "very good" to excellent" water resistance is required.

In general, gelatins and emulsions offer the best water resistance. Higher-density explosives have fair to excellent water resistance, whereas low-density explosives and blasting agents have little or none. Brown nitrogen oxide fumes from a blast often mean the explosive has deteriorated from exposure to water.

Fume Class

Ideally, detonation of a commercial explosive produces water vapor, carbon dioxide, and nitrogen. In addition, undesirable poisonous gases such as carbon monoxide and nitrogen oxides are usually formed. These gases are known as fumes, and the fume class of an explosive indicates the nature and quantity of the undesirable gases formed during detonation. Better ratings are given to explosives producing smaller amounts of fumes. For open work,
fumes are not usually an important factor, In confined spaces, however, the fume rating of an explosive is important. In any case, the blaster should ensure that everyone stays away from fumes generated in a shot. Carbon monoxide gradually destroys the brain and central nervous system, and nitrogen oxides immediately form nitric acid in the lungs.

Fume classes can be from poor to good and are rated Class A or B by the Bureau of Mines and class 1, 2, 3, by IME. Class A and Class 1 typically emit less noxious fumes per gram of explosive than Class B or Classes 2 or 3.

Shelf Life

Shelf lives of various products described are listed in their respective tables. For most explosives products, a shelf life of one year is recommended, although satisfactory performance can be expected from most products two, three, and even four years later. Consult the appropriate manufacturer to determine shelf life ratings beyond one year. *NPS-65* mandates a maximum shelf-storage of two years.

Permissibles or Permitted Explosives

A permissible explosive is one which has been approved by the U.S. Bureau of Mines or the British Ministry of Fuel and Power for the use in gas or dust-filled mines. When detonated or exploded, all explosives produce a flame that varies in volume, duration, and temperature.

Black powder produces the longest lasting flame, while dynamites typically produce a shorter lasting, but more intense flame. Permissible explosives are especially designed to produce a flame of low volume, short

Borehole diameter (inches)	Confined velocity (fps)	Loading density (lb/ft of borehole)
2	5,000 - 7,500	1.1 - 1.3
3	9,000 - 10,000	2.5 - 3.0
4	10,500 - 11,500	4.4 - 5.2
5	11,500 - 12,500	6.9 - 8.2
6	12,000 - 12,800	9.9 - 11.7
7	12,300 - 13,100	13.3 - 15.8
8	12,500 - 13,300	17.6 - 20.8
9	12,800 - 13,500	22.0 - 26.8
10	13,000 - 13,500	27.2 - 32.6
11	13,200 - 13,500	33.0 - 39.4
12	13,300 - 13,500	39.6 - 46.8

[1]Density: .85-.95 g/cc.
Water resistance: Packaging only; do not use under wet conditions.
Shelf life: 1 year (fuel oil begins to separate after 6 months and will stain bags.)

(Figure 2-5)

Product	Density g/cc	Velocity ft/sec	Water Resistance	Fume Class*	Shelf Life
Emulex 510	1.15	16,300	Excellent	1	No change after 1 year
Emulex 520	1.16	15,200	"	1	"
Emulex 710	1.19	18,000	"	1	"
Emulex 730	1.21	17,000	"	1	"
Emulex 750	1.35	19,000	"	1	"

(Figure 2-6) Properties of emulsion.

Product	Density g/cc	Velocity ft/sec	Water Resistance	Fume Class*	Shelf Life
Tovex 90	0.90	14.100	Good	1	1 year
Tovex 100	1.10	14,860	Excellent	1	"
Tovex 300	1.02	11,500	Good	A	"
Tovex 650	1.35	14,750	Excellent	1	"
Tovex 800	1.20	15,750	Excellent	1	"
Tovex T-1	0.25 lb/ft	22,000	Good	3	"

(Figure 2-7) Properties of water gels.

duration, and low temperature. This is accomplished by adding certain salts to the explosives formula in order to cool or quench the flame to prevent the ignition of gas or dust within the confined space of a mine.

Permissible explosives are generally modified types of emulsions, water-gels, or ammonia dynamites, all in cartridge or chub form.

CLASSIFICATION OF EXPLOSIVES

Low Explosives: Low explosives deflagrate rather than detonate. Their reaction velocities are 2000 to less than 3000 feet per second. Black powder is a good example. These materials normally have little water resistance, are highly flammable, sensitive to a No. 6 strength blasting cap, and have a heaving action during blasting. Low explosives generally do not fragment rock as well as high explosives.

Weight strength (percent)	Cartridge strength (percent)	Density	Confined velocity (VOD)(fps)	Water resistance	Fume class*	Cartridge count
60	60	1.3	19,000	Good	Poor	106
50	50	1.4	17,000	Fair	Poor	104
40	40	1.4	14,000	Fair	Poor	100
30	30	1.4	11,500	Poor	Poor	100
20	20	1.4	9,000	Poor	Poor	100

(Figure 2-8) Properties of a straight nitroglycerin dynamite.

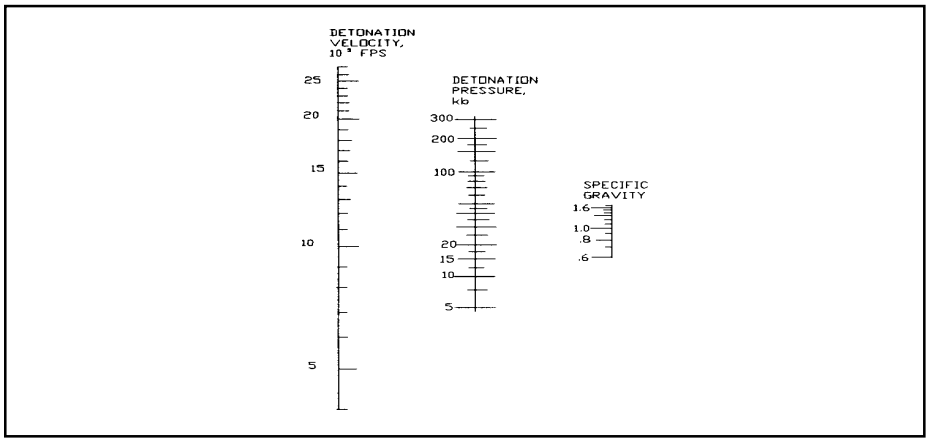

(Figure 2-9) Nomagraph for finding detonation pressure.

High Explosives: A high explosive is any chemical mixture that detonates with a reaction velocity over 5000 feet per second. The reaction can be initiated by a No. 8 strength blasting cap (i.e., high explosives are 1. Straight Dynamite - Nitroglycerin in an absorbent, with velocities between 10,000 and 20,000 feet per second. This dynamite is the most sensitive of all commercial explosives. The weight strength is the actual percentage of nitroglycerin in the cartridge. This explosive has poor fumes, good water resistance, and poor cohesion.

2. Ammonia Dynamite - This is similar to straight dynamite except that ammonium and/or sodium nitrate and various carbonaceous fuels are substituted for a portion of the nitroglycerin. There are three subclasses of ammonia dynamite:
   High Density: This product has a detonation velocity of 8000 to 13,000 feet per second, good water resistance, and fair to good fumes.
   Low Density: This product has detonation velocities between 7,000 and 11,000 feet per second, fair to good fumes and fair to poor water resistance.
   Permissible Types: These products are similar to the low- density ammonia dynamites except that they contain cooling salts such as sodium chloride. Permissibles must be approved by the U.S. Bureau of Mines under specified conditions of usage. This material usually has good fumes and fair to poor water resistance.

3. Gelatin Dynamite - Contains nitroglycerin gelled with nitrocellulose, and various absorbent filler materials. Forms a soupy to rubber-like mixture which is water-resistant.
   (a) *Straight Gelatin* - Has a detonation velocity of 13,000 to 23,000 feet per second. Varieties with strength rating above 60 percent have poor fume characteristics. Water resistance is excellent and material is very cohesive.
   (b) *Ammonia or Special Gelatins* - Similar in composition to straight gelatin except that some of the nitroglycerin is replaced with ammonium and sodium nitrates and carbonaceous fuels. Has a detonation velocity between 10,000 and 23,000 feet per second. Water resistance is good.

4. Semi-gelatin Dynamite - A combination of ammonia gelatin and ammonia dynamite, with lower strength than gelatin, yet has good water resistance. Velocities between 10,000 and 15,000 feet per second. Fume rating is good.

Two-component Explosives: These, as packaged, can be shipped by any means because each separate component is nonexplosive. Mixing, however, produces a class A explosive that must be handled and stored as such.

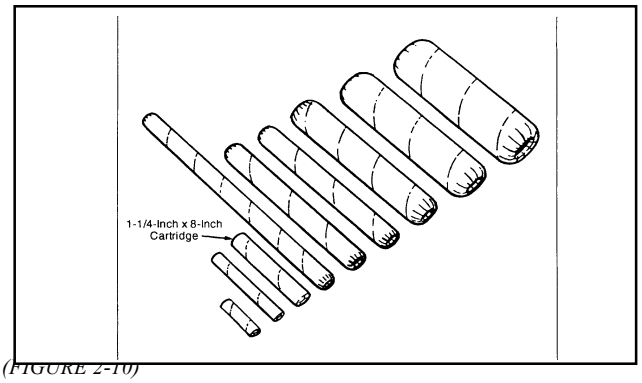

(FIGURE 2-10)

BLASTING AGENTS AND AMMONIUM NITRATE

A blasting agent is any material or mixture consisting of a fuel and oxidizer that is intended for blasting and that is not otherwise classified as an explosive.

A blasting agent consists primarily of inorganic nitrates (ammonium and sodium nitrates) and carbonaceous fuels. The addition of an explosive ingredient, such as TNT, in sufficient quantity, changes the classification of the mixture from a blasting agent to an explosive.

When unconfined, blasting agents cannot be detonated by means of a No. 8 test blasting cap unless an explosive ingredient or sensitizer is added. No. 8 test caps contain the equivalent of two grams of a mixture of 80 percent mercury fulminate and 20 percent potassium chlorate. Nitrocarbonitrate is synonymous with a blasting agent, including ANFO, and is an official classification for interstate transportation. Blasting agents may be classified as (1) dry blasting agents, (2) emulsions, (3) water gel or (4) slurry blasting agents.

Bulk Mixed Compounds: This includes the majority of the ammonium nitrate-fuel oil mixtures and bulk slurries which are often mixed on the job by the supplier in the delivery truck. The detonation velocities range between 9000 and 15,000 feet per second. This product has no water resistance and fair to good fumes, if properly mixed and detonated.

Pre-mixed Nitrocarbonitrates (NCN): Another term for ammonium nitrate mixes. These include products prepared by a commercial manufacturer and purchased by the consumer in the ready-to-use package form. The densities of these products are variable. Velocity ranges from 12,000 to 15,000 feet per second.

Cycling of Ammonium Nitrate: Ammonium nitrate, for its weight, supplies more gas upon detonation than any other explosive. In pure form, ammonium nitrate is almost inert (powerless) and is composed of 60 percent oxygen by weight, 33 percent nitrogen, and seven percent hydrogen.

Two characteristics make this compound both unpredictable and dangerous. Ammonium nitrate is water soluble and if uncoated, can attract water from the atmosphere and slowly dissolve itself. For this reason, most prills have a protective coating of wax or clay which acts as a moisture retardant. The second and most important characteristic is a phenomenon called "cycling." This is the ability of a material to change its crystal form with temperature. Ammonium nitrate will have one of five crystal forms depending on the temperature.

The cycling phenomenon can seriously affect both the storage and performance of any explosive which contains ammonium nitrate. Most dynamites, both regular nitroglycerin or permissibles, contain some percentages of ammonium nitrate, while blasting agents are almost totally comprised of this compound. The cycling effect in dynamite is not due to other ingredients mixed with the ammonium nitrate. For this reason, cycling does not greatly affect dynamite the way it does ANFO. The two temperatures at which cycling will occur under normal conditions are 0 and 90°F. This is to say that products which are stored over the winter, or for a period of time during the summer, most likely will undergo some amount of cycling. During the summer, in poorly ventilated powder magazines, the cycling temperature may be reached daily.

The effect of cycling of ammonium nitrate when isolated from the humidity in the air is that the prills break down into finer and finer particles, or enlarge to the point at which they are virtually inert. When the temperature exceeds 90°F, the prills break down into smaller crystals. This causes the density to increase from 0.8 to 1.2 gm/cc. A density increase will also increase the detonation velocity of the compound. The detonation velocity of ammonium nitrate with a density near 0.8 is around 10,000 feet per second. Ammonium nitrate with a density near 1.2 may have a velocity of 15,000 feet per second.

To further complicate the situation, some blasting agents are not sealed well enough to exclude humidity. After

the ammonium nitrate has undergone one cycle, the waterproof protective coating is broken and the water vapor in the air condenses on the particles. As cycling continues and more water collects, the mass starts to dissolve and upon dissolving, starts to recrystallize into large crystals.

Therefore, it is evident that a volume of ANFO after cycling may have very dense areas and areas of large crystals which are not as dense. The performance of this product may range from that of a very powerful explosive to one that just burns, or one that will not shoot at all.

BLASTING AGENTS

	ANFO 50 LB BAG	ANFO CARTRIDGED	BULK ANFO	ENRICHED ANFO CARTRIDGED	BULK ENRICHED ANFO	SLURRY CARTRIDGED	BULK SLURRY	EMULSION SLURRY CARTRIDGED	BULK EMULSION SLURRY	WATER GEL SLURRY CARTRIDGED	BULK WATER GEL SLURRY
ANGUS	ANFO	ANFO HD	BULK ANFO	COMSOL 160 170 266 300							
APACHE	CARBAMITE P			CARBAMAL 5 10 15		CARBAGEL 5 10 15 100					
ATLAS	PELLITE	PELLITE HD	PELLITE BULK	POWER AN 300 500	POWER AN 300 500			APEX 220 320 240 340 260 360	APEX 1200 1300		
AUSTIN	AUSTINITE 15	AUSTINITE 30	AUSTINITE 15 BULK	AUSTINITE 30 AL	HEF	SLURMITE 205 405 50					
DUPONT								TOVEX E, EA1 EA2 EA3 EA4 E881	TOVEX E, EA1 EA2 EA3 EA4 E881	TOVEX-EXTRA	TOVEX-EXTRA
GULF	NCN 100		NCN 100 BULK	NCN 750						NCN 600 NCN 705 NCN 805 NCN 806	NCN 600 NCN 591 IR SLURRIES
HERCULES	HERCOMIX		BULK ANFO	VIBRONITE S-1 IMPULSOR		HP-348 HP-373 HP-374 HP-380 HP-381 HP-382 GEL-STRIP FLOGEL GELPOWER-D					GEL-FLO
INDEPENDENT	AMMONITE	HI POTENCY 93 AMMONITE WA	BULK ANFO							SURE-X	SURE-X
IRECO	IREMEX 100 106 108 110		IREMEX		IREMEX E 460 560 660		IREGEL 604 SERIES	IREGEL 1105 SERIES	IREGEL 1106 SERIES	IREGEL 305A SERIES	
NITROCHEM	ANDIL FR	ANDIL HD	BULK ANDIL	DELLECK 10	NOVON AN-1	MS-80 SERIES ML 500 ML 700 W SERIES THERMO-PRIMER	MS-80 SERIES				
TROJAN											
GOEX											

(Figure 2-11)

PETN-PETN (pentaerythritoltetranitrate) has a crystal density of 1.76 g/cc and a confined detonation velocity of over 25,000 fps. In various degrees of granulation it is used as a priming composition in detonatators, a base charge in blasting caps, a core load for detonating cord, and in the manufacturer of pentolite. PETN is a secondary explosive and as such is not as sensitive as primary explosives such as lead azide. Cast primers of PETN are also supplied as shaped charges.

RDX - RDX (cyclotrimethylenetrinitramine) is second in strength to nitroglycerin among common explosives substances. When compressed to a density of 1.70, it has a confined detonation velocity of 27,000 fps. RDX is a primary ingredient in composition B. Plasticity and high detonation velocity make it ideal in shaped charges for oil well perforators (jet perforators) and furnace papers jet tappers. RDX is sometimes the base charge for detonators.

Composition B - Composition B is a mixture of RDX and TNT with one to four percent wax added. When cast, it has a density of 1.65 and a detonation velocity of about 25,000 fps. Like pentolite, composition B is used in the cast form as a primer and booster for blasting agents.

Pentolite - Pentolite is a mixture of PETN and TNT. The percentage of PETN can be from 20 percent to 50 percent, with the remainder being TNT. It was originally used for booster charges in military explosives devices and is now used for commercial boosters.

SELECTION OF EXPLOSIVES

There have been many systems developed to rate the strength or power or an explosive. Although these systems work, it is still not clear as to whether or not the information is useful to the field blaster.

There are many reasons for choosing an explosive. These reasons range from the specifications of the product, the price, availability, and reliability. Whatever the reason for selection, the blaster should consider the following properties:

Velocity - If fragmentation is desired, the best results are obtained when the detonation velocity is at or near the sonic velocity of the rock. If mass movement is more important (as in blast casting) or very large fragments are desired (as in riprap production or slabbing), detonation velocity should be notably below the rock's sonic velocity.

Sensitivity - When using charges in small diameter boreholes, the blaster needs sensitive products such as cap sensitive emulsions or water gels. The smaller the hole, the more sensitive the product needs to be. ANFO functions well in large diameter holes (four inches and above), but has trouble sustaining detonation in small holes.

Gas or Pressure Release - This is the amount of gas and pressure released when the explosive or blasting agent detonates. Generally, the more gas release, the more heave or displacement that is possible.

Water Resistance - In conditions where the holes are producing water or ground water is a problem, packaged ANFO, water gels or emulsions function best. There are also plastic borehole liners that can be used for bulk loading operations.

Fume Quality - When working in a poorly ventilated operation such as in a tunnel, mine, or deep trench, select a product with a good (Class I) fume rating. Even when working in the open, allow all evidence of smoke and dust to clear before reentering the blast area, and remember that the toxic gases produced are colorless, odorless, and potentially lethal.

When selecting explosives there are four basic categories:

1. **Dynamites, including Granular Dynamite** (Straight Dynamite, High-Density Extra Dynamite, and Low-Density Extra Dynamite) and **Gelatin Dynamite** (Straight Gelatin Dynamite, Ammonia Gelatin Dynamite, and Semigelatin Dynamite). Use is prohibited by policy unless a case specific waver is obtained from the regional blasting officer.

2. **Water Gels, Emulsions, and Slurries** - Consisting of Cartridges and Bulk products.

3. **Dry Blasting Agents** - Consisting of Poured or Bulk ANFO, Aluminized ANFO, Densified ANFO, and Packaged (waterproof) ANFO.

4. **Binary Explosives** - Consisting of two-component products that are mixed in the field to form an explosive.

GENERAL PROPERTIES
Detonation Velocities (FPS)

Type	Boreholes or Charge Diameter		
	1-1/4"	3"	9"+
Granular Dynamite	7 to 19,000	8 to 19,000	N/A
Gelatin Dynamite	12 to 25,000	13 to 20,000	N/A
Cartridged Water Gel	13 to 22,000	14 to 19,000	N/A
Bulk Water Gel	N/A	14 to 16,000	12 to 19,000
Air-emplaced ANFO	7 to 10,000	12 to 13,000	14 to 15,000
Poured ANFO	6 to 7,000	10 to 11,000	12 to 15,000
Packaged ANFO	N/A	10 to 12,000	14 to 15,000
Cartridged Emulsion	14 to 19,000	14 to 20,000	N/A
Packaged Binary	19 to 20,000	19 to 21,000	N/A

Density (g/cc)

Type	Density
Granular Dynamite	0.8 to 1.4
Gelatin Dynamite	1.0 to 1.7
Cartridged Water Gel	1.1 to 1.3
Bulk Water Gel	1.1 to 1.6
Air-emplaced ANFO	0.8 to 1.0
Poured ANFO	0.8 to 0.9
Packaged ANFO	0.8 to 1.2
Cartridged Emulsion	1.1 to 1.

SENSITIVITY

Type	Hazard Sensitivity	Performance Sensitivity
Granular Dynamite	Moderate to High	Excellent
Gelatin Dynamite	Moderate	Excellent
Cartridged Water Gel	Low	Good to Very Good
Bulk Water Gel	Low	Good to Very Good
Air-emplaced ANFO	Low	Poor to Good
Poured ANFO	Low	Poor to Good
Packaged ANFO	Low	Good to Very Good
Cartridge Emulsion	Low	Good to Very Good
Packaged Binary	Low to Moderate	Very Good

WATER RESISTANCE

Type	Resistance
Granular Dynamite	Poor to Good
Gelatin Dynamite	Good to Excellent
Cartridged Water Gel	Very Good
Bulk Water Gel	Very Good
Air-emplaced ANFO	Poor
Poured ANFO	Poor
Packaged ANFO	Very Good (*if package is not broken or torn*)
Cartridge Emulsion	Very Good
Packaged Binary	Poor to Good

GUIDE FOR EXPLOSIVE SELECTION

	Borehole Diameter		
Type	**2" or less**	**2" to 4"**	**4"+**
Granulate Dynamite	USE	N/A	N/A
Gelatin Dynamite	USE	N/A	N/A
Cartridge Water Gel	USE	USE	N/A
Bulk Water Gel	N/A	USE	N/A
Air-emplaced ANFO	NR	USE	USE
Poured ANFO	NR	USE	USE
Packaged ANFO	N/A	USE	USE
Cartridged Emulsion	USE	USE	N/A
Packaged Binary	USE	USE	N/A

INITIATING DEVICES

Electric Blasting Caps (EBC)

The electric blasting caps are commonly used devices for initiating high explosives. The cap may be inserted directly into the explosive cartridge or used in conjunction with detonating cord. An electric blasting cap consists of two insulated leg wires inserted through insulation into a metal capsule and connected by a thin-filament bridgewire. When enough current is applied to the leg wires, the bridgewire gives off heat energy and ignites a flash charge of heat sensitive explosive, usually lead styphnate. The explosion of the flash charge detonates a primer charge, lead azide, which in turn detonates a base charge of powerful explosive such as PETN or RDX. In some cases, the flash and primer charges are combined. The base charge of the cap detonates with sufficient force to initiate a cap sensitive explosion or detonating cord.

The advantages of electric blasting caps over cap-and-fuse include safety in handling, variety of delay periods, and the ability of the blaster to choose the exact time of detonation. When working in populated areas, noise and resulting public relations problems are reduced by initiating the charge in the borehole with delay caps instead of using trunklines and downlines of detonating cord.

When using electric blasting caps, avoid stray electric currents, such as those caused by power cables lying on the ground, particularly when the ground is wet. Lightning is another source of possible premature detonation. Radio frequency energy is a potential hazard, although the possibility of premature detonation due to this source is remote, except for high-energy, long wavelength transmitters (see IME Publication No. 20).

Consult manufacturer's data for electric current requirements. They vary from brand to brand, so mixing brands in a circuit can cause a misfire and is not recommended. In a delay electric blasting cap, a delay element containing specially blended powders is interposed between the bridgewire and the primer charge. The delay element is accurately calibrated to give a specified time lapse between the application of electric current and the detonation of the base charge.

Two basic series of delay are available: (1) Short or millisecond delays and (2) longer delays, often called slow delays. The millisecond delays have delay increments ranging from 25 to 50 milliseconds; the longer delays, from 0.5 to 1 second. In normal blasting, where maximum fragmentation is desired, millisecond delays produce good breakage and reduce air blast and ground vibration. Slow delays are primarily for underground, quarry, or tunnel work, where they provide enough time for rock movement between delay periods. Longer delays may result in coarser fragmentation than millisecond delays.

Blasting caps are a mass-produced item with extremely tight quality control. The chances of "bad caps" reaching the consumer are only one in several million, and a manufacturing defect will occur in an entire batch (1000 or more) rather than in a single cap. A check of each cap with the galvanometer before loading will identify any "bad cap" before it ends up in the explosive product.

Exploding Bridgewire Detonators (EBW)

The compounds of an exploding bridgewire detonator (EBW) are similar to those in a standard electric blasting cap (EBC), but more stable. The major difference is that EBWs contain no primary explosive. A fine gold bridgewire is in contact with PETN, a secondary explosive, which in turn initiates an RDX base charge.

To function properly, a very large electric current must be delivered to the bridgewire in a very short period of time. This heats the wire through the vaporization phase so rapidly that the wire explodes with enough force to detonate the secondary explosive. If either the amount of current or the rate of application is incorrect, the EBW will not function properly. It may deflagrate, but will not detonate. This means that most sources of extraneous electricity that may detonate an EBC are not hazardous when using an EBC. Static electricity, radio transmissions, automotive batteries or systems, chain saw magnetos, or most generator-type blasting machines

will not detonate an EBW. However, EBWs provide no protection against lightning. A special field-firing set capable of generating a timed 3000 volts is required. A special model suitable for seismic work is also available.

An EBW can be inserted directly into explosives or can be used to initiate detonating cord, similar to an EBC. A maximum of six detonators can be fired simultaneously in series, but because tolerance can vary among EBWs, consult the manufacture before firing more than two in series.

Because an EBW contains only secondary explosives (PETN and RDX), delay detonators are not available. EBWs are recommended for situations where static or other extraneous is a concern, or where fire or impact are factors to be considered, and where unit cost is not extremely important.

Detonating Cord

Detonating cord consists of a core of high explosives, usually PETN, enclosed in a reinforced covering of various combinations of textile, plastic, and waterproofing materials. The different reinforcing covers have different degrees of tensile strength, abrasion resistance, and flexibility. Detonating cord with core loading ranging from 1.4 gr/ft to 400 grains/ft of PETN is available for various uses. Unconfined cords fire at around 21,000 fps. Pure cast RDX has a hydrodynamic velocity of 26,000 and cast PETN is slightly lower.

A PETN core load of 50 gr/ft is used for most applications, and is specifically recommended for down hole use. However, 25 gr/ft detonating cord is recommended for most trunkline applications. Its marked insensitivity to external shock and friction makes detonating cord ideal for use as both a down line and trunkline for primary blasting. The blasting cap need not be connected into the circuit until just before firing, eliminating most hazards of premature detonation. An option is to tape a cap to a 24-inch length of detonating cord. This is called a "pigtail." Just before the blast is ready, the blaster ties this length to the main line. This keeps the sensitive cap out of the circuit until it is needed.

A 25 or 50 gr/ft detonating cord detonates almost any cap sensitive explosives in contact with it, but will not reliably detonate a blasting agent. However, some cap-sensitive emulsions and water gels which are reliably detonated by the point impact of a blasting cap are not reliably detonated by the linear impact of detonating cord. Detaprimes must be used with cord. Always check the manufacturer's recommendations.

Detonating cord has wide application in underground work. In a wet environment, the ends of the detonating cord should be protected from water. PETN will slowly absorb water and become insensitive to initiation. Even when damp, however, detonating cord detonates if initiated on a dry end.

Millisecond delay connectors are available. The connectors are tied between two ends of detonating cord in the trunkline and permit the use of an unlimited number of delay periods. Delay connectors are commonly available in periods of 5, 9, 17, 25, 35, and 45 milliseconds.

Detonating cord with a core load of 1.4 to 5 gr/ft of PETN, known as low energy detonating cord or LEDC has two principal uses. The first is trunkline, where firing with detonating cord is desired, and air blast presents a concern. LEDC produces virtually no air blast. The second use is a down line where center or bottom initiation is desired. Detonating cord with core loads as high as high as 200 gr/ft are laced together to make fireline explosives with combined loading of up to 1400 gr/ft.

AGAIN, There is less risk in handling and loading when using detonating cord than there is when using caps. However, any blasting system is hazardous. Blasting safety depends on the training and experience of the blaster and the blasting crew. Explosive is required to provide adequate initiation for the charge. Primers come in two basic forms: cast (often called high-density or HDP primers) for holes of two-inch diameter or more, and Elastomeric (PETN and latex mixes, such as detaprimes) for holes under two inches in diameter.

Primers are supplied in a variety of sizes and are generally cast PETN, RDX, Pentolite, or Composition B. Provisions are made for initiating the primer with detonating cord (usually a 25 or 50 gr/ft) or a No. 6 or a No. 8 blasting cap.

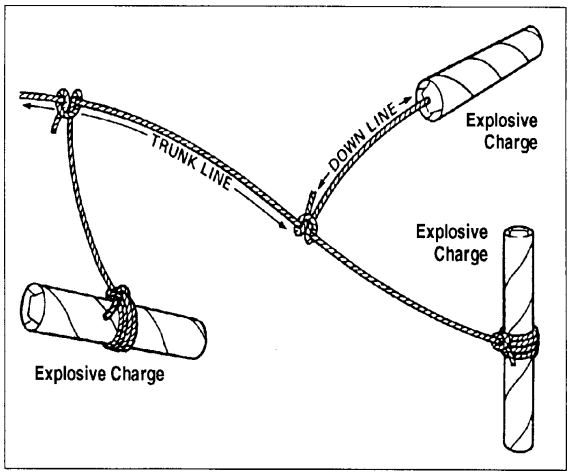

(Figure 2-12) Use of detonating cord for simultaneous nonelectric

NONEL CORDS AND PRIMADET

Nonel is a .12-inch diameter plastic tube with a thin reactive coating on the inside surface. When initiated with an EBW, EBC, or detonator cord, the tube transmits a low energy signal from one point to another by means of a shock wave phenomenon similar to a dust explosion. It will propagate around sharp bends and through kinks. Because such a small amount of reactive material is used, the reaction will not initiate the explosives and the tube remains intact during and after functioning. Noise levels are extremely low.

Nonel is not initiated by stray currents, fire, or most light impact, shock and friction hazards encountered in normal blasting work. However shock initiators using 12 gauge shot shell primers are used to initiate Nonel.

Nonel is available in several factory-assembled lengths with nonelectric delay detonators crimped on end, called Primadets, that will detonate cap sensitive cartridge explosives.

PRIMERS

With non-cap-sensitive blasting agents, the initiation sensitivity is so low that a primer (any cap sensitive explosive) is required to provide adequate initiation for the charge. Primers come in two basic form: cast (often called high-density or HDP primers) for holes of two-inch diameter or more, and Elastomeric (PETN and latex mixes, such as detaprimes) for holes under two inches in diameter.

Primers are supplied in a variety of sizes and are generally cast PETN, RDX, Pentolite or Composition B. Provisions are made for initiating the primer with detonation cord (Usually a 25 or 50 gr/ft) or a No 6 or No 8 blasting cap.

Chapter 3

STORAGE

GENERAL STORAGE INFORMATION

Storage shall conform to part 55, Subpart K of Title 27 CFR (BATF). Exceptions to Title 27 CFR, other than more stringent regulations of local, state, or federal agencies, shall be approved by the Director of BATF (see ATF P 5400.9) dated 6/90.

PERMANENT MAGAZINES

Post magazines with signs reading "EXPLOSIVES-KEEP OFF." Locate signs to minimize the possibility of a bullet traveling in the direction of the magazine if anyone shoots at the sign.

Day boxes shall not be used for permanent storage.

27 CFR, SUBPART K - STORAGE

55.201 GENERAL

(a) Section 842(j) of the Act and 55.29 of this part requires that the storage of explosive materials must be in accordance with regulations in this part. Further, section 846 of this Act authorizes regulations to prevent the recurrence of accidental explosions in which explosive materials were involved. The storage standards prescribed by this subpart confer no right or privileges to store explosive materials in a manner contrary to state or local law.

(b) The director may authorize alternate construction for explosives storage magazine construction that is substantially equivalent to the standards of safety and security contained in this subpart. Any alternate explosive magazine construction approved by the director prior to August 9, l982, will continue as approved unless notified in writing by the director. Any person intending to use alternate magazine construction shall submit a letter of application to the regional director (compliance) for transmittal to the director, specifically describing the proposed magazine. Explosive materials may not be stored in alternate magazines before the applicant has been notified that the application has been approved.

(c) A licensee or permittee who intends to make changes in his magazines, or who intends to construct or acquire additional magazines, shall comply with 55.63.

(d) The regulations set forth in 55.221 through 55.224 pertain to the storage of special fireworks, pyrotechnic compositions, and explosive materials used in assembling fireworks.

(e) The provisions of 55.202(a) classifying flash powder and bulk solutes as high explosives are mandatory after March 7, l990: Provided, that those persons who hold licenses or permits under this part on that date shall, with respect to the premises covered by such licenses or permits, comply with the high explosives storage requirements for flash powder and bulk solutes by March 7, l991 (Amended by TD. ATF-293, 55 FR 3722, Feb. 5, l990).

Classes of Explosive Materials

For purposes of this part, there are three classes of explosive materials. These classes, together with the description of explosive materials comprising each class, are as follows:

High Explosives - Explosive materials which can be caused to detonate by means of a blasting cap when unconfined, (for example, dynamite, emulsions, water gels, flash powders, and bulk solutes). See also 55.201.

Low Explosives - Explosive materials which can be caused to deflagrate when confined, (for example, black powder, safety fuses, ignitor cords, fuse lighters, and "special fireworks" defined as Class B explosives by U.S. Department of Transportation regulations in 49 CFR Part 173, except for bulk solutes.)

Blasting Agents - (For example, ammonium nitrate-fuel oil and certain water gels (see also 55.ll). (Amended by TD.ATF-293, 55 FR 3722, Feb. 5, l990).

Types of Magazines

For purposes of this part, there are five types of magazines. These types, together with the classes of explosive materials, as defined in 55.202, which will be stored in them, are as follows:

Type 1 Magazines - Permanent magazines for the storage of high explosives, subject to the limitations prescribed by 55.206 and 55.213. Other classes of explosive materials may also be stored in type l magazines.

Type 2 Magazines - Mobile and portable indoor and outdoor magazines for the storage of high explosives, subject to the limitations prescribed by 55.206, 55.208(b), and 55.213. Other classes of explosive materials may also be stored in type 2 magazines.

Type 3 Magazines - Portable outdoor magazines for the temporary storage of high explosives while attended (for example, a "day-box"), subject to the limitations prescribed by 55.206 and 55.213. Other classes of explosive materials may also be stored in type 3 magazines.

Type 4 Magazines - Magazines for the storage of low explosives, subject to the limitations prescribed by 55.206(b), 55.210(b), and 55.213. Blasting agents may be stored in type 4 magazines, subject to the limitations prescribed by 55.206(a), 55.210(b), and 55.213.

Type 5 Magazines - Magazines for the storage of blasting agents, subject to the limitations prescribed by 55.206(c), 55.211(b), and 55.213.

INSPECTION

Inspection of Magazines

Any person storing explosive materials shall inspect their magazines at least every seven days. This inspection need not be an inventory, but must be sufficient to determine whether there has been unauthorized entry or attempted entry into the magazine, or unauthorized removal of the contents of the magazines.

Explosive Materials in Storage

Any person storing explosive materials shall inspect the magazine at least every seven days. This inspection need not be an inventory, but must be sufficient to determine whether there has been unauthorized entry or attempted entry into the magazine. Notify the nearest regional office of the Bureau of Alcohol, Tobacco and Firearms (BATF), and appropriate state offices within 24 hours of any loss, theft, or unauthorized entry into a magazine.

Movement of Explosive Materials

All explosive materials must be kept in locked magazines meeting the standards in this subpart unless they are:

(a) In the process of manufacture;

(b) Being physically handled in the operating process of a licensee or user;

(c) Being used; or

(d) Being transported to a place of storage or use by a licensee or permittee or by a person who has lawfully acquired explosive materials under 55.106.

Location of Magazines

(a) Outdoor magazines in which high explosives are stored must be located no closer to inhabited buildings, passenger railways, public highways, or other magazines in which high explosives are stored, than the minimum distances specified in the table of distances for storage of explosive materials in 55.218.

(b) Outdoor magazines in which low explosives are stored must be located no closer to inhabited buildings, passenger railways, public highways, or other magazines in which explosive materials are stored, than the minimum distances specified in the table of distances for storage of low explosives in 55.219, except that the table of distances in 55.224 shall apply to the storage of special fireworks. The distances shown in 55.219 may not be reduced by the presence of barricades.

(c) (1) Outdoor magazines in which blasting agents in quantities of more than 50 pounds are stored must be located no closer to inhabited buildings, passenger railways, or public highways than the minimum distances

specified in the table of distances for storage of explosive materials in 55.218.

(c) (2) Ammonium nitrate and magazines in which blasting agents are stored must be located no closer to magazines in which high explosives or other blasting agents are stored than the minimum distances specified in the table of distances for the separation of ammonium nitrate and blasting agents in 55.220. However, the minimum distances for magazines in which explosives and blasting agents are stored from inhabited buildings, etc., may not be less than the distances specified in the table of distances for storage of explosives materials in 55.218 (Amended by T.D. ATF- 293, 55 FR 3722, Feb. 5, l990).

CONSTRUCTION FOR TYPE 1 MAGAZINES

A type 1 magazine is a permanent structure: a building, an igloo or "army-type structure," a tunnel, or a dugout. It is to be bullet-resistant, fire-resistant, weather-resistant, theft-resistant, and ventilated. Refer to I.M.E. *Publication No. 1*.

CONSTRUCTION OF TYPE 2 MAGAZINES

A type 2 magazine is a box, trailer, semitrailer, or other mobile facility. Refer to I.M.E. *Publication No. 1*.

Outdoor Magazines - Outdoor magazines are to be bullet-resistant, fire-resistant, weather-resistant, theft-resistant, and ventilated. They are to be supported to prevent direct contact with the ground and, if less than one cubic yard in size, must be securely fastened to a fixed object. The ground around outdoor magazines must slope away for drainage or other adequate drainage provided. When unattended, vehicular magazines must have wheels removed or otherwise effectively immobilized by kingpin locking devices or other methods approved by the director.

Indoor magazines - Indoor magazines are to be fire-resistant and theft-resistant. They need not be bullet-resistant and weather-resistant if the buildings in which they are stored provide protection from the weather and from bullet penetration. No indoor magazine is to be located in a residence or dwelling. The indoor storage of high explosives must not exceed a quantity of 50 pounds. More than one indoor magazine may be located in the same building if the total quantity of explosive materials stored does not exceed 50 pounds. Detonators must be stored in a separate magazine (except as provided in 55.213) and the total quantity of detonators must not exceed 5000.

CONSTRUCTION OF TYPE 3 MAGAZINES

A type 3 magazine is a "day box" or other portable magazine. It must be fire-resistant, weather-

resistant, and theft-resistant. A type 3 magazine is to be constructed of not less than number 12-gauge (.1046) steel, lined with at east either 1/2-inch plywood or 1/2-inch Masonite-type hardboard.

CONSTRUCTION OF TYPE 4 MAGAZINES

A type 4 magazine is a building, igloo, or "army-type structure," tunnel, dugout, box, trailer, or a semi-trailer or other mobile magazine.

CONSTRUCTION OF TYPE 5 MAGAZINES

A type 5 magazine is a building, igloo, or "army-type structure," tunnel, dugout, box, trailer, or a semi-trailer or other mobile facility.

Smoking and Open Flames

Smoking, matches, open flames and spark producing devices are not permitted:

(a) In any magazine;

(b) Within 50 feet of any outdoor magazine; or

(c) Within any room containing an indoor magazine.

Quantity and Storage Restrictions

(a) Detonators are not to be stored in the same magazine with other explosive materials, except under the following circumstances:
   (1) In a type 4 magazine, detonators that will not mass detonate may be stored with electric squibs, safety fuse, igniters, and igniter cord.
   (2) In a type 1 or type 2 magazine, detonators may be stored with delay devices and any of the items listed in item one of this section.

STORAGE WITHIN TYPES 1, 2, 3, AND 4 MAGAZINES

(a) Explosive materials within a magazine are not to be placed directly against interior walls and must be stored so as not to interfere with ventilation. To prevent contact of stored explosive materials with walls, a non-sparking lattice work or other non-sparking material may be used.

(b) Containers of explosive materials are to be stored so that marks are visible. Stocks of explosive materials are to be stored so they can be easily counted and checked upon inspection.

(c) Except with respect to fiberboard or other nonmetal containers, containers of explosive materials are not to be unpacked or repacked inside a magazine or within 50 feet of a magazine, and must not be unpacked or repacked close to other explosive materials.

(d) Tools used for opening or closing containers of explosive materials are to be of non-sparking materials, except that metal slitters may be used for opening fiberboard containers. A wood wedge and a fiber, rubber, or wooden mallet are to be used for opening or closing wood containers of explosive materials. Metal tools other than non-sparking transfer conveyors are not to be stored in any magazine containing

high explosives.

Lighting

(a) Battery-activated safety lights or battery-activated safety lanterns may be used in explosive storage magazines.

(b) Electric lighting used in any explosives storage magazine must meet the standards prescribed by the "National Electrical Code," (National Fire Protection Association, NFPA 70-81), for the conditions present in the magazine at any time. All electrical switches are to be located outside of the magazine and also meet the standards prescribed by the National Electrical Code.

Form Approved: OMB No. 1512-0185 (7/31/84)

DEPARTMENT OF THE TREASURY — BUREAU OF ALCOHOL, TOBACCO AND FIREARMS

REPORT OF THEFT OR LOSS — EXPLOSIVE MATERIALS

DATE

Note: Section 842(k), 18 U.S.C. Chapter 40 provides that "It shall be unlawful for any person who has knowledge of the theft or loss of any explosive materials from his stock to fail to report such theft or loss within twenty-four hours of discovery thereof to the Secretary and to appropriate local authorities." Theft or loss must be reported immediately by telephone to the nearest ATF office, listed on reverse, and a report must be made on this form within 24 hours to the same office (27 CFR 181.30). It is suggested that a copy of this report be retained by the person making the report. Attach additional sheets or invoices, if necessary, to provide the required information. Each item should be completed as applicable to the best of your ability.

1. NAME, ADDRESS AND TELEPHONE NUMBER OF PERSON MAKING REPORT *(Include corporate or business name, if applicable)*

2. LOCATION OF THEFT OR LOSS *(If different from Item 1)*

3. THEFT OR LOSS	DATE	TIME
a. DISCOVERED		
b. OCCURRED *(Show approximate if exact not known)*		
c. REPORTED TO ATF BY TELEPHONE		
d. REPORTED TO LOCAL AUTHORITIES		

4. ATF OFFICE TO WHICH REPORTED BY TELEPHONE

5. NAME AND ADDRESS OF LOCAL AUTHORITY TO WHOM REPORTED

6. EXPLOSIVE MATERIALS LOST OR STOLEN *(Attach invoices or additional sheets, if necessary)*

a. MANUFACTURER OR BRAND NAME *(Include date and shift code)*	b. QUANTITY *(Pounds of Explosives, Number of Caps)*	c. TYPE AND DESCRIPTION *(Dynamite, Blasting Agents, Detonators, etc. Include for each type, size, MS delay or length of legwire, as applicable)*

7. THEFT OR LOSS OCCURRED FROM *(Check applicable box)*

☐ PERMANENT MAGAZINE ☐ PORTABLE MAGAZINE ☐ TRUCK ☐ WORK SITE ☐ OTHER *(Explain)*

8. ENTRY TO MAGAZINE MADE THROUGH *(Complete if applicable)*

☐ DOOR ☐ ROOF ☐ FLOOR ☐ FOUNDATION

☐ WALL ☐ CEILING ☐ VENTS ☐ OTHER *(Explain)*

9. NUMBER AND TYPE OF LOCKS FORCED *(Complete if applicable)*

10. OTHER INFORMATION PERTINENT TO THE THEFT OR LOSS

11. SIGNATURE AND TITLE OF PERSON MAKING REPORT

12. FEDERAL EXPLOSIVES LICENSE OR PERMIT, IF ANY

FOR ATF USE ONLY

DATE RECEIVED	TIME RECEIVED	UNIQUE IDENTIFIER

ATF F 4712 (5400.5) (11-81) PREVIOUS EDITIONS ARE OBSOLETE

(Figure 3-1) Report of theft or loss of explosives material form OMB-1512-0185.

(c) Copies of invoices, work orders or similar documents which indicate the lighting complies with the National Electrical Code must be available for inspection by ATF officers.

NOTES TO THE TABLE OF DISTANCES FOR STORAGE OF EXPLOSIVES (next page)

(1) When two or more storage magazines are located on the same property, each magazine must comply with the minimum distances specified from inhabited buildings, railways, and highways, and, in addition, they should be separated from each other by not less than the distances shown for "Separation of Magazines," except that the quantity of explosives contained in cap magazines shall govern in regard

ADDRESS AND TELEPHONE LISTING OF ATF OFFICES

Forward completed ATF Form 4712 to the nearest ATF Office listed below *(alphabetically by State, Guam, Puerto Rico)*:

Special Agent in Charge (ATF)
2121 8th Avenue, North
Birmingham, Alabama 35203
Phone: 205-254-1205

Resident Agent in Charge (ATF)
New Federal Office Bldg.
U.S. Courthouse, 701 C Street
Anchorage, Alaska 99513
Phone: 907-271-5701

Resident Agent in Charge (ATF)
2721 N. Central Ave.
Phoenix, Arizona 85004
Phone: 602-261-2025

Special Agent in Charge (ATF)
300 N. Los Angeles Street
(Mailing Address: P.O. Box 1991)
Los Angeles, California 90053
Phone: 213-688-4812

Special Agent in Charge (ATF)
525 Market Street - Room 2540
San Francisco, California 94105
Phone: 415-556-6799

Resident Agent in Charge (ATF)
Room 603
Federal Bldg.
Hartford, Connecticut 06103
Phone: 203-244-2770

Special Agent in Charge (ATF)
5205 N.W. 84th Ave.
Miami, Florida 33166
Phone: 305-350-4368

Special Agent in Charge (ATF)
C&S Bank Building - Suite 265
1 West Court Square
Decatur, Georgia 30030
Phone: 404-221-6526/27

Resident Agent in Charge (ATF)
300 Ala Moana Blvd.
(Mailing Address: P.O. Box 50103)
Honolulu, Hawaii 96801
Phone: 808-546-3196

Special Agent in Charge (ATF)
Suite 300
2115 Butterfield Road
Oak Brook, Illinois 60521
Phone: 313-353-8474

Special Agent in Charge (ATF)
600 Federal Place
Louisville, Kentucky 40202
Phone: 502-582-5211

Special Agent in Charge (ATF)
Hale Boggs Federal Office Bldg.
500 Camp Street
New Orleans, Louisiana 70130
Phone: 504-682-2350

Special Agent in Charge (ATF)
John F. Kennedy Bldg.
(Mailing Address: P.O. Box 9115)
Boston, Massachusetts 02114
Phone: 617-223-3818

Special Agent in Charge (ATF)
Federal Building
(Mailing Address: P.O. Box 1897)
Detroit, Michigan 48226
Phone: 313-226-7300

Special Agent in Charge (ATF)
U.S. Court House & Fed. Bldg.
316 North Robert Street
St. Paul, Minnesota 55101
Phone: 612-725-7093

Special Agent in Charge (ATF)
100 West Capital Street
Jackson, Mississippi 39201
Phone: 601-490-4206

Special Agent in Charge (ATF)
1150 Grand Avenue
Kansas City, Missouri 64106
Phone: 816-758-7188

Special Agent in Charge (ATF)
1114 Market Street
St. Louis, Missouri 63101
Phone: 314-279-5559

Resident Agent in Charge (ATF)
2401 Morris Avenue
(Mailing Address: P.O. Box 327)
Union, New Jersey 07083
Phone: 201-341-3184

Special Agent in Charge (ATF)
90 Church Street
(Mailing Address: P.O. Box 3842)
Church Street Station)
New York, New York 10007
Phone: 212-264-4658

Special Agent in Charge (ATF)
222 S. Church Street - Suite 404
Charlotte, North Carolina 28202
Phone: 704-371-6125

Resident Agent in Charge (ATF)
U.S. Post Office Building
Room 315
Cincinnati, Ohio 4520
Phone: 513-684-3354

Special Agent in Charge (ATF)
55 Erie View Plaza - Suite 500
Cleveland, Ohio 44114
Phone: 216-522-3374

Resident Agent in Charge (ATF)
200 N.W. Fifth Street
Oklahoma City, Oklahoma 73102
Phone: 405-231-4877

Special Agent in Charge (ATF)
U.S. Custom House
2nd and Chestnut Streets
Philadelphia, Pennsylvania 19106
Phone: 215-597-7266

Resident Agent in Charge (ATF)
Federal Building
1835 Assembly Street
Columbia, South Carolina 29201
Phone: 803-677-5723

Special Agent in Charge (ATF)
4004 Hillsboro Road
Nashville, Tennessee 37215
Phone: 615-

Special Agent in Charge (ATF)
1114 Commerce Street
Dallas, Texas 75242
Phone: 214-767-2750

Special Agent in Charge (ATF)
16630 Imperial Valley Dr.
(Mailing Address: P.O. Box 60927)
Houston, Texas 77060
Phone: 713-226-5405

Special Agent in Charge (ATF)
701 West Broad Street
Falls Church, Virginia 22046
Phone: 703-285-2543

Resident Agent in Charge (ATF)
400 North 8th Street
(Mailing Address: P.O. Box 10068)
Richmond, Virginia 23240
Phone: 804-925-2668

Special Agent in Charge (ATF)
806 Federal Bldg.
915 2nd Ave.
Seattle, Washington 98174
Phone: 206-442-4485

Special Agent (ATF)
U.S. Courthouse Federal Bldg.
Avienda Carlos Chardon
Hato Rey, Puerto Rico 00919
Phone: 809-753-4084

PRIVACY ACT INFORMATION

The following information is provided pursuant to section 3 of the Privacy Act of 1974 (5 U.S.C. § 552a(e)(3).

1. **Authority.** Solicitation of this information is made pursuant to Title XI of the Organized Crime Control Act of 1970 (18 U.S.C. Chapter 40). Disclosure of a theft or loss of explosive materials is mandatory pursuant to 18 U.S.C. § 842(k) for [illegible] person who has knowledge of such theft or loss from his stock

2. **Purpose.** The purpose for the collection of this information is to give ATF notice of the theft or loss of explosive materials, and to furnish ATF with the pertinent facts surrounding such theft or loss. In addition, the information is used to confirm and verify any prior telephonic or other informal notification of a theft or loss of explosive materials.

3. **Routine Uses.** The information will be used by ATF to aid in the administration of laws within its jurisdiction concerning the regulation of explosive materials and other related areas. In addition, the information may be disclosed to other Federal, State, foreign, and local law enforcement and regulatory agencies to aid in the enforcement of laws within their jurisdiction.

4. **Effects of not supplying information requested.** 18 U.S.C. § 842(k) makes it unlawful for any person, who has knowledge of the theft or loss of explosive materials from his stock, to fail to report such theft or loss within twenty-four hours of discovery thereof, to the Secretary and to appropriate local authorities. The penalty for violation of this section is a fine of not more than $1,000 or imprisonment for not more than one year, or both. 18 U.S.C. § 844(b).

PAPERWORK REDUCTION ACT NOTICE

This request is in accordance with Section 3507, Public Law 96-511, December 11, 1980. The purpose of this information collection is to determine whether the person receiving explosives is eligible to do so under federal law. The information is subject to inspection by ATF officials. This information is mandatory by statute. (18 U.S.C. 842)

ATF F 4712 (5400.5) (11-81)

(Figure 3-2) List of addresses and telephone numbers of BATF Offices.

Explosives Storage Magazine Condition Report

Inspector:

Magazine location: *Section* *Range* *Township* *County*

National Forest:

Magazine name or number:

Date:

Designated individual responsible for magazine: *Name* *Title*

Other personnel, if any, designated secondary responsibility:

Do these personnel hold current Blaster's Certificate authorizing handling, transportation, and storage? ☐ *Yes* ☐ *No*

Is this a Forest Service magazine? ☐ *Yes* ☐ *No*

I. Magazine Site:

A. Conformance with American Table of Distances:

Is maximum storage stenciled or painted on inside wall of magazine? ☐ Yes ☐ No

Maximum quantity of explosives authorized for storage in magazine _____lbs.

Quantity stored _____lbs.

Barricaded? ☐ Yes ☐ No

Distance to nearest inhabited building, dwelling _____feet

Distance to nearest public road _____feet

Distance to nearest ski lift, downhill ski run, or other public facility _____feet

Site *does* ☐ *does not* ☐ conform to standards

B. Is there utilization of natural barriers? Describe:

_____

C. Drainage of terrain near magazine, (slope, direction of flow, soil, etc.). Describe:

_____

D. Exposure to Sun (south slope, north slope, shaded by trees, covered by snowbank, etc.). Describe:

_____

E. Accessibility to other than authorized personnel, i.e. exposed to careless discharge of firearms, vandalisms, etc. Describe:

_____

(Figure 3-3) Explosives Storage Magazine Condition Report.

Explosives Storage Magazine Condition Report continued. . .

II. Construction of Magazine:

A. Type Structure (check one):

☐ Reinforced concrete ☐ Brick or masonary
☐ Frame ☐ Exposed wood
☐ Metal-sheathed outside ☐ Other(Describe): _____

Is structure bullet proof? ☐ Yes ☐ No
Rodent proof? ☐ Yes ☐ No

B. Flooring (check one):

☐ Wood – Are nails exposed? ☐ Yes ☐ No
☐ Earth
☐ Concrete – Are duckboards, pallets, or rubber mats over concrete? ☐ Yes ☐ No
Are there any spark producing hazards on floor? ☐ Yes ☐ No
If yes, describe: _____

C. Ventilation

Is flooring set back 5 inches from wall? ☐ Yes ☐ No

If concrete floor, are duckboards or pallets provided? ☐ Yes ☐ No

If yes, how are the vents screened? _____

What is the condition of screening?_____

What type of roof vent is provided? Describe: _____

Are vents installed with an indirect flow of air? ☐ Yes ☐ No

Is the air venting adequate for this magazine? ☐ Yes ☐ No

D. Lightning and Static Protection

Is there a lightning rod system? ☐ Yes ☐ No

If yes, describe: rod, cables, ground, and condition (corroded? broken?). _____

III. Method of Storage and Condition of Explosives in Magazine

A. Storage

Are explosives at least 5 inches from walls? ☐ Yes ☐ No

Are explosives cases stacked top side up? ☐ Yes ☐ No

Is there sufficient room between stacks to permit circulation of air? ☐ Yes ☐ No

Are caps or made up primers stored in explosives magazine? ☐ Yes ☐ No

Are explosives stacked so oldest stock may be used first? ☐ Yes ☐ No

Are open or partially used cases, stacked separately from full ones? ☐ Yes ☐ No

Are stacks separated according to type and grade? ☐ Yes ☐ No

B. Condition of Explosives

Are cases damp? ☐ Yes ☐ No

Are explosives damp inside cases? ☐ Yes ☐ No

Are any cases broken, rodent gnawed, or in any way damaged? ☐ Yes ☐ No

If explosives show signs of deterioration, check appropriate box below:

Are explosives becoming dark in color? ☐ Yes ☐ No

Are explosives soft and mushy in texture? ☐ Yes ☐ No

Are there fumes in magazine? ☐ Yes ☐ No

Is there any indication of leakage in explosives? ☐ Yes ☐ No

Are cases stained? ☐ Yes ☐ No

If the answer to any of the above is Yes, Describe:

_____

(Figure 3-4) Explosives Storage Magazine Condition Report, continued.

Explosives Storage Magazine Condition Report continued. . .

Does any explosive in magazine appear to be deteriorated to the point where it is dangerous to handle and would require disposal by military EOD. teams?
☐ Yes ☐ No If yes, describe in full: _____

Special Note:
If the above described condition exists, close magazine and immediately notify District Ranger, Forest Engineer, Regional Forester, and Regional Blaster Examiner.

C. Detonating Cord

If detonating cord is stored in magazine, is it in moisture and rodent-proof container? ☐ Yes ☐ No

Is it damp, rodent gnawed, or is the protective covering damaged in any way? ☐ Yes ☐ No
If yes, describe: _____

D. Detonator (Cap) Magazine

How far is cap magazine from explosives magazine?
_____feet

Are caps in rodent proof containers if necessary?
☐ Yes ☐ No

Is magazine rodent proof? ☐ Yes ☐ No

Are caps damp? ☐ Yes ☐ No

Are caps stored in such a manner as to be exposed to any hazard from friction, static, or falling objects?
☐ Yes ☐ No If yes, describe: _____

Do caps show corrosion, cracking of insulation on leg wires, or other signs of deterioration? ☐ Yes ☐ No
If yes, describe: _____

Are any other blasting materials other than caps and fuses stored in cap magazine? ☐ Yes ☐ No
If yes, describe: _____

IV Cleanliness of Magazine

Is floor of magazine swept clean? ☐ Yes ☐ No
If no, describe: _____

Is floor of magazine stained from leaky explosives?
☐ Yes ☐ No
If yes, describe: _____

Are there any empty explosives containers in magazine?
☐ Yes ☐ No
If yes, describe: _____

Is general appearance of magazine clean, neat, and orderly?
☐ Yes ☐ No Remarks: _____

V. Fire Prevention

Is brush cleared around outside of magazine for at least 50 feet? ☐ Yes ☐ No

How far around magazine is ground cleared to mineral soil?
_____feet

Are there any serious fire hazards in the immediate vicinity of the magazine? ☐ Yes ☐ No

VI. Signing and Marking of Magazine

Does magazine marking conform to Forest Service safety code? ☐ Yes ☐ No If no, describe: _____

(Figure 3-5) Explosives Storage Magazine Condition Report, continued.

Explosives Storage Magazine Condition Report continued. . .

VII. Inventory Records

Is an explosives inventory record kept in magazine?
☐ Yes ☐ No

If yes, describe form, or submit copy with inspection report.
_____

Where is second copy kept? _____

Are inventory records *(refer to III D)* neat, clean, legible, and kept up to date? ☐ Yes ☐ No

Is any provision made to date mark cases on arrival at magazine so oldest stock may be identified?
☐ Yes ☐ No If yes, describe: _____

VIII. Miscellaneous

Is magazine securely locked with at least two high security locks? ☐ Yes ☐ No

With special lock meeting BATF regulations?
☐ Yes ☐ No

Are keys strictly controlled? ☐ Yes ☐ No

Is any explosive material not belonging to Forest Service stored in magazine? ☐ Yes ☐ No If yes, describe:
_____

Is anything, particularly iron or spark producing items, other than explosives or caps stored in either explosives or cap magazines? ☐ Yes ☐ No If yes, describe:
_____

Inspection Rating

☐ Satisfactory

☐ Needs corrections

Inspector's remarks and recommendations: (If more room is needed, use additional sheet of paper.

(Figure 3-6) Explosives Storage Magazine Condition Report, continued.

Inspection and Inventory Record

(Check Type)
☐ Explosives Magazine ☐ Detonator Magazine

Region	Forest & District	Magazine

Inspection

If stock added or removed, update Inventory section.

Date	Signature	(Check Action) Inspected	Added Stock	Removed Stock

Inventory

Explosives (type)	Mfg	Date	Initial	Added or Removed	Running Inventory	Date Code

Explosives (type)	Mfg	Date	Initial	Added or Removed	Running Inventory	Date Code

Explosives (type)	Mfg	Date	Initial	Added or Removed	Running Inventory	Date Code

Explosives (type)	Mfg	Date	Initial	Added or Removed	Running Inventory	Date Code

Explosives (type)	Mfg	Date	Initial	Added or Removed	Running Inventory	Date Code

Explosives (type)	Mfg	Date	Initial	Added or Removed	Running Inventory	Date Code

(Figure 3-7) Blank Inspection and Inventory Record form.

INSPECTION AND INVENTORY RECORD

(Check Type) ☑ Explosives Magazine ☐ Detonator Magazine

Region	Forest & District	Magazine
7	Mescalero Bentwood	Bentwood

inspection

DATE	SIGNATURE	(check action) Inspected	Added Stock	Removed Stock
7/2	B. C. Jason	✓		
7/6	B. C. Jason	✓		
7/9	B. C. Jason		✓	
7/13	B. C. Jason	✓		
7/16	B. C. Jason	✓		✓
7/17	B. C. Jason			✓
7/20	B. C. Jason	✓		
7/23	B. C. Jason	✓		
7/27	B. C. Jason	✓		
7/30	B. C. Jason	✓		
8/3	J. J. Jones	✓		

inventory

Explosives (type): Water Gel T500 DuPont — Mfg:

date	initial	added or removed	running inventory	date code
7/4	BCJ	100#	1000#	7/4/79
7/16	BCJ	30#	970#	
7/17	BCJ	130	840#	

Explosive (type): HDP27 Primers DuPont — Mfg:

date	initial	added or removed	running inventory	date code
7/4	BCJ	120#	120#	7/2/79
7/16	BCJ	4#	116#	
7/17	BCJ	23#	93#	

Explosive (type): Detonating Cord — Mfg: EB

date	initial	added or removed	running inventory	date code
7/4	BCJ	1000'	1000'	7/4/79
7/16	BCJ	100'	900'	
7/17	BCJ	120'	730'	

Explosive (type) — Mfg:

date	initial	added or removed	running inventory	date code

Explosive (type) — Mfg:

date	initial	added or removed	running inventory	date code

Explosive (type) — Mfg:

date	initial	added or removed	running inventory	date code

(Figure 3-8) Example of a properly filled out Inspection and Inventory Record form.

to the spacing of said cap magazines from magazines containing other explosives. If any two or more magazines are separated from each other by less than the specified "Separation of Magazines" distances, then such two or more magazines, as a group must be considered as one magazine and the total quantity of explosives stored in such group must be treated as if stored in a single magazine located on the site of any magazine of the group and must comply with the minimum of distances specified from other magazines, inhabited buildings, railways, and highways.

(2) All types of blasting caps in strengths through No. 8 cap should be rated at 1 to 2 lbs. of explosives per 1000 caps. For strengths higher than No. 8 cap, consult the manufacturer.

(3) For quantity and distance purposes, detonating cord of 50 or 60 grains per foot should be calculated as equivalent to 9 lbs. of high explosives per 1000 feet. Heavier or lighter core loads should be rated proportionately.

Notes to the Table of Separation Distances of Ammonium Nitrate and Blasting Agents from Explosives or Blasting Agents (next page)

(1) This table specifies separation distances to prevent explosion of ammonium nitrate and ammonium nitrate based blasting agents by propagation from nearby stores of high explosives or blasting agents referred to in the tables the "donor." Ammonium nitrate, by itself, is not considered to be a donor when applying this table.

Ammonium nitrate, ammonium nitrate-fuel oil or combinations thereof are acceptors. If stores of ammonium nitrate are located within the sympathetic detonation distance of explosives or blasting agents, one-half the mass of the ammonium nitrate is to be included in the mass of the donor.

(2) When the ammonium nitrate and/or blasting agent is not barricaded, the distances shown in the table must be multiplied by six. These distances allow for the possibility of high-velocity metal fragments from mixers, hoppers, truck bodies, sheet metal structures, metal containers, and the like which may enclose the "donor." Where explosives storage is in bullet resistant magazines or where the storage is protected by a bullet-resistant wall, distances and barricade thicknesses in excess of those prescribed are not required.

(3) These distances apply to ammonium nitrate that passes the insensitivity test prescribed in the definition of ammonium nitrate fertilizer issued by the Fertilizer Institute. Ammonium nitrate failing to pass the test must be stored at proper separation distances.

(4) These distances apply to blasting agents which pass the insensitivity test prescribed in regulations of the U.S. Department of Transportation (49CFR Part 173).

(5) Earth or sand dikes, or enclosures filled with the prescribed minimum thickness of earth or sand are acceptable artificial barricades. Natural barricades, such as hills or timber of sufficient density that the surrounding exposures which require protection cannot be seen from the "donor" when the trees are bare of leaves, are also acceptable.

(6) For determining distances to be maintained from inhabited buildings, passenger railways, and public highways, use the table in 55.218.

Repair of Magazines

Before repairing the interior of magazines, all explosive materials are to be removed and the interior cleaned. Before repairing the exterior of magazines, all explosive materials must be removed if there exists any possibility that repairs may produce sparks or flame. Explosive materials removed from magazines under repair must be:

(a) Placed in other magazines appropriate for the storage of those explosive materials under this subpart; or

(b) Placed a safe distance from the magazines under repair where they are to be properly guarded and protected until the repairs have been completed.

QUANTITY OF EXPLOSIVES (IN POUNDS)		DISTANCES (IN FEET)							
		INHABITED BUILDINGS		PUBLIC HIGHWAYS, CLASS A to D**		PASSENGER RAILWAYS & PUBLIC HIGHWAYS: With traffic volume of more than 3,000 vehicles per day		SEPARATION OF MAGAZINES	
OVER	NOT OVER	BARRI-CADED	UNBARRI-CADED	BARRI-CADED	UNBARRI-CADED	BARRI-CADED	UNBARRI-CADED	BARRI-CADED	UNBARRI-CADED
2	5	70	140	30	60	51	102	6	12
5	10	90	180	35	70	64	128	8	16
10	20	110	220	45	90	81	162	10	20
20	30	125	250	50	100	93	186	11	22
30	40	140	280	55	110	103	206	12	24
40	50	150	300	60	120	110	220	14	28
50	75	170	340	70	140	127	254	15	30
75	100	190	380	75	150	139	278	16	32
100	125	200	400	80	160	150	300	18	36
125	150	215	430	85	170	159	318	19	38
150	200	235	470	95	190	175	350	21	42
200	250	255	510	105	210	189	378	23	46
250	300	270	540	110	220	201	402	24	48
300	400	295	590	120	240	221	442	27	54
400	500	320	640	130	260	238	476	29	58
500	600	340	680	135	270	253	506	31	62
600	700	355	710	145	290	266	532	32	64
700	800	375	750	150	300	278	556	33	66
800	900	390	780	155	310	289	578	35	70
900	1,000	400	800	160	320	300	600	36	72
1,000	1,200	425	850	165	330	318	636	39	78
1,200	1,400	450	900	170	340	336	672	41	82
1,400	1,600	470	940	175	350	351	702	43	86
1,600	1,800	490	980	180	360	366	732	44	88
1,800	2,000	505	1,010	185	370	378	756	45	90
2,000	2,500	545	1,090	190	380	408	816	49	98
2,500	3,000	580	1,150	195	390	432	864	52	104
3,000	4,000	635	1,270	210	420	474	948	58	116
4,000	5,000	685	1,370	225	450	513	1,026	61	122
5,000	6,000	730	1,460	235	470	546	1,092	65	130
6,000	7,000	770	1,540	245	490	573	1,146	68	136
7,000	8,000	800	1,600	250	500	600	1,200	72	144
8,000	9,000	835	1,670	255	510	624	1,248	75	150
9,000	10,000	865	1,730	260	520	645	1,290	78	156
10,000	12,000	875	1,750	270	540	687	1,374	82	164
12,000	14,000	885	1,770	275	550	723	1,446	87	174
14,000	16,000	900	1,800	280	560	756	1,512	90	180
16,000	18,000	940	1,880	285	570	786	1,572	94	188
18,000	20,000	975	1,950	290	580	813	1,626	98	196
20,000	25,000	1,055	2,000	315	630	876	1,752	105	210
25,000	30,000	1,130	2,000	340	680	933	1,866	112	224
30,000	35,000	1,205	2,000	360	720	981	1,962	119	238
35,000	40,000	1,275	2,000	380	760	1,026	2,000	124	248
40,000	45,000	1,340	2,000	400	800	1,068	2,000	129	258
45,000	50,000	1,400	2,000	420	840	1,104	2,000	135	270
50,000	55,000	1,460	2,000	440	880	1,140	2,000	140	280
55,000	60,000	1,515	2,000	455	910	1,173	2,000	145	290
60,000	65,000	1,565	2,000	470	940	1,206	2,000	150	300
65,000	70,000	1,610	2,000	485	970	1,236	2,000	155	310
70,000	75,000	1,655	2,000	500	1,000	1,263	2,000	160	320
75,000	80,000	1,695	2,000	510	1,020	1,293	2,000	165	330
80,000	85,000	1,730	2,000	520	1,040	1,317	2,000	170	340
85,000	90,000	1,760	2,000	530	1,060	1,344	2,000	175	350
90,000	95,000	1,790	2,000	540	1,080	1,368	2,000	180	360
95,000	100,000	1,815	2,000	545	1,090	1,392	2,000	185	370
100,000	110,000	1,835	2,000	550	1,100	1,437	2,000	195	390
110,000	120,000	1,855	2,000	555	1,110	1,479	2,000	205	410
120,000	130,000	1,875	2,000	560	1,120	1,521	2,000	215	430
130,000	140,000	1,890	2,000	565	1,130	1,557	2,000	225	450
140,000	150,000	1,900	2,000	570	1,140	1,593	2,000	235	470
150,000	160,000	1,935	2,000	580	1,160	1,629	2,000	245	490
160,000	170,000	1,965	2,000	590	1,180	1,662	2,000	255	510
170,000	180,000	1,990	2,000	600	1,200	1,695	2,000	265	530
180,000	190,000	2,010	2,010	605	1,210	1,725	2,000	275	550
190,000	200,000	2,030	2,030	610	1,220	1,755	2,000	285	570
200,000	210,000	2,055	2,055	620	1,240	1,782	2,000	295	590
210,000	230,000	2,100	2,100	635	1,270	1,836	2,000	315	630
230,000	250,000	2,155	2,155	650	1,300	1,890	2,000	335	670
250,000	275,000	2,215	2,215	670	1,340	1,950	2,000	360	720
275,000	300,000	2,275	2,275	690	1,380	2,000	2,000	385	770

** = See § 55.11, "Highway."

(Figure 3-9) Table of distances for storage of explosive materials.

DONOR WEIGHT (POUNDS)		MINIMUM SEPARATION DISTANCE OF ACCEPTOR FROM DONOR WHEN BARRICADED (FEET)		MINIMUM THICKNESS OF ARTIFICIAL BARRICADES (INCHES)
OVER	NOT OVER	AMMONIUM NITRATE	BLASTING AGENT	
0	100	3	11	12
100	300	4	14	12
300	600	5	18	12
600	1,000	6	22	12
1,000	1,600	7	25	12
1,600	2,000	8	29	12
2,000	3,000	9	32	15
3,000	4,000	10	36	15
4,000	6,000	11	40	15
6,000	8,000	12	43	20
8,000	10,000	13	47	20
10,000	12,000	14	50	20
12,000	16,000	15	54	25
16,000	20,000	16	58	25
20,000	25,000	18	65	25
25,000	30,000	19	68	30
30,000	35,000	20	72	30
35,000	40,000	21	76	30
40,000	45,000	22	79	35
45,000	50,000	23	83	35
50,000	55,000	24	86	35
55,000	60,000	25	90	35
60,000	70,000	26	94	40
70,000	80,000	28	101	40
80,000	90,000	30	108	40
90,000	100,000	32	115	40
100,000	120,000	34	122	50
120,000	140,000	37	133	50
140,000	160,000	40	144	50
160,000	180,000	44	158	50
180,000	200,000	48	173	50
200,000	220,000	52	187	60
220,000	250,000	56	202	60
250,000	275,000	60	216	60
275,000	300,000	64	230	60

(Figure 3-10) Table of distances for storage of low explosives.

POUNDS		DISTANCES IN FEET		
OVER	NOT OVER	FROM INHABITED BUILDING	FROM PUBLIC RAILROAD AND HIGHWAY	FROM ABOVE-GROUND MAGAZINE
0	1,000	75	75	50
1,000	5,000	115	115	75
5,000	10,000	150	150	100
10,000	20,000	190	190	125
20,000	30,000	215	215	145
30,000	40,000	235	235	155
40,000	50,000	250	250	165
50,000	60,000	260	260	175
60,000	70,000	270	270	185
70,000	80,000	280	280	190
80,000	90,000	295	295	195
90,000	100,000	300	300	200
100,000	200,000	375	375	250
200,000	300,000	450	450	300

(Figure 3-11) Table of distances for storage of low explosives.

Housekeeping

Magazines are to be kept clean, dry, and free of grit, paper, empty packages and containers, and rubbish. Floors are to be regularly swept. Brooms and other utensils used in the cleaning and maintenance of magazines must have no spark-producing metal parts, and may be kept in magazines. Floors stained by leakage from explosive materials are to be cleaned according to instructions of the explosives manufacturer. When any explosive material has deteriorated, it is to be destroyed in accordance with the advice or instructions of the manufacturer. The area surrounding magazines is to be kept clear of rubbish, brush, dry grass, or trees (except live trees more than 10 feet tall, for not less than 25 feet in all directions. Volatile materials are to be kept a distance of not less than 50 feet from outdoor magazines. Living foliage which is used to stabilize the earthen covering of a magazine need not be removed.

INVENTORY

Inventories must be kept on all explosives, blasting agents, detonators, and primers, including mixed binaries. Permanent storage inventories are maintained by the magazine operator; working field inventories are maintained by the blaster-in-charge on a daily basis. Permanent storage inventories must be by withdrawal, return, and resupply with physical inventory checks at least monthly. Permanent storage inventory should use a "two-mode system," with inventory sheets in each magazine and a hard-bound inventory book in the possession of the magazine operator. Magazine and field storage inventories must balance at the start and end of each day. Inventory inconsistencies *must* be resolved upon discovery, with full explanation recorded in the hard-bound inventory book.

Inventory entries must be made in ink, and include: a) date, b) material and quantity removed/returned/resupplied, c) name of person being issued or returning materials, or in case of resupply, name of manufacturer, d) lot number and date of manufacture, and e) name of person issuing/receiving materials.

Inventories should be kept by "cartridge count" and "cap count," not by box or carton count. "Cap count" means the count of individual detonators such as "25 MS delay caps, 100 each," not "1/4 box 25 MS delays." "Cartridge count" means the count of individual units of explosive such as "Tovex 800, 54 sticks," or "E-Cord, 700 feet," NOT "1/2 case Tovex 800." Detonators, primers, and detonating cords are packaged by unit count (each, feet, meters), resulting in a specific number of units per box or spool for a given product; once that number is known, there is no reason to open factory-sealed boxes to obtain an accurate count. Cartridge explosives do not share that reliability, and the contents of each case must be counted when it is opened; however, until opened, the factory seals should be left on cases and the inventory should read something like "5 cases + 38 sticks" (meaning there are five sealed cases, and one opened case containing 38 sticks, in the magazine). Blasting agents are normally inventoried by weight (pounds), but sack or bag counts may also be used.

Explosives Storage Magazine Condition Report

Inspector:	*Magazine location:* Section Range Township County
National Forest:	*Magazine name or number:* / *Date:*
Designated individual responsible for magazine: Name Title	*Other personnel, if any, designated secondary responsibility:*

Do these personnel hold current Blaster's Certificate authorizing handling, transportation, and storage? ☐ *Yes* ☐ *No*

Is this a Forest Service magazine? ☐ *Yes* ☐ *No*

I. Magazine Site:

A. Conformance with American Table of Distances:

Is maximum storage stenciled or painted on inside wall of magazine? ☐ Yes ☐ No

Maximum quantity of explosives authorized for storage in magazine _____lbs.

Quantity stored _____lbs.

Barricaded? ☐ Yes ☐ No

Distance to nearest inhabited building, dwelling _____feet

Distance to nearest public road _____feet

Distance to nearest ski lift, downhill ski run, or other public facility _____feet

Site *does* ☐ *does not* ☐ conform to standards

B. Is there utilization of natural barriers? Describe:

_____

_____

_____

_____

_____

C. Drainage of terrain near magazine, (slope, direction of flow, soil, etc.). Describe:

_____

_____

_____

_____

D. Exposure to Sun (south slope, north slope, shaded by trees, covered by snowbank, etc.). Describe:

_____

_____

_____

_____

E. Accessibility to other than authorized personnel, i.e. exposed to careless discharge of firearms, vandalisms, etc. Describe:

_____

_____

_____

_____

_____

_____

_____

(Figure 3-12) Explosives Storage Magazine Condition Report form.

STORING EXPLOSIVES IN REMOTE, UNINHABITED, ROADLESS LOCATIONS

In remote, uninhabited, roadless locations (backcountry or wilderness), store explosives and detonators separately behind natural barriers in an area out of site and a safe distance from the trail, and any campsite, overlook, or other place of normal public access. Make secure from theft as is practicable. Clear away leaves, dead grass, and other flammable materials. Protect explosives from water with fire-resistant waterproofed canvas; slope the ground to keep away surface water. Post explosives with a red-on-white warning sign reading, "EXPLOSIVES-KEEP OFF" in letters at least 1-1/2" high. The sign should be placed on or against the explosives, but where it will be seen by anyone approaching the cache.

Transport only an adequate amount of explosives to last for one work period (five or 10 days). Do not leave explosives unattended for more than 12 hours. Where practical, transport magazines by plane or helicopter.

STORING FIRELINE EXPLOSIVES IN THE FIELD

Using portable type 2 (see 27 CRF part 55, page 27) magazines where possible. A type 3 (see 27 CFR part 55, page 27) magazine or an explosive transport truck may be used if storage distance and attendance regulations are adhered to and the truck is kept locked.

When it is not possible to store explosives in an approved magazine, the explosives will be stored in a secured area away from the camp. If possible, store explosives behind a natural or man made barrier. The explosives shall be covered with a fire resistant waterproof tarpaulin and remain under constant surveillance by a guard. Post the explosives with clearly visible red-on-white warning signs reading, "EXPLOSIVES-KEEP OFF". Detonators shall never be stored with fireline explosives. In the event of a lightning storm, all personnel including the guard will move at least 1000 feet from the storage area

TWO-COMPONENT CAP SENSITIVE EXPLOSIVES

Store both components in an approved magazine. An approved magazine for two-component explosives is a locked cabinet for each component. However, when mixed, it becomes a Class A explosive and must be store according to CFR 27 part 55.

Chapter 4
TRANSPORTATION

GENERAL INFORMATION

Explosives pose additional risk to health, safety, and property during transportation. Therefore, special requirements have been developed for transporting various types of explosives by motor vehicle, over water, by rail, and by aircraft.

In general, shipments of explosives will comply with the Code of Federal Regulations CFR 49 and state and local (municipal) laws. Other regulations may also need to be addressed, such as those from the United States Coast Guard and port and harbor authorities.

TRANSPORTING EXPLOSIVES BY MOTOR VEHICLE

Operator Requirements

Vehicle operators must hold a valid state commercial motor vehicle operator's license for the class of vehicle being operated, including any required hazardous materials endorsements. Vehicles transporting explosives shall be driven by drivers certified to transport explosives in accordance with CFR 49, Part 383 and must be qualified operators as per CFR 49, Part 391.

The driver must be familiar with the traffic regulations and state laws governing the transportation of explosives. This certified individual must remain in or near the vehicle at all times.

When transporting explosives, a written document describing the type and quantity of explosives shall be in the vehicle and readily available.

When the driver is at the vehicle's controls, the documents shall be:

a. Within immediate reach while the driver is restrained by the lap belt.
b. Either readily visible to a person entering the driver's compartment, or in a holder mounted to the inside of the door on the driver's side of the vehicle.

When the driver is not at the vehicle's controls, the shipping paper shall be:

a. In a holder mounted to the inside of the door on the driver's side of the vehicle; or
b. On the driver's seat in the vehicle.

The following documents must be in the possession of the driver:
a. A document with instructions on what to do in the event of an accident or delay. The name of the explosive hauled and names and phone numbers of all persons (Chemtrec) to contact in the event of an accident must be on this document.
b. Proper shipping papers for hazardous materials (Hazardous Materials Bill of Lading, see Figure 4-1).
c. A written route plan for the transportation of explosives.
d. Copy of CFR 49 part 397, transportation of hazardous materials; driving and parking rules, Federal Motor Carrier Safety Regulations.

CFR 49 PART 397

Transportation of Hazardous Materials; Driving and Parking Rules

Application of the rules in this part:

(a) Except as provided in paragraph (c) of this section, the rules in this part apply to each motor carrier engaged in the transportation of hazardous materials by a motor vehicle which must be marked or placarded in accordance with 177.823 of this title and to-
  (1) Each officer or employee of the carrier who performs supervisory duties related to the transportation of hazardous materials; and
  (2) Each person who operates or who is in charge of a motor vehicle containing hazardous materials.
(b) Each person designated in paragraph (a) of this section must know and obey the rules in this part.
(c) Intracity operations: The rules in this part do not apply to a driver or a vehicle wholly engaged in exempt intracity operations as defined in 390.16 of this chapter.

Compliance with Federal Motor Carrier Safety Regulations

A motor carrier or other person to whom this part is applicable must comply with the rules in Part 390 through 397 inclusive of this subchapter when he or she is transporting hazardous materials by a motor vehicle which must be marked or placarded in accordance with 177.823 of this title.

State and Local Laws, Ordinances, and Regulations

Every motor vehicle containing hazardous materials must be driven and parked in compliance with the laws, ordinances, and regulations of the jurisdiction in which it is being operated, unless they are at variance with specific regulations of the Department of Transportation which are applicable to the operation of that vehicle and which impose a more stringent obligation or restraint.

Attendance and Surveillance of Motor Vehicles

Application of the rules in this part:

(a) Except as provided in paragraph (b) of this section, a motor vehicle which contains Class A or Class B explosives must be attended at all times by its driver or a qualified representative of the motor carrier that operates it.
(b) The rules in paragraph (a) of this section do not apply to a motor vehicle which contains Class A or Class B explosives if all the following conditions exist:

EXPLOSIVES — HAZARDOUS MATERIALS

Bill of Lading

If Danger of Fire — EVACUATE AREA — Chemtrec 1-800-424-9300

ACCIDENT — NOTIFY

Fatal - Call D.O.T. Portland, Oregon 1-503-221-4902

Other - Call Local Authorities

Date _____

Ship to: _____ Route Plan: _____

NO. PKGS.	TYPE PKG.	PROPER SHIPPING NAME AND	HAZARD CLASS	IDENT. NO.	EXEMPT PERMIT	GROSS WEIGHT
	Bxs	HIGH EXPLOSIVE	CLASS A EXPLOSIVE			
	Bxs	PROPELLANT EXPLOSIVE, LIQUID	CLASS B EXPLOSIVE			
	Bxs	PROPELLANT EXPLOSIVE, SOLID	CLASS B EXPLOSIVE			
	Bxs	BLASTING CAPS	CLASS EXPLOSIVE			
	Bxs	BLASTING CAPS - ELECTRIC	CLASS EXPLOSIVE			
	Bxs	DETONATORS	CLASS EXPLOSIVE			
	Bxs	DETONATORS - ELECTRIC	CLASS EXPLOSIVE			
	Bxs	DETONATING PRIMER	CLASS EXPLOSIVE			
	Bxs	DETONATING CORD	CLASS EXPLOSIVE			
	Bxs	CORDEAU DETONANT FUSE	CLASS C EXPLOSIVE			
	Bxs	FUSE, SAFETY	CLASS C EXPLOSIVE			
	Bxs	IGNITER CORD	CLASS C EXPLOSIVE			
	Bxs	FUSE LIGHTER	CLASS C EXPLOSIVE			
	Bags	AMMONIUM NITRATE - FUEL OIL MIXTURE	BLASTING AGENT			
	Bags		BLASTING AGENT			
	Bags	AMMONIUM NITRATE FERTILIZER	OXIDIZER	UN2067		
				TOTAL WEIGHT		

This is to certify that the above named materials are properly classified, described, packaged, marked and labeled; and are in proper condition for transportation according to the applicable regulations for the Department of Transportation.

PLACARDS: — Supplied — Applied — A — B — DANGEROUS — NONE REQUIRED

(Circle as Required) OXIDIZER, UN 2067 — BLASTING AGENT

SIGNATURE _____

(Figure 4-1) Sample Hazardous Materials Bill of Lading.

Date:________________ Location:________________________

Hole No. Vertical ☐ Horizontal ☐ Diameter in.	Height of Face (Ft.)	Depth of Hole (Ft.)	Spacing (Ft.)	Burden (Ft.)	Explosives				Stemming (Ft.)	Type Detonator	Delay Period
					Grade / Pounds	Grade / Pounds	Grade / Pounds	Total per Hole			

Time Loading Started________ Finished________ Fired________

Type of Blasting Machine________________

Loading Wire________ Connecting Wire________

Plan of Connections________________

Identify Job Location by station or dimension to known structure or object. Show North Point.

REMARKS: (If blast was seismic recorded state by whom):

____

____

____

____

(Figure 4-2)

(1) The vehicle is located on the property of a motor carrier, on the property of a shipper or consignee of the explosives, in a safe haven, or, in the case of a vehicle containing 50 pounds or less of either Class A or Class B explosives, on a construction or survey site; and
(2) The lawful bailee of the explosives is aware of the nature of the explosives the vehicle contains and has been instructed in the procedures he must follow in emergencies; and
(3) The vehicle is within the bailee's unobstructed field of view, or is located in a safe haven.

(c) A motor vehicle which contains hazardous materials other than Class A or Class B explosives and which is located on a public street or highway or the shoulder of a public highway must be attended by its driver. However, the vehicle need not be attended while its driver is performing duties which are incident and necessary to his or her duties as the operator of the vehicle.

(d) For purposes of this section:
(1) A motor vehicle is attended when the person in charge of the vehicle is on the vehicle, awake, and not in a sleeper berth, or is within 100 feet of the vehicle and has it within his unobstructed field of view.
(2) A qualified representative of a motor carrier is a person who:
(a) Has been designated by the carrier to attend the vehicle;
(b) Is aware of the nature of the hazardous materials contained in the vehicle he attends;
(c) Has been instructed in the procedures he must follow in emergencies; and
(d) Is authorized to move the vehicle and has the means and ability to do so.
(e) Must be at least 21 years old.
(3) A safe haven is an area specifically approved in writing by local, state, or federal governmental authorities for the parking of unattended vehicles containing Class A or Class B explosives.
(4) The rules in this section do not relieve a driver from any obligation imposed by law relating to the placing of warning devices when a motor vehicle is stopped on a public street or highway.

Parking

A motor vehicle which contains Class A or Class B explosives must not be parked under any of the following circumstances:

(a) On or within five feet of the traveled portion of a public street or highway,
(b) On private property (including premises of a fueling or eating facility) without the knowledge and consent the person who is in charge of the property and who is aware of the nature of the hazardous materials the vehicle contains, or
(c) Within 300 feet of a bridge, tunnel, dwelling, building, or place where people work, congregate, or assemble, except for brief periods when the necessities of operation require the vehicle to be parked and make it impracticable to park the vehicle in any other place.

A motor vehicle which contains hazardous materials other than Class A or Class B explosives must not be parked on or within five feet of the traveled portion of public street or highway except for brief periods when the necessities of operation require the vehicle to be parked and make it impracticable to park the vehicle in any other place.

Routes

(a) Unless there is no practicable alternative, a motor vehicle which contains hazardous materials must be operated over routes which do not go through or near heavily populated areas, places where crowds are assembled, tunnels, narrow streets, or alleys. Operating convenience is not a basis for determining whether it is practical to operate a motor vehicle in accordance with this paragraph. This paragraph does not apply to radioactive materials.

(b) Before a motor carrier requires or permits a motor vehicle containing Class A or Class B explosives to be operated, the carrier must prepare a written plan of a route that complies with the rules in paragraph "A" of this section for that vehicle and must furnish a copy of the written plan to the driver. However, the driver may prepare the written plan as agent for the motor carrier when the driver begins a trip at a location other than the carrier's terminal.

Fires

(a) A motor vehicle containing hazardous materials must not be operated near an open fire unless its driver has first taken precautions to ascertain that the vehicle can safely pass the fire without stopping.

(b) A motor vehicle containing hazardous materials must not be parked within 300 feet of an open fire.

(c) The "safe time" during which a fire on an explosives truck may be safely fought is: NEVER.

Smoking

No person may smoke or carry a lighted cigarette, cigar, or pipe on or within 25 feet of:

(a) A motor vehicle which contains explosives, oxidizing materials, or flammable materials; or

(b) An empty tank motor vehicle which has been used to transport flammable liquids or gases and which, when so used, was required to be marked or placarded in accordance with the rules in 177.823 of this title.

Fueling

When a motor vehicle which contains hazardous materials is being fueled:

(a) Its engine must not be operating; and

(b) A person must be in control of the fueling process at the point where the fuel tank is filled.

Tires

(a) If a motor vehicle which contains hazardous materials is equipped with dual tires on any axle, its driver must stop the vehicle in a safe location at least once during each two hours or 100 miles of travel, whichever is less, and must examine its tires. The driver must also examine the vehicle's tires at the beginning of each trip and each time the vehicle is parked.

(b) If, as a result of an examination pursuant to paragraph (a) of this section, or otherwise, a tire is found to be flat, leaking, or improperly inflated, the driver must cause the tire to be repaired, replaced, or properly inflated before the vehicle is driven. However, the vehicle may be driven to the nearest safe place to perform the required repair, replacement, or inflation.

(c) If, as the result of an examination pursuant to paragraph (a) of this section, or otherwise, a tire is found to be overheated, the driver shall immediately cause the overheated tire to be removed and placed at a safe distance from the vehicle. The driver shall not operate the vehicle until the cause of the overheating is corrected.

(d) Compliance with the rules in this section does not relieve a driver from the duty to comply with the rules in 397.5 and 397.7.

Instructions and Documents

(a) A motor carrier that transports Class A or Class B explosives must furnish the driver of each motor vehicle in which the explosives are transported with the following documents:

(1) A copy of the rules in this part; and

(2) (Reserved)

(3) A document containing instructions on procedures to be followed in the event of accident or delay. The documents must include the names and telephone numbers of persons (including representatives of carriers or shippers) to be contacted, the nature of the explosives being transported, and the precautions to be taken in emergencies such as fires, accidents, or leakages.

(b) A driver who receives documents in accordance with paragraph (a) of this section must sign a receipt for them. The carrier shall retain the receipt in his files for one year at his or her principal place of business. However, upon a written request to, and with the approval of, the Director, Regional Motor Carrier Safety Officer for the region in which a motor carrier has his principal place of business, the carrier may maintain the receipts at a regional or terminal office. The addresses and jurisdictions of the Directors of Regional Motor Carrier Safety Offices are shown in 390.40 of this subchapter.

(c) A driver of a motor vehicle which contains Class A or Class B explosives must be in possession of, be familiar with and be in compliance with:

(1) The documents specified in paragraph "A" of this section;

(2) The documents specified in 177.817 of Chapter 1 of this title; and

(3) The written route plan specified in 397.9(b).

Vehicle Requirements

Condition

Thoroughly inspect all vehicles that transport explosives and correct all deficiencies before use. Vehicles, including engines, shall be clean, in good mechanical condition, and free of leaks. All safety equipment must be in good repair.

If vehicles do not have an enclosed bed, cover the bed with a flame and moisture-proof tarpaulin or other effective protection against moisture and sparks. All vehicles transporting explosives shall have tight floors. Cover any exposed spark-producing metal on the inside of the bed with wood or other non-sparking materials to prevent contact with explosive containers. Do not load explosives above the sides of an open-bed vehicle.

Secure any package containing explosives to prevent movement while vehicle is moving.

Fire Extinguishers

Equip every motor vehicle used for transporting explosives with at least two 10-bc or higher rated fire extinguishers. Securely mount the extinguishers near the driver for immediate access. Only extinguishers listed or approved by the Underwriter's Laboratories, or Factory Mutual Liability Insurance Company of America are suitable for use on explosives-carrying vehicles. The rating is shown on the approved label.

Gross Weight Capacity

Vehicles shall be strong enough to carry the load without exceeding rated weight capacity.

Placarding

For all DOT placarding shall be in accordance with 49 CFR (Part 172.500, Subpart F Placarding). Mark or placard vehicles transporting explosives on both sides, front and rear (Table 4-2). When mixed loads are transported, display the placard for the most hazardous explosive. Explosives placards shall be square on-point (diamond shape) and measure 10 3/4 inches on each side. The placards shall be orange with a white border and the symbol and print shall be black.

The vehicle does not require placards when carrying blasting caps (fuse-type or electric) in quantities of 1000 or less, or just blasting agents or Class C explosives in quantities of 1000 pounds or less (Table 4-1).

When carrying 1000 pounds or less of unmixed components of explosives (two-component), placards are not required.

Blasting agents in quantities greater than 1000 pounds require "BLASTING AGENT" placards (Table 4-1).Other explosive materials in any quantity such as dynamite, mixed component explosives, primers, fireline explosives, or avalanche ammunition require "EXPLOSIVE A" placards (Table 4-2).

Blasting caps in quantities greater than 1000 require “EXPLOSIVE A” placards.

Loading and Unloading

No explosives shall be loaded or unloaded from a vehicle with the engine running.

No bale hooks or other metal tools shall be used for the loading, unloading, or other handling of explosives. No package or other container of explosives, except barrels or kegs, shall be rolled. No packages of explosives shall be thrown or dropped during the process of loading, unloading, or handling. Special care shall be exercised to ensure that packages or other containers containing explosives shall not catch fire from sparks or hot gases from the exhaust or tail pipe.

DETONATORS

Exploding Bridgewire Detonators (EBWs) contain no primary explosives and therefore may be transported with other explosives when packaged in the original manufacturer’s container (see 49 CFR, 173.113 and 49 CFR 177.848 (DOT).

Blasting caps, electric or fuse, contain a primary explosive and therefore may not be transported in the same vehicle with other explosives, unless packed in wooden or fiberboard boxes as per 49 CFR 173.66 and 173.68, and CFR 177.835. Boxes are in turn, loaded into portable containers or separate compartments that meet the requirements of the Institute of Makers of Explosives IME 22 Standard. When electric blasting caps are carried in a vehicle equipped with a two-way radio, the transmitter must be turned off when caps are placed into or removed from the portable container.

A. Unless otherwise specified in this section, detonators must be packed in accordance with the following:
   (1) They must be snugly packed in strong inside packaging.
   (2) Inside packaging must be snugly packed in an outside packaging specified in paragraph "E" of this section.
   (3) For devices containing no more than 10 grams of explosive (excluding ignition and delay charges):
      (a) No more than 50 devices may be packed in one inside packaging;
      (b) No more than 500 devices may be packed in one inside packaging; and
      (c) The gross weight of the completed package may not exceed 150 pounds or the gross weight permitted by the specification for the outside packaging used, whichever is less.
B. Detonators that are blasting caps (including percussion activated) or delay connectors in metal tubes, must be packed as specified in paragraph a of this section. In addition:
   (1) They must be packed in inside packaging with the open ends of any device covered with an appropriate cushioning material;
   (2) Inside packaging must be snugly packed in intermediate packaging consisting of cartons, or wrappings made of paper, plastic, or pasteboard;
   (3) Intermediate packaging must be separated from the outside packaging by at least one inch of cushioning material; and
   (4) For devices containing no more than three grams of explosive (excluding ignition and delay charges):
      (a) No more than 110 devices may be packed in one inside packaging; and
      (b) No more than 5000 devices may be packed in one outside packaging.
C. Detonators that are electric blasting caps, delay connectors in plastic sheaths, or blasting caps with empty plastic tubing, must be packed as specified in paragraph (A) of this section, except that:
   (1) Devices containing no more than three grams of explosive (excluding ignition and delay charges) may be packed as follows:
      (a) No more than 100 devices may be packed in one inside packaging; and
      (b) No more than 1000 devices may be packed in one outside packaging.
   (2) Devices that are electric blasting camps with leg wires four feet long or longer, delay connectors in plastic sheaths, or blasting caps with empty plastic tubing 12 feet long or longer, and contain no more than

one gram of explosive (excluding ignition and delay charges) may be offered for transportation and transported in an IME Standard 22 container or compartment without the outside packaging specified in paragraph (E1) or (E2) of this section if:

(a) The devices are packed as specified in paragraph (1) and (A.3. a) of this section;

(b) There are no more than 1000 detonators in the IME Standard 22 contained or compartment; and

(c) No material is loaded on top of the IME Standard 22 container, or no material is loaded against the outside of the door of the IME Standard 22 compartment.

(3) Inside packaging is not required for electric blasting caps when packed in inside pasteboard tubes, or when their leg wires are wound on spools with the caps either placed inside the spool or securely taped to the wire on the spool, so as to restrict freedom of movement of the caps and to protect them from impact forces.

D. Detonators that are blasting caps with safety fuse, blasting caps with metal clad mild detonating cord, blasting caps with detonating cord, or blasting caps with shock tubes, must be packed in accordance with the requirements of paragraph a of this section, except that:

(1) The blasting caps are not required to be attached to the safety fuse, metal clad mild detonating cord, detonating cord, or shock tube; and

(2) Inside packaging are not required if the packing configuration restricts freedom of movement of the caps and protects them from impact forces.

E. Detonators with or without inside packaging as provided for in paragraphs (A) through (D) of this section, must be packed in the following outside packaging:

(1) Specifications 14, 15A, 16A or 19B && 178.165, 178.168, 178.185, 178.191 of this subchapter. Wooden boxes.

(2) DOT Specification 12H, 23F, or 23H && 178.209., 178.214, 178.219 of this subchapter. Fiberboard box.

(3) IME Standard 22 container or compartment when the detonators conform with conditions and limitations specified in paragraph (C. 2) of this section.

F. Each outside packaging containing detonators must be plainly marked "DETONATORS - HANDLE CAREFULLY" and bear the appropriate explosives label specified in 172.411 of this subchapter.

G. Devices subject to this section and approved by an agency listed in 173.86(b) before January 1, 1980 may be transported subject to conditions of the approval and in accordance with regulations in effect on October 31, 1979, until December 31, 1985. Applicability of this paragraph is further limited to detonators packaged for transportation prior to January 1, 1985.

[Amdt. 173-134, 44 FR 70730, Dec. 10, 1979, as amended by Amdt. 173-149, 46 FR 49892, Oct. 8, 1981; Amdt. 173-182, 50 FR 804, Jan. 7, 1985]

Standard For the Safe Transportation of Class C Detonators (Blasting Caps) in a Vehicle with Certain Other Explosives

IME Safety Library Publications No. 22

Class C detonators (blasting caps) and Class 1.1 or 1.2 or 1.3 explosives may be transported together on a vehicle using IME containers or compartments under the following conditions:

Products

1. As used in this standard, Class C detonators (blasting caps) include detonators approved for transportation as Class C explosives by the U.S. Department of Transportation (DOT).

2. As used in this standard, Class A or Class B explosives include all materials so described by regulation of the U.S. Department of Transportation in 49 CFR Part 173. As used, Class 1.1, 1.2 or 1.3 explosives do not include initiating explosives (e.g.: Class A detonators) and any explosives forbidden by the U.S. Department of Transportation in 49 CFR, Sections 171.101 and 173.51.

IME Containers or Compartments

1. A portable IME contained place within and readily removable from the cargo-carrying space of the vehicle.

2. An IME container securely attached:

   a. Above the cab of the vehicle.

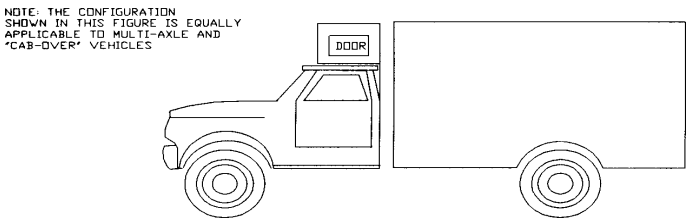

(Figure 4-3) IME container above cab.

   b. To the vehicle frame under the cargo space.

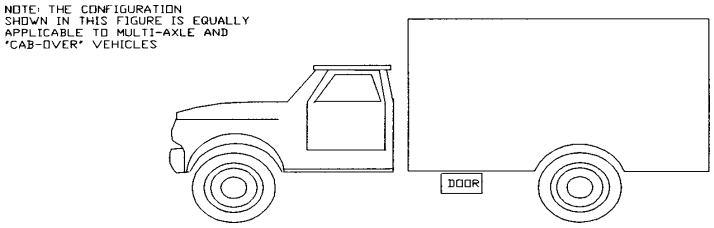

(Figure 4-4) IME container under truck body.

3. A built-in IME compartment in the cargo space of the vehicle (Figure 4-7).

   a. The IME container or compartment must provide for total enclosure of the contents.

   b. The top, lid or door, sides and bottom of each IME container or compartment must be of laminate construction consisting of A/C grade or better exterior plywood, sheetrock and low-carbon steel. In order of arrangement, from inside to outside, the laminate must consist of the following with minimum thickness of each lamination as indicated: 1/2-inch plywood, 1/2-inch sheetrock, 1/8-inch low-carbon steel, and 1/2-inch plywood with the 1/4-inch plywood to the exterior of the IME container or compartment. See Figure 4-9 for details of laminate construction.

c. The laminated materials must be securely bound together by waterproof adhesive or other equally effective mea

d. The steel at the joints of laminations must be secured by continuous fillet welds.

e. The interior surfaces of the IME container or compartment must be constructed so as to prevent contact of conte

f. There must be direct access to the IME container or into an IME compartment from outside the vehicle.

g. Each IME container or compartment must have a snug-fitting continuous piano-type hinged lid or door and be e

h. Without permitting direct access to contents under normal conditions, the locking or hinging mechanisms must

i. The exterior of the IME container or compartment must be weather-resistant.

j. As an alternative to the construction requirement shown in paragraph (b) above, an IME container for use only

1. The top, lid or door, sides and bottom of each IME container must be of laminate construction consisting of A to outside, the laminate must consist of the following with the minimum thickness of each lamination as in constructed inside to outside in that order. See Figure 4-9 for details of laminate construction.

2. The hardwood must be fastened together with wood screws, the 1/2-inch plywood must be fastened to the har sheet metal must be attached to the exterior of the IME container with screws.

Safety

HAZARD CLASS	*PLACARD*
Class A Explosives	**EXPLOSIVES A**[1]
Class B Explosives	**EXPLOSIVES B**[2]
Poison A	**POISON GAS**[1]
Flammable Solid (Dangerous When Wet Label Only)	**FLAMMABLE SOLID W**[3]
Radioactive Material	**RADIOACTIVE**[4,5]
Radioactive Material: Uranium hexafluoride, fissle (containing 0.7 pct or less U^{235})	**RADIOACTIVE**[4] **and CORROSIVE**[6]
Radioactive Material: Uranium hexafluoride, low specific activity (containing 0.7 pct or less U^{235})	**RADIOACTIVE**[4,5] **and CORROSIVE**[6]

1. See sec. 172.510(a)

2. **EXPLOSIVES B** placard not required if the transport vehicle or freight container contains class A explosives and is placarded **EXPLOSIVES A** as required.

3. **FLAMMABLE SOLID "W"** placard is required only when the **DANGEROUS WHEN WET** label is specified in Sec. 172.101 for a material classed as a Flammable Solid.

4. Applies only to any quantity of packages bearing the **RADIOACTIVE** Yellow 111 label. (See Sec. 172.403)

5. For exclusive use shipments (See Sec. 173.403) of low specific activity radioactive materials transported in accordance with Sec. 1 73.425(b) or (c).

6. **CORROSIVE** placard not required for shipments of less than 1000 pounds gross weight.

(Figure 4-5) Placarding requirements.

Table 4-2.—Placarding requirements.

HAZARD CLASS	*PLACARD*
Class C Explosives	**DANGEROUS[1,9]**
Blasting Agents	**BLASTING AGENTS[9,10]**
Nonflammable Gas	**NONFLAMMABLE GAS[8]**
Nonflammable Gas (Chlorine)	**CHLORINE[7]**
Nonflammable Gas (Fluorine)	**POISON**
Nonflammable Gas (Oxygen, cryogenic liquid)	**OXYGEN**
Flammable Gas	**FLAMMABLE GAS[8]**
Combustible Liquid	**COMBUSTIBLE[3,4]**
Flammable Liquid	**FLAMMABLE**
Flammable Solid	**FLAMMABLE SOLID[5]**
Oxidizer	**OXIDIZER[9,10]**
Organic Peroxide	**ORGANIC PEROXIDE**
Poison B	**POISON**
Corrosive Material	**CORROSIVE[6]**
Irritating Material	**DANGEROUS**

1. Applies only to a class C explosive required to be labeled with an **EXPLOSIVE C** label.

2. [Reserved]

3. **COMBUSTIBLE** placard required only when a material classed as a combustible liquid is transported in a packaging having a rated capacity of more than 110 gallons. a cargo tank, or a tank car.

4. A **FLAMMABLE** placard may be used on a cargo tank and a portable tank during transportation by highway and water and on a compartmented tank car containing materials classed as flammable liquid and combustible liquid.

5. Except when offered for transportation by water, a **FLAMMABLE** placard may be displayed in place of a **FLAMMABLE SOLID** placard except when a **DANGEROUS WHEN WET** label is specified for the material in Sec. 172.101 (See Table 4-1, this section.)

6. See Sec. 173.245(b) of this subchapter for authorized exceptions.

7. **CHLORINE** placard required only for a packaging having a rated capacity of more than 110 gallons; the **NONFLAMMABLE GAS** placard for packaging having a rated capacity of 110 gallons or less.

8. A **NONFLAMMABLE GAS** placard is not required on a motor vehicle displaying a **FLAMMABLE GAS** placard or an **OXYGEN** placard.

9. **BLASTING AGENTS, OXIDIZER and DANGEROUS** placards need not be displayed if a transport vehicle or freight container also contains Class A or B explosives and is placarded **EXPLOSIVES A** or **EXPLOSIVES B** as required.

10. Except for shipments by water, **OXIDIZER** placards need not be displayed if a freight container. motor vehicle, or rail car also contains blasting agents and is placarded **BLASTING AGENT** as required.

A transport vehicle or freight container containing two or more classes of materials requiring different placards specified in Table 4-2 may be placarded **DANGEROUS** in place of the separate placarding specified for each of those classes of material specified in Table 4-2. However, when 5,000 pounds or more of one class of materials is loaded therein at one loading. facility. the placard specified for that class in Table 4-2 must be applied. This paragraph does not apply to a portable tank, cargo tank, or tank car.

When the gross weight of all hazardous materials covered by Table 4-2 is less than 1,000 pounds. no placard is required on a transport vehicle or freight container for the Table 4-2 materials. A Table 4-1 material must be placarded as specified in Table 4-1. This paragraph does not apply to portable tanks. cargo tanks, tank cars. transportation by air or water, or transport vehicles and freight containers subject to Sec. 172.505.

Each transport vehicle and freight container that contains a material subject to the "Poison-inhalation Hazard" shipping paper description must be placarded "**POISON**" on each side and each end in addition to the placard required in Sec. 172.504. Duplication of the **POISON** placards is not required nor display of the UN class numbers at the bottom of additional placards required by this section.

(Figure 4-6) Placarding requirements.

Trailers

Do not haul explosives in small single-axle utility trailers. If a trailer is required for equipment, attach with a positive grounding system. Use a trailer only when needed for the job (i.e., compressor, tools, etc.).

Class A explosives may not be loaded into or carried on any vehicle if:

a. More than two cargo-carrying vehicles are in the combination;

b. Any full trailer in the combination has a wheel base of less than 184 inches.

c. The other vehicle in the combination contains any initiating explosive.

REPAIR

Do not take motor vehicles carrying explosives, blasting agents, or blasting supplies inside a garage or shop for repairs

ATTENDANCE AND SURVEILLANCE OF MOTOR VEHICLES

A. Except as provided in paragraph (B) of this section, a motor vehicle which contains 1.1 or 1.2 explosives. must be attended at all times by its driver or a qualified representative of the motor carrier that operates it.

B. The rules in paragraph (A) of this section do not apply to a motor vehicle which contains Class 1.1, 1.2 or 1.3 explosives if all of the following conditions exist:

1.The vehicle is located on the property of a motor carrier, on the property of a shipper or consignee of the explosives, in a safe haven, or, in the case of a vehicle containing 50 pounds or less of either 1.1 or 1.2 explosives, on a construction survey site; and

2. The lawful bailee* of the explosives is aware of the nature of the explosives the vehicle contains and has been instructed in the procedures he or she must follow in emergencies; and

NOTICE

Effective October, 1991 (voluntary compliance as of January 1991), many of the Department of Transportation's proper shipping names and all classifications were changed for domestic transportation. Although this system is now in effect, there are certain transition dates established to allow a smooth flow into the distribution channels.

The following two charts provide 1) a comparison of the old and new classifications for explosives and 2) the transition periods for use of the new names and and classifications. When you read through the IME's SLP's, please remember to refer to these charts to ensure compliance with applicable regulations:

CHART 1

OLD CLASSIFICATION	CURRENT CLASSIFICATION
CLASS A EXPLOSIVES	DIVISION 1.1 or 1.2
CLASS B EXPLOSIVES	DIVISION 1.2 or 1.3
CLASS C EXPLOSIVES	DIVISION 1.4
BLASTING AGENTS	DIVISION 1.5
(NO APPLICABLE CLASS)	DIVISION 1.6

(Figure 4-7)) Old and new classification of explosives.

CHART 2

TRANSITION PERIOD

1 October 1992	All new explosives must be classified under the new regulations.
1 October 1993	Mandatory compliance with new classification and hazard communication requirements (except placarding).
1 October 1994	Mandatory use of new (UN) placards, except DOT placards may be used for domestic highway transportation. Package manufacturers will only be permitted to make non-bulk packaging which meet United Nations performance standards.
1 October 1996	Mandatory use of performance oriented packaging standards (UN) for non-bulk packaging.
1 October 2001	Mandatory use of new (UN) placards for all modes of transportation.

(Chart 4-8) Transition periods for use of new names and classifications of explosives.

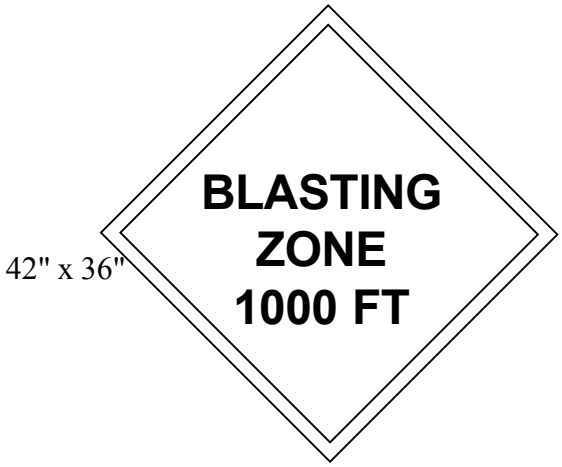

W22-1
48" x 48"

W22-2
42" x 36"

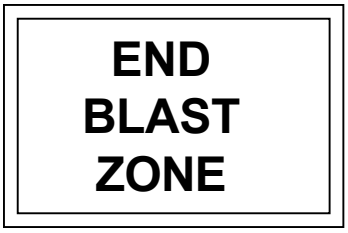

W22-3
42" x 36"

(Figure 4-8) Blasting signs shall be covered or removed when blasting operations are not being conducted.

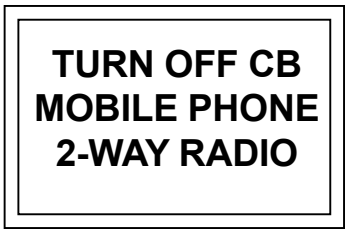

(Figure 4-10) New "Turn Off 2-Way Radio" signs shall be modified to read "Turn Off CB, Mobile Phone, 2-Way Radio." Modified signs may be used in place of the currently required sign immediately. Modified signs shall replace all currently required 2-way radio signs before January 1, 2000.

In the event of breakdown or collision, secure the area and promptly notify the local fire and police departments for assistance.

Except in an emergency, do not park any vehicle transporting explosives, even though attended, on any public street adjacent to or in proximity to any bridge, tunnel, dwelling, building, or place where people work or assemble.

C. For purposes of this section:

1. A motor vehicle is attended when the person in charge of the vehicle is on the vehicle, awake, and not in a sleeper berth, or is within 100 feet of the vehicle and has it within his or her unobstructed field of view.

2. A qualified representative of a motor carrier is a person who:
   (a) Has been designated by the carrier to attend the vehicle;
   (b) Is aware of the nature of the hazardous materials contained in the vehicle he or she attends;
   (c) Has been instructed in the procedures to be followed in emergencies; and
   (d) Is authorized to move the vehicle and has the means and ability to do so.

3. A safe haven is an area specifically approved in writing by local, state, or federal governmental authorities for the parking of unattended vehicles containing 1.1 or 1.2 explosives.

D. The rules in this section do not relieve a driver from any obligation imposed by law relating to the placing of warning devices when a motor vehicle is stopped on a public street or highway.

Parking

A motor vehicle which contains 1.1 or 1.2 explosives must not be parked:

1. On or within five feet of the traveled portion of a public street or highway;

2. On private property (including premises of a fueling or eating facility) without the knowledge and consent of the person who is in charge of the property and who is aware of the nature of the hazardous materials the vehicle contains; or
3. Within 300 feet of a bridge, tunnel, dwelling, building, or place where people work, congregate, or assemble, except for brief periods when the necessities of operation require the vehicle to be parked and make it impracticable to park the vehicle in any other place.

Routing and Scheduling

Unless there is no practical alternative, a motor vehicle which contains hazardous materials must be operated over routes which do not go through or near heavily populated areas, places where crowds are assembled, tunnels, narrow streets, or alleys. Operating convenience is not a basis for determining whether it impractical to operate a motor vehicle in accordance with this paragraph.

Plan routes and schedules to avoid densely populated areas, heavy traffic, adverse road and weather conditions, and night driving. Where present, follow designated routes established by local authorities through congested areas.

Railroad Grade Crossings

Any placarded vehicle or one carrying any amount of chlorine, must stop at railroad crossings.

Stops must be made within 50 feet of the crossing, but no closer than 15 feet. When it is safe to cross the tracks, do so; do not shift gears while on the tracks.

Stops need not be made at:

a. streetcar crossings or industrial switching tracks within municipalities.

b. crossings where a police officer or flagman is directing traffic.
c. crossings which are marked by a stop-and-go traffic light which is green.
d. abandoned rail lines and industrial or spur line crossings clearly marked "exempt."

Accidents and Explosives

In the event of an accident involving any motor vehicle transporting any explosives, every available means shall be employed to prevent individuals, other than those employed in the protection of persons or property or in the removal of hazards or wreckage, from congregating in the vicinity; such means shall also be employed to prevent smoking, to keep flame away, and to safeguard against the aggravation of the hazard present, and to warn other users of the highway. In the event that any motor vehicle laden with or carrying dangerous explosives is entangled with another or with any other object or structure following an accident, no attempt shall be made to disentangle either vehicle or the laden vehicle from the object or structure until the lading, together with any fragments thereof, be removed to a place at least 200 feet from the vehicle (and preferably 200 feet from any habitation). In the event of fire involving a motor vehicle laden with any explosive, every practical effort shall be made to give warning of danger of explosion to habitants in the vicinity and to other users of the highway.

Emergency Signals (Stopped Vehicles)

Turn Signals

Whenever a motor vehicle is stopped upon the traveled portion of a highway or the shoulder of a highway for any cause other than necessary traffic stops, the driver of the stopped vehicle shall immediately flash the two front and two rear turn signals simultaneously as a vehicular traffic hazard warning and continue the flashing until warning devices are placed. The flashing signals shall be used during the time the warning devices are picked up for storage before moving of the vehicle. The flashing lights may be used at other times while a vehicle is stopped in addition to, but not in lieu of, the warning devices required by the following paragraphs.

Placement of Warning Devices

General Rules: Except as provided in the Special Rules of this section, whenever a vehicle is stopped upon the traveled portion of a highway or the shoulder of a highway for any cause other than necessary traffic stops, the driver shall as soon as possible, but in any event within 20 minutes, pace warning devices carried in the vehicle—either three emergency reflective triangles, three electric emergency lanterns, or three red emergency reflectors in the following manner:

(a) One at the traffic side of the stopped vehicle, within 20 feet of the front or rear of the vehicle;
(b) One at a distance of approximately 100 feet from the stopped vehicle in the center of the traffic lane or shoulder occupied by the vehicle and in a direction toward traffic approaching in that lane; and
(c) One at a distance of approximately 200 feet from the stopped vehicle in the center of the traffic lane or shoulder occupied by the vehicle and in the direction in which traffic in that lane is moving.

Special Rules:

<u>Business or residential districts</u> - The placement of warning devices is not required within the business or residential district of a municipality, except during the time lighted lamps are required and when street or highway lighting is insufficient to make a vehicle clearly discernible at a distance of 500 feet to persons on the highway.

Hills, curves, and obstructions - If a motor vehicle is stopped within 500 feet of a curve, crest of a hill, or other obstruction to view, the driver shall place the required warning signal in the direction of the obstruction to view, by a distance of 100 feet to 500 feet from the stopped vehicle so as to afford ample warning to other users of the highway.

Divided or one-way roads - If a motor vehicle is stopped upon the traveled portion or the shoulder of a divided or one-way highway, the driver shall place the required warning devices, one warning device at a distance of 200 feet and one warning device at a distance of 100 feet in a direction toward approaching traffic in the center of the lane or shoulder occupied by the vehicle. The driver shall place one warning device at the traffic side of the vehicle within 10 feet of the rear of the vehicle.

Emergency Signals

Flame-Producing - No driver shall attach or permit any person to attach a lighted fuse or other flame-producing emergency signal to any part of a motor vehicle transporting explosives.

Dangerous Cargoes - No driver shall use or permit the use of any flame-producing emergency signal for protecting any motor vehicle transporting explosives, Class 1.1, 1.2 or 1.3.

Flame-producing Devices Prohibited on Vehicles - Liquid burning emergency flares, fuses, oil lanterns, or any signal produced by a flame shall not be carried on any motor vehicle transporting explosives, Class 1.1, 1.2. 1.3.

Delivery

Deliver explosives only to authorized persons and into approved magazines or approved temporary storage or handling areas. Do not park vehicle closer than 300 feet to buildings, bridges, tunnels, personnel, etc.

Other Safety Measures

Never smoke within 100 feet of a motor vehicle transporting explosives. Do not drive, load, or unload the vehicle in a careless or reckless manner.

Unless state laws are more restrictive, two persons are permitted to ride in a vehicle transporting explosives.

TRANSPORTING EXPLOSIVES WITH PACK STOCK

Stock may carry explosives in remote areas with these restrictions:

a. Animals must be in good physical condition, well-shod, well-trained for pack use, gentle, free of bad habits, and have been worked recently.
b. Handlers shall be experienced in handling stock and be either certified or accompanied by a person certified for transporting and storing explosives.
c. Pack saddles, ropes, and other equipment must be inspected and in good condition.
d. Detonators and explosives must be packed on separate animals just before departure.
e. Detonators must be packed in original containers with voids filled and well-wrapped and padded with nonmetallic articles, such as bed rolls and tents.
f. Explosives must be packed in original cases and covered with a flame-proof and moisture-proof tarpaulin. Experienced packers must tie up bundles and rope them to pack saddles.
g. Travel one-half hour after sunrise to one-half hour before sunset.

h. Use of drugs or alcohol is prohibited.
i. In lightning or storms, lead the pack string well off the trail, unload pack animals if time permits, and move the string a safe distance away. If there is not time to unload, securely tether the pack animals carrying explosives well off the trail and move the remaining string a safe distance away.
j. Consult Tables 6-4 through 6-5 for the minimum distance a radio can be operated from the pack string. No placards are required for a pack string carrying explosives, but stenciling "EXPLOSIVES" on the mantee tarp is recommended.

TRANSPORTING EXPLOSIVES WITH TRAIL VEHICLES AND ATVs

Motorized cargo carriers and ATVs may be used on limited jobs to move explosives in remote areas. Observe these restrictions:

a. Never transport impact sensitive explosives with a two-wheel vehicle.
b. Thoroughly inspect all carriers and ATVs and correct deficiencies before use. Carriers and ATVs, including engines, must be clean and in good mechanical condition.
c. Equip all carriers and ATVs with approved spark arrester and one pressure-type dry powder or carbon dioxide fire extinguisher, rated 2-BC or better.
d. Do not exceed manufacturer's recommended load rating. In no case shall the weight of explosives exceed 200 lbs.
e. Never transport detonators in the same cargo carrier or ATV with other explosives.
f. Detonators must be packed in original containers without voids, filled and well-wrapped and padded with non metallic articles such as bed rolls and tents.
g. Use operators experienced in operating cargo carriers or ATVs. Operators must be certified to transport and store explosives or be accompanied by someone who is.
g. When loads include other equipment, tools, and supplies, limit explosives to no more than 50 pounds. When transporting such mixed cargo, pack the explosive in a metal box with a minimum 1/2-inch sponge rubber lining, hinged lid, and hasp. Fill all voids in the box. Paint the box red and stencil the word "EXPLOSIVES" on top in two-inch high white letters. Secure the box to the bottom of the cargo deck or cargo rack away from the engine.
h. Travel only between one-half hour after sunrise to one-half hour before sunset.
i. Use of drugs or alcohol is prohibited while transporting explosives.
j. Park the cargo carrier or ATV off the trail during lightning or storms; move all personnel a safe distance away.
k. Consult tables 6-1 through 6-5 for the minimum distance a radio can be operated from a cargo carrier with explosives.
l. No placards are required for ATVs carrying explosives, but stenciling "EXPLOSIVES" on the mantee tarp is recommended or post explosives placards scaled to the space available on the carrier or ATV.

TRANSPORTING EXPLOSIVES BY VESSEL

Shipment of explosives and other dangerous articles aboard vessels (including lighters and barges) by commercial service shall conform to the regulations prescribed by the Department of Transportation and Code

of Federal Regulations (CFR) Title 49 Part 176 and CFR 46 and Bureau of Explosives Tariff 6000 series.

On any boat:

1. Explosives must be placed upon a wooden platform.

2. All blasting caps and detonators must be carried on deck as far forward as possible, in their original cartons, in a watertight, wood-lined, steel, portable cap magazine. However, in smaller vessels which experience severe bow impacts in rough waters, the detonator magazine should be carried abaft midship.

3. If small boats are involved, carry the explosives on one, the caps on the other. Or if transporting the explosives to a destination where they will be unloaded such as a barge, make one trip with the explosives, and a second trip carrying the caps.

4. Situate explosives away from loading booms or hoists, where they will not be exposed to falling objects. Keep them isolated from potential sources of static electricity, heat, and radio frequency energy.

5. A boat carrying explosives must fly the "Bravo" flag at the bow, however, since this is not likely to be understood by many boaters, "EXPLOSIVES" signs should also be used in congested waters.

TRANSPORTING EXPLOSIVES BY AIRCRAFT

Caution: The following information applies only to field operations such as fire operations or projects, avalanche control, or special projects approved by the National Park Service. It does not apply to commercial aircraft operation, e.g.; any commercial airline under charter transporting fire personnel. For these types of operations, all the requirements of 49 CFR part 175 must be complied with. Refer to the OAS regulations for Department of the Interior aircraft operations (351 DM 1-3, 8).

Explosive materials can be transported by aircraft when the following conditions are met:

a. All explosives must be prepared and packaged under the supervision of a certified blaster and transported in undamaged original shipping containers. A shipper's declaration for dangerous goods must be completed (Figure 4-10).

b. High explosives must not be transported in the same container as detonators and must be separated from detonating materials. Detonating materials and explosives will be carried on different flights whenever possible and practical.

c. For separation purposes, exploding bridgewire detonators (EBWs) may be carried inside aircraft while explosive materials are transported by internal or external load, provided the detonators are contained in the original manufacturers package or packaged in an IME container.

d. Explosives that will react with oil, flames, acids, storage batteries, oxidizing or corrosive compounds will not be transported on the same flight with the reacting materials unless separation of the materials can be achieved to prevent possibility of contact between such materials.

e. Explosives and detonators transported in the aircraft or on external cargo racks must be stowed separately, secured by tiedown straps, and be accessible for jettisoning whenever possible and practical. Detonators, or impact-sensitive explosives such as dynamites, shall not be carried in helicopter sling-loads.

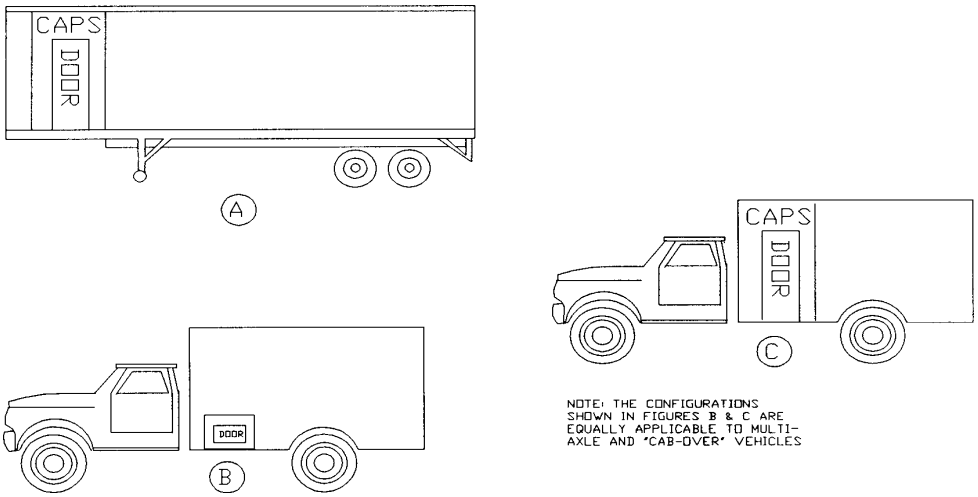

(Figure 4-11) Examples of other IME containers.

f. No passengers other than those absolutely necessary for the completion of the mission involving the transport or use of explosives will be allowed on a flight transporting explosive materials.
g. All explosives, ammunition, and detonating materials must be transported under the control or direction of a qualified or certified person.
h. Flights transporting high explosives or detonating materials, will not be conducted over densely populated areas or in congested airways. During the approach and landing phase, the aircraft

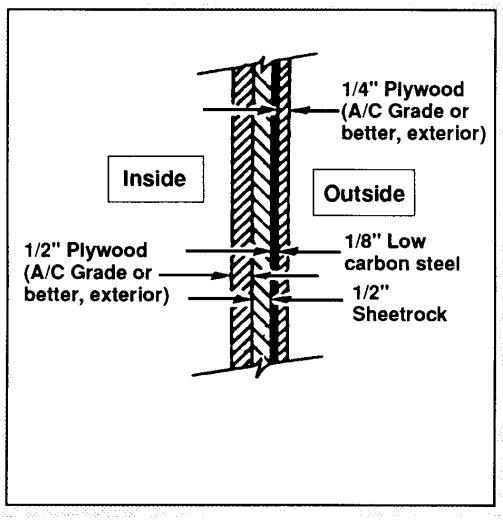

(Figure 4-12) IME container construction.

operator shall request appropriate vectors when under radar control to avoid heavily populated areas. Wherever Class A or B explosives are transported and a danger exists to people on the surface, advance permission from the owner or operator of any manned airport used must be obtained (See Figure 4-11).

i. Thermite grenades will remain in the original outside shipping containers while in transit. Any unused thermite that has been removed from its inside sealed canister will be returned to the inside canister, repacked and closed in the original outside shipping container prior to loading aboard the aircraft.
j. No aerial dispensing of an explosive device will be conducted unless the dispensing method and/or dispensing device has been approved and accepted by the NPS. See part (n).
k. The pilot shall assure that no smoking, or the use of any open flame or spark-producing device, will be allowed while transporting explosives, ammunition, or initiating devices.
l. All packages containing explosives must be labeled on the outside of the package with the appropriate Hazardous Materials warning labels.
m. In fire operations, only those explosives approved for use as a fireline explosive will be loaded on aircraft. In special operations, only the less sensitive explosives will be loaded on aircraft (i.e., water gels, emulsions, two-component, det cord).
n. When dynamite and blasting caps are carried for avalanche control flights, the explosives must be handled and, at all times, be under the control of the blaster who is licensed under appropriate authority identified in writing to the FAA Civil Aviation Security Office responsible for the operator's overall aviation security program or the FAA Civil Aviation Security Office in the region where the operator is located.
o. Any aircraft carrying explosives and making a forced landing for minor repairs will not unload its cargo, but will be repaired at a safe distance in accordance with storage requirements. Any aircraft forced down for major repairs will store its explosives cargo at a safe distance in accordance with the applicable quantity-distance tables.
p. Any aircraft carrying explosives making a landing for refueling purposes will not unload its cargo, but will be refueled in accordance with the quantity-distance requirements.
q. Prior to takeoff or landing of an aircraft loaded with explosives, the pilot will, in requesting the airdrome control tower for taxiing, takeoff and/or parking instructions, notify the control tower as to the contents of the aircraft and request special consideration and priority be given the aircraft in landing, takeoff and/or parking.
r. The quantity-distance tables will be observed in parking aircraft loaded with ammunition and explosives and such aircraft will be adequately guarded.
s. Explosive placards will be displayed when an aircraft loaded with explosives is parked and during all loading and unloading operations. Appropriate fire symbols shall be placed alongside the placards at all airfields.

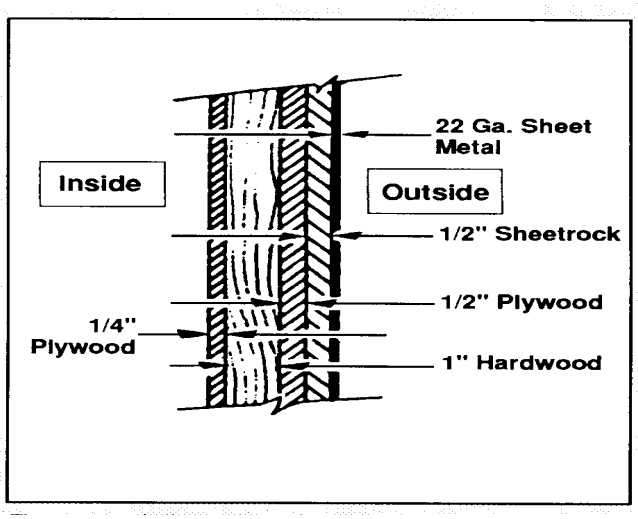

(Figure 4-13) Laminate construction.

SHIPPER'S DECLARATION FOR DANGEROUS GOODS

Shipper

Air Waybill No.

Page of Pages

Shipper's Reference Number *(optional)*

Consignee

Two completed and signed copies of this Declaration must be handed to the operator

WARNING

Failure to comply in all respects with the applicable Dangerous Goods Regulations may be in breach of the applicable law, subject to legal penalties. This Declaration must not, in any circumstances, be completed and/or signed by a consolidator, a forwarder or an IATA cargo agent.

TRANSPORT DETAILS

This shipment is within the limitations prescribed for: *(delete non-applicable)*

PASSENGER AND CARGO AIRCRAFT	CARGO AIRCRAFT ONLY

Airport of Departure

Airport of Destination:

Shipment type: *(delete non-applicable)*

NON-RADIOACTIVE	RADIOACTIVE

NATURE AND QUANTITY OF DANGEROUS GOODS

Dangerous Goods Identification				Quantity and type of packing	Packing Inst.	Authorization
Proper Shipping Name	Class or Division	UN or ID No.	Subsidiary Risk			

Additional Handling Information

I hereby declare that the contents of this consignment are fully and accurately described above by proper shipping name and are classified, packed, marked and labelled, and are in all respects in the proper condition for transport by air according to the applicable International and National Government Regulations.

Name/Title of Signatory

Place and Date

Signature *(see warning above)*

(Figure 4-14) Shipper's declaration for dangerous goods.

Operating Authority For Aircraft Carrying Explosives

Approval to operate aircraft carrying explosives must be obtained in advance from airport authorities under provisions of 49 CFR 1/5.320.

Authority to operate at _____Airport has been obtained

from_____ who is _____ by telephone restrictions

apply to operation at this airport:

Approach ad Departure Routes _____

_____

_____

Landing and Take Off _____

_____

_____

Parking/Refueling _____

_____

_____

Loading and /or Unloading _____

_____

_____

By USFS or BLM Officer

Signed _____ Title _____

Time _____ Date _____

I hereby certify that the contents of this shipment are fully and accurately described above by proper shipping name and are classified, packed, marked, and labeled, and in proper condition for carriage by air according to applicable Department of Transportation Regulations. This shipment is within the limitations prescribed for cargo only aircraft.

(Figure 4-15) Operating authority for aircraft carrying explosives.

HAZARDOUS MATERIALS LOAD AND SEGREGATION CHART

CLASS		CLASS OR DIVISION	PLACARD WEIGHT	NOTES	1.1	1.2	1.3	1.4	1.5	1.6	2.1	2.2	2.3 GAS ZONE A	2.3 GAS ZONE B	3	4.1	4.2	4.3	5.1	5.2	6.1 LIQUIDS PG I ZONE A	7	LIQUIDS 8
CLASS 1	EXPLOSIVES *Add division number and compatibility group	1.1 1.2	ANY QUANTITY	A	*	*	*	*	*		X	X	X	X	X	X	X	X	X	X	X	X	X
	EXPLOSIVES *Add division number and compatibility group	1.3	ANY QUANTITY		*	*	*	*	*		X		X	X	X		X	X	X	X	X		X
	EXPLOSIVES *Add compatibility group	1.4	1001 Lbs.		*	*	*	*	*		0		0	0	0		0				0		0
	VERY INSENSITIVE EXPLOSIVES	1.5	1001 Lbs.	A	*	*	*	*	*		X	X	X	X	X	X	X	X	X	X	X	X	X
	EXTREMELY INSENSITIVE EXPLOSIVES	1.6	1001 Lbs.		*	*	*	*	*														
CLASS 2	FLAMMABLE GASES	2.1	1001 Lbs.		X	X	0	X					X	0							0	0	
	NON-TOXIC NON-FLAMMABLE GASES	2.2	1001 Lbs.	B	X			X															
	POISONOUS GAS ZONE A (TOXIC GAS placard may be used)	2.3	ANY QUANTITY		X	X	0	X			X				X	X	X	X	X	X			X
	POISONOUS GAS ZONE B (TOXIC GAS placard may be used)	2.3	ANY QUANTITY		X	X	0	X			0				0	0	0	0	0	0			0
CLASS 3	FLAMMABLE LIQUIDS	3	1001 Lbs.		X	X	0	X					X	0					0		X		
CLASS 4	FLAMMABLE SOLIDS	4.1	1001 Lbs.		X			X					X	0							X		0
	SPONTANEOUSLY COMBUSTIBLE	4.2	1001 Lbs.		X	X	0	X					X	0							X		X
	DANGEROUS WHEN WET MATERIALS	4.3	ANY QUANTITY		X	X		X					X	0							X		0
CLASS 5	OXIDIZERS	5.1	1001 Lbs.	A	X	X		X					X	0	0						X		0
	ORGANIC PEROXIDES	5.2	1001 Lbs.		X	X		X					X	0							X		0
CLASS 6	POISONOUS LIQUIDS PG 1 ZONE A INHALATION HAZARD (TOXIC placard may be used)	6.1	ANY QUANTITY	E	X	X	0	X			0				X	X	X	X	X	X			X
CLASS 7	RADIOACTIVE MATERIALS	7	ANY QUANTITY (yellow III label)		X			X			0												
CLASS 8	CORROSIVE LIQUIDS	8	1001 Lbs.		X	X	0	X					X	0		0	X	0	0	0	X		
	COMBUSTIBLE LIQUIDS		Over 119 Gal.	C																			
CLASS 6.1	POISON PG I OR II OTHER THAN PG I INHALATION HAZARD (TOXIC placard may be used)		1001 Lbs.	C E																			
CLASS 9	MISCELLANEOUS		1001 Lbs.	C D																			

§177.848 (e) INSTRUCTIONS FOR USING THE SEGREGATION TABLE FOR HAZARDOUS MATERIALS ARE AS FOLLOWS:

(1) The absence of any hazard class or division or a blank space in the Table indicates that no restrictions apply.

(2) The letter "X" in the Table indicates that these materials may not be loaded, transported, or stored together in the same transport vehicle or storage facility during the course of transportation.

(3) The letter "O" in the Table indicates that these materials may not be loaded, transported, or stored together in the same transport vehicle or storage facility during the course of transportation unless separated in a manner that, in the event of leakage from packages under conditions normally incident to transportation, commingling of hazardous materials would not occur. Notwithstanding the methods of separation employed, Class 8 (corrosive) liquids may not be loaded above or adjacent to Class 4 (flammable) or Class 5 (oxidizing) materials; except that shippers may load truckload shipments of such materials together when it is known that the mixture of contents would not cause a fire or a dangerous evolution of heat or gas.

(4) The "*" in the Table indicates that segregation among different Class 1 (explosive) materials is governed by the compatibility table in paragraph (f) of this section.

(5) The note "A" in the third column of the Table means that, notwithstanding the requirements of the letter "X", ammonium nitrate fertilizer may be loaded or stored with Division 1.1 (Class A explosive) or Division 1.5 (blasting agents) materials.

(6) When the §172.101 Table or §172.402 of this subchapter requires a package to bear a subsidiary hazard label, segregation appropriate to the subsidiary hazard must be applied when that segregation is more restrictive than that required by the primary hazard. However, hazardous materials of the same class may be stowed together without regard to segregation required for any secondary hazard if the materials are not capable of reacting dangerously with each other and causing combustion or dangerous evolution of heat, evolution of flammable, poisonous, or asphyxiant gases, or formation of corrosive or unstable materials.

NOTES

A. See instructions §177.848(e)(5).
B. For domestic transportation of oxygen, compressed or oxygen, refrigerated liquid, the oxygen placard may be used in place of NON-FLAMMABLE GAS placard (§172.504(f)(7)).
C. No applicable segregation restrictions in §177.848(d).
D. For domestic transportation, a Class 9 placard is not required. A bulk packaging containing a Class 9 material must be marked with the appropriate identification number displayed on a Class 9 placard, an orange panel or a white-square-on-point display configuration as required by subpart D of this part (§172.504(f)(9)).
E. Packages with POISON or HARMFUL KEEP AWAY FROM FOOD labels may not be transported with foodstuffs, feed or any other edible material, intended for human or animal consumption.

PLACARDS NOT REQUIRED FOR:

1. 6.2 INFECTIOUS SUBSTANCE (Labels only)
2. RADIOACTIVE I, II (Labels only)
3. ORM-D
4. Any hazardous material identified on shipping papers as a "limited quantity."

MIXED LOADS

DANGEROUS

Placard 454 kg (1001 lbs.) gross weight of two or more categories of hazardous materials listed in Table 2. A freight container, unit load device, transport vehicle or rail car which contains non-bulk packagings with two or more categories of hazardous materials that require different placards specified in Table 2 may be placarded with DANGEROUS placards instead of the separate placarding specified for each of the materials in Table 2. However, when 2,268 kg (5000 lbs.) or more of one category of material is loaded therein at one loading facility, the placard specified in Table 2 for that category must be applied.

Division 1.1 (explosives)
Division 1.2 (explosives)
Division 1.3 (explosives)
Division 1.4 (explosives)
Division 1.5 (explosives)
Division 1.6 (explosives)
Division 2.1 (flammable gas)
Division 2.2 (non-flammable gas)
Class 3 (flammable liquid)
Combustible liquid
Division 4.1 (flammable solid)
Division 4.2 (spontaneously combustible)
Division 5.1 (oxidizer)
Division 5.2 (organic peroxide)
Division 6.1, PG I & II other than PG I INHALATION HAZARD (poison)
Division 6.1, PG III (keep away from food)
Class 8 (corrosive)
Class 9 (miscellaneous)

DANGEROUS

§172.505 PLACARDING FOR SUBSIDIARY HAZARDS

POISON — POISON GAS

(a) Each transport vehicle, freight container, portable tank or unit load device that contains a poisonous material subject to the "Poison-Inhalation Hazard" shipping description of §172.203(m)(3) must be placarded with a POISON or POISON GAS placard, as appropriate, on each side and each end, in addition to any other placard required for that material in §172.504. Duplication of the POISON or POISON GAS placard is not required.

(b) In addition to the RADIOACTIVE placard which may be required by §172.504(e) of this subpart, each transport vehicle, portable tank or freight container that contains 454 kg (1001 pounds) or more gross weight of fissile or low specific activity uranium hexafluoride shall be placarded with a CORROSIVE placard on each side and each end.

(c) Each transport vehicle, portable tank, freight container or unit load device that contains a material which has a subsidiary hazard of being dangerous when wet, as defined in §173.124 of this subchapter, shall be placarded with DANGEROUS WHEN WET placards, on each side and each end, in addition to the placards required by §172.504.

(d) Hazardous materials that possess secondary hazards may exhibit subsidiary placards that correspond to the placards described in this part, even when not required by this part (see also §172.519(b)(4) of this subpart).

Copyright 1996 & Published by J. J. KELLER & ASSOCIATES, INC., Neenah, WI 54957-0368 • USA • (800) 327-6868

41-FB

(Figure 4-16) Hazardous Materials Load and Segregation Chart, side one.

(Chart 4-16) Hazardous Materials Load and Segregation Chart, side one.

HAZARDOUS MATERIALS LOAD AND SEGREGATION CHART

COMPATIBILITY TABLE FOR CLASS 1 (EXPLOSIVE) MATERIALS

COMPATIBILITY GROUP	A	B	C	D	E	F	G	H	J	K	L	N	S
A		X	X	X	X	X	X	X	X	X	X	X	X
B	X		X	4	X	X	X	X	X	X	X	X	4/5
C	X	X		2	2	X	X	X	X	X	X	3	4/5
D	X	4	2		2	X	X	X	X	X	X	3	4/5
E	X	X	2	2		X	X	X	X	X	X	3	4/5
F	X	X	X	X	X		X	X	X	X	X	X	4/5
G	X	X	X	X	X	X		X	X	X	X	X	4/5
H	X	X	X	X	X	X	X		X	X	X	X	4/5
J	X	X	X	X	X	X	X	X		X	X	X	4/5
K	X	X	X	X	X	X	X	X	X		X	X	4/5
L	X	X	X	X	X	X	X	X	X	X	1	X	X
N	X	X	3	3	3	X	X	X	X	X	X		4/5
S	X	4/5	4/5	4/5	4/5	4/5	4/5	4/5	4/5	4/5	X	4/5	

§177.848 (g) Instructions for using the compatibility table for Class 1 (explosive) materials are as follows:

(1) A blank space in the Table indicates that no restrictions apply.

(2) The letter "X" in the Table indicates that explosives of different compatibility groups may not be carried on the same transport vehicle.

(3) The numbers in the Table mean the following:

(i) "1" means an explosive from compatibility group L shall only be carried on the same transport vehicle with an identical explosive.

(ii) "2" means any combination of explosives from compatibility groups C, D, or E is assigned to compatibility group E.

(iii) "3" means any combination of explosives from compatibility groups C, D, or E with those in compatibility group N is assigned to compatibility group D.

(iv) "4" means §177.835(g) when transporting detonators.

(v) "5" means Division 1.4S fireworks may not be loaded on the same transport vehicle with Division 1.1 or 1.2 (Class A explosive) materials.

(h) Except as provided in paragraph (i) of this section, explosives of the same compatibility group but of different divisions may be transported together provided that the whole shipment is transported as though its entire contents were of the lower numerical division (i.e., Division 1.1 being lower than Division 1.2). For example, a mixed shipment of Division 1.2 (Class A explosive) materials and Division 1.4 (Class C explosive) materials, both of compatibility group D, must be transported as Division 1.2 (Class A explosive) materials.

(i) When Division 1.5 (blasting agent) materials, compatibility group D, are transported in the same freight container as Division 1.2 (Class A explosive) materials, compatibility group D, the shipment must be transported as Division 1.1 (Class A explosive) materials, compatibility group D.

CLASS 1 EXPLOSIVE PLACARDS

DIVISIONS 1.1, 1.2 & 1.3

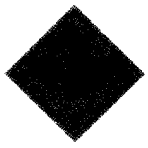

The Division number and compatibility group are printed in black ink where the * is shown. Placard any quantity of Division number 1.1, 1.2 or 1.3 material.

* Division Numbers and Compatibility Group

1.1A	1.2B	1.2L
1.1B	1.2C	1.3C
1.1C	1.2D	1.3F
1.1D	1.2E	1.3G
1.1E	1.2F	1.3H
1.1F	1.2G	1.3J
1.1G	1.2H	1.3K
1.1J	1.2J	1.3L
1.1L	1.2K	

DIVISION 1.4

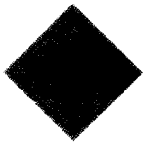

The compatibility group is printed in black ink, where the * is shown. Placard 454 kg. (1001 lbs.) or more of 1.4 Explosives.

* Compatibility Group

B
C
D
E
F
G
S

DIVISION 1.5

The compatibility group is D. Placard 454 kg. (1001 lbs.) or more of 1.5 Blasting Agents.

DIVISION 1.6

The compatibility group is N. Placard 454 kg. (1001 lbs.) or more of 1.6 Explosives.

HAZARDOUS MATERIALS SHIPPING PAPERS

TO: Consignee / Street / Destination / Zip / Route	FROM: Shipper / Street / Origin / Zip / Vehicle Number / U.S. DOT Hazmat Reg. No.

No. Shipping Units	HM	Kind of Packages, Description of Articles (IF HAZARDOUS MATERIALS - PROPER SHIPPING NAME)	HAZARD CLASS	I.D. Number	Packing Group	WEIGHT (subject to correction)	RATE	LABELS REQUIRED (or exemption)

Generally, whenever a hazardous material is transported its description must appear on the shipping paper.

The description must adhere to these requirements:

1. If a hazardous material and a non-hazardous material are described on the same shipping paper, the hazardous material must be:
   a. listed first
   b. shown in a contrasting color (highlighted on a reproduction)
   c. identified with an "X" or "RQ" before the proper shipping name in the column marked "HM".
2. Entry must be legible and printed in English.
3. Unless specifically authorized or required, the description may not contain codes or abbreviations.
4. Additional information must follow the basic description.
5. If more than one page is required, the first page must indicate such, for example, 'page 1 of 4.'
6. Shipping paper must show an emergency response telephone number, if required.
7. Shipping paper must contain shipper's certification, if required.

A shipping description must include:

1. proper shipping name (column 2, Hazardous Materials Table)
2. hazard class or division (column 3, Hazardous Materials Table)
3. identification number (column 4, Hazardous Materials Table)
4. packing group (column 5, Hazardous Materials Table)
5. except for empty packagings, the total quantity, including unit for measurement, of the hazardous material.

§172.505 PLACARDING FOR SUBSIDIARY HAZARDS

(a) Each transport vehicle, freight container, portable tank, unit load device, or rail car that contains a poisonous material subject to the "Poison-Inhalation Hazard" shipping description of §172.203(m)(3) must be placarded with a POISON INHALATION HAZARD or POISON GAS placard, as appropriate, on each side and each end, in addition to any other placard required for that material in §172.504. Duplication of the POISON INHALATION HAZARD or POISON GAS placard is not required.

(b) In addition to the RADIOACTIVE placard which may be required by §172.504(e) of this subpart, each transport vehicle, portable tank or freight container that contains 454 kg (1001 pounds) or more gross weight of fissile or low specific activity uranium hexafluoride shall be placarded with a CORROSIVE placard on each side and each end.

(c) Each transport vehicle, portable tank, freight container or unit load device that contains a material which has a subsidiary hazard of being dangerous when wet, as defined in §173.124 of this subchapter, shall be placarded with DANGEROUS WHEN WET placards, on each side and each end, in addition to the placards required by §172.504.

(d) Hazardous materials that possess secondary hazards may exhibit subsidiary placards that correspond to the placards described in this part, even when not required by this part (see also §172.519(b)(4) of this subpart).

© Copyright 1997 J. J. KELLER & ASSOCIATES, INC., Neenah, WI • USA • (800) 327-6868 • Printed in the United States

41-FB Backer (Rev. 3/97)

(Figure 4-17)

Chapter 5
BLAST AREA SECURITY

AREA SECURITY

The blaster-in-charge is responsible for posting flaggers or guards and warning signs, notifying all persons in the blast area, and giving all necessary audible warning signals. The purpose of these measures is to preclude the entry of persons into the hazard zone of the blast (defined as the area within the possible flyrock perimeter) between blast loading and post-blast "All Clear."

Effective security can only be obtained by the use of guards; signs and signals can warn people, but cannot *control* them. Guards must be posted on all routes of possible access to the hazard zone, and must be stationed beyond the probable reach of flyrock. They must be able to communicate with the blaster-in-charge so that the blast can be prevented if someone gets past them (see Signal Systems). Most importantly, guards must know what to expect from the blast. The most common failing in blast area security is not having enough guards; the second most common failing is lack of instruction to the blast area guards.

It is critical for guards to know the blasting sequence (timing, signals) and what the blast is supposed to do (a deep thump, a loud roar, or an ear-splitting bang with a lot of flyrock, etc.). They must know what procedures will apply in case of incident or accident (misfire, hangfire, approaching lightning, premature detonation). Guards must also know what to tell people whom they stop. Flaggers and guards need to be told they have the authority *and responsibility* to physically stop people from entering the hazard zone if it becomes necessary. All of this information must come from the blaster-in-charge. A guard is a member of the blasting team and it is his or her responsibility to make sure he or she can perform as such.

SIGNING

All signing must conform to the Manual of Uniform Traffic Control Devices (MUTCD) for streets and highways whenever blasting operations are conducted on any road. The "BLASTING ZONE 1000 FT" sign is intended for use in advance of any point or work site where there are explosives being used (Figure 5-1). The "TURN OFF 2-WAY RADIO" sign and "END BLASTING ZONE" sign must be used in sequence with this sign (Figure 5-2). Provisions shall be made for covering or removing the sign sequence when there are no explosives in the area or the area is otherwise secured.

Along trails or in other roadless-area blasting, the signs used need not exactly match MUTCD details and may be tailored in size, text, and placement to best serve a particular situation. However, they must still meet the intent of the MUTCD standard, which is to prevent accidents by properly warning and informing persons approaching the blasting area, at a distance adequate to their safety and the safety of the blasting crew.

SIGNAL SYSTEMS

Throughout a blast sequence, the blaster-in-charge and others in the blast area (most particularly the guards) communicate by means of signal systems. Signal systems may range from hand signals and/or shouts, using horns or whistles, to direct radio communication. OSHA mandates that regardless of other means used, there must be an audible warning system as part of the signal system. No matter what methods are used, the signal system must always meet the following minimum standards:

a. It must be simple and understood by everyone in the vicinity. If sign text states a signal sequence, then the system used must match the message in the sign.
b. Warnings of the impending blast, "Blasting" must be provided at least twice: five minutes before detonation, and one minute before detonation. It is recommended that three warning signals be used: one at the time of pre-blast inspection, one at the time of blasting machine hookup (at least one minute before detonation), and another 10 seconds before detonation. These signals must be different enough to be individually identifiable by the guards.
c. The system must include an "All Clear" signal, given after the post-blast inspection and distinctly different from the warning signals.
d. The signal system must be a "positive-response" system where the guards can effectively communicate to the blaster-in-charge any need to halt the blast prior to instant of detonation, and the blaster-in-charge can effectively acknowledge that communication.
e. The signals must be readily identifiable by the guards, with no risk of confusion about each signal's meaning. For this reason, the use of radio communication is strongly encouraged, while the use of hand signals or voice-only signals (yelling) are strongly discouraged.

For example:
General Blasting Procedures
Brief and setup guards:
Positive response system
Layout lead wire; continuity test
"BLASTING ONE" Guards respond
Test Cap (optional)
Hookup cap to lead wire
Cap to det cord
Inspect setup
"BLASTING TWO" Guards respond
Return to initiation site
Check continuity of circuit
Lead wire to blasting machine
"BLASTING NOW" Guards respond
Initiate shot, "BOOM"
(if misfire, follow misfire procedures)
Disconnect and shunt lead wire
Inspect blasting site
"ALL CLEAR" Guards respond

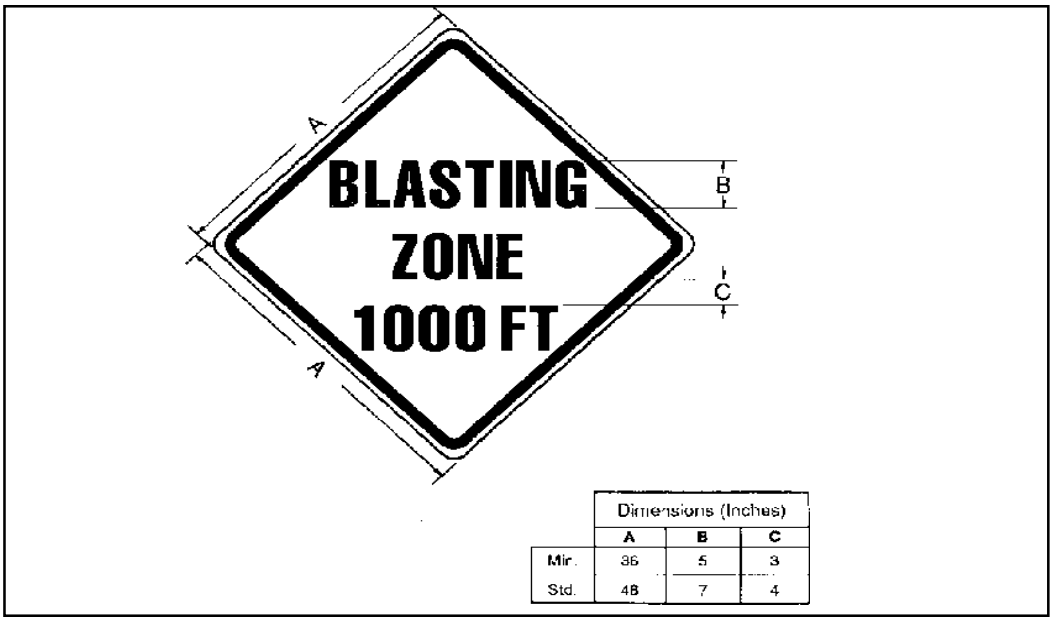

	Dimensions (Inches)		
	A	B	C
Min.	36	5	3
Std.	48	7	4

(Figure 5-1) Blasting zone sign.

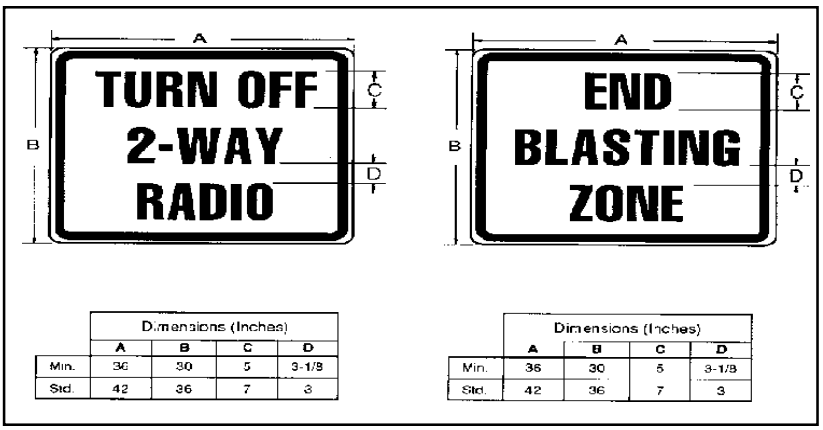

	Dimensions (Inches)			
	A	B	C	D
Min.	36	30	5	3-1/8
Std.	42	36	7	3

	Dimensions (Inches)			
	A	B	C	D
Min.	36	30	5	3-1/8
Std.	42	36	7	3

(Figure 5-2) Blasting zone signs.

AREA INSPECTIONS

A critical element in area security is the performance of the blast itself: Does it do what it was designed to do and in the manner anticipated? A smooth area security operation can suddenly become immensely complicated by a misfire or by fly-rock descending like giant hail in a place it was not supposed to reach. In order to help prevent this, the blaster-in-charge, alone and before anyone else enters the area, must inspect the blast site for any evidence of misfire, hangfire, or other hazardous conditions. Only after this inspection is made, and the blaster-in-charge gives the "All Clear" signal, can the area security system be relaxed. If any indication of misfire or hangfire is found, the area security system must remain in full effect until the risk of any unplanned detonation is eliminated by the blaster-in-charge.

Chapter 6
INITIATION

COMPONENTS USED IN ELECTRIC BLASTING

The electric power source used to initiate a blast may be a twist or push type generator blasting machine and a remote radio device, a condenser discharge machine, or an AC power line through a blasting switch. Never use batteries directly; only a blasting machine or blasting switch provides the current and time control necessary to prevent cap arcing and misfires.

The generator type blasting machine converts the mechanical energy of the blaster's hand motion into electrical energy and then closes the contacts to the firing circuit when the peak electric energy is generated. A condenser discharge machine uses dry-cell batteries to charge a set of capacitors. When the fire button is pushed, the stored electrical energy in these capacitors is discharged into the firing circuit. The remote detonation system can be activated and controlled with the commonly used King™ radio that has been retrofitted with a dual tone modulated frequency chip (DTMF). The entire remote detonation system allows the blaster-in-charge more flexibility in selecting a location to initiate the blast.

No alterations or repairs of an electric blasting machine should be attempted, unless by the manufacturer. Ordinary maintenance by the blaster should be limited to changing the batteries in the condenser discharge type machines and to lubricating the moving parts in the generator type.

The LEAD WIRE, or the FIRING LINE as it is sometimes called, connects the power source to the blasting circuit. It should be a two-conductor, insulated, solid copper wire (with exception of the multiconductor cable for a sequential blasting machine) and be at least 14-gauge thickness. The length will vary according to the size of the shot, but it should not be less than 500 feet. CONNECTING WIRE is made the same way as lead wire, but it is only 20-gauge, and is used for short distances between the lead wire and the cap leg wires to prevent the loss (shortening) of the lead wire from blast damage.

The LEG WIRES are the wires attached to the cap. Normally these wires are made of copper, iron or aluminum and are always covered with a plastic insulation. The leg wires come in assorted lengths and are color coded. Caps coming from the manufacturer are short circuited by a piece of foil connecting the ends of both leg wires. This foil is called a SHUNT and it affords some protection against the cap accidentally being fired by a stray current. The shunt should not be removed from the leg wires until the cap is wired into the blasting circuit.

An essential piece of testing equipment for electric blasting is either the BLASTING GALVANOMETER

or the BLASTING OHMMETER. These instruments are specially designed for testing blasting cap circuits. They contain limiting resistors which prevent the machine battery from initiating a blasting cap. Use of any other instrument (unless designed for blasting use such as a blaster's multimeter), not specifically designed for blasting circuits, will likely cause electric blasting caps to fire. The purpose of this instrument is to allow the blaster to check the connections and condition of the caps, wires, connections and completeness of the circuit.

The blasting galvanometer has an indicator needle which measures resistance of the circuit to which it is attached. The greater the resistance being measured, the less distance the needle will travel full scale. Blasting ohmmeters, which are more accurate than galvanometers, have different scales and are read somewhat differently; follow the manufacturer's instructions.

The galvanometer should be tested before each use. This can be done by placing a single piece of wire across the two external terminals to short circuit them. Doing this should cause the needle to deflect to the maximum. If it does not, the battery usually needs to be replaced. Replace them with a battery exactly like the one that the manufacturer recommends, or one that is approved by the regulating agency. If the needle does not deflect properly, the instrument is faulty. Do not attempt to repair the galvanometer. In doing so, you may create a power source rather than a test instrument.

In testing a circuit, the blasting galvanometer is not sufficiently sensitive to determine whether each individual blasting cap has been connected into the circuit. However, the instrument will give the blaster an indication that the circuit is not shorted, open, or if there are any bad connections. A short in the circuit will cause the resistance measured to be less than expected. A loose or dirty connection will cause an excessively high resistance. If the needle does not move at all when testing the circuit, this indicates a break in the circuit. If more precise readings are needed, then the use of a BLASTER'S OHMMETER or a BLASTER'S MULTIMETER is recommended.

Factors Basic to Ohms Law

$$I = \frac{V}{R}$$

V = Voltage expressed in volts
I = Current expressed in amperes
R = Resistance expressed in ohms

Example: Blasting circuit resistance is equal to 24 ohms and voltage is 120 volts, the electric current will be 5 amperes:

$$I = \frac{V}{R} = \frac{120 \text{ volts}}{24 \text{ ohms}} = 5 \text{ amperes}$$

If the current (amperes) is high enough, all the caps will fire. If the current is too low, some or all of the caps might not fire.

Blasting Caps are designed to have a minimum firing current of 0.25 amps.

ELECTRIC BLASTING CAPS

The blaster-in-charge must conduct a thorough survey for stray currents and eliminate any dangerous currents before adopting any system of electric firing with electric blasting caps and before loading any holes.

a. Keep shunt on detonators until ready to connect them in series.
b. Use only detonators of the same manufacture in the same circuit.
c. Use only delays or instant detonators in a series. Do not mix. Make up primers in accordance with

methods outlined in the *Institute of Makers of Explosives Publication No. 17*, "Safety in the Transportation, Storage, Handling, and Use of Explosives."

ELECTRIC BLASTING CIRCUITS

Commonly used electric blasting circuits are SERIES and SERIES-PARALLEL. Straight PARALLEL circuits are used in mines where firing is done by AC current through a blasting switch.

A SERIES circuit provides a single path for the current to flow through, containing all caps in the circuit. Holes or charges are commonly connected in series by connecting a leg wire of the cap in the first charge to one leg wire from the second charge, then to the third charge and so on. After all caps have been connected in this manner, only two leg wires will be left (one leg wire from the first cap, and one leg wire from the last cap). These two wires are then connected to the firing line and back to the power source. Electric blasting caps have color coded leg wires to help the blaster avoid confusion and to allow a visual check that all caps are connected.

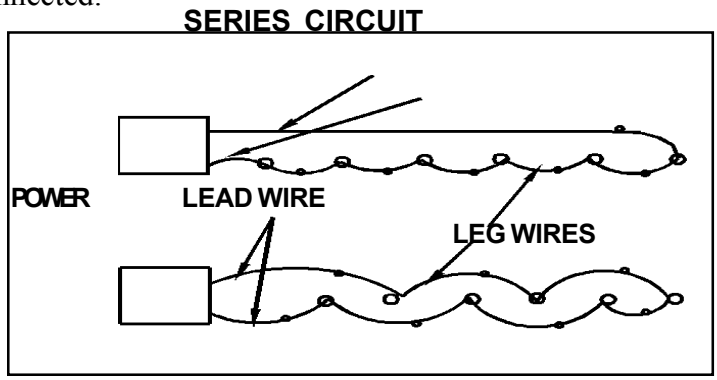

(Figure 6-1) Diagram of series circuit

In cases where the distance between the caps is greater than can be spanned by the leg wires, connecting wire or detonating cord may be used to join the caps. The blaster can also use caps with longer leg wires which is the best solution. When connecting wire is used, there are more splices, which increases the resistance of the circuit and can cause unbalanced loads between caps. The increased number of splices also increases the possibility of error, takes more time, and costs more. The advantages of a single series circuit are:

1. All caps in the series receive the same current.
2. It is simple, both electrically and physically, so it is easy to lay out and difficult to make mistakes in wiring.
3. It is very easy to check a simple series with a blasting galvanometer.

The primary disadvantage to a series is that the number of caps is limited by the cumulative nature of each cap's electrical resistance in this kind of circuit.

A SERIES-PARALLEL circuit is one in which two or more series circuits are wired onto the same firing line in a parallel configuration (see Figure 6-2). It has the advantage of allowing a much larger number of caps in an electrical initiation design. This results from the way electricity overcomes resistance. Simply stated, the resistance of the cap circuit in a series circuit is the resistance of one cap multiplied by the number of caps in the circuit. In comparison, the resistance of the cap circuit in a series-parallel circuit

is the resistance of one series circuit divided by the number of series in the total circuit.

For example:

Series with 10 1.5-ohm caps -
10 x 1.5 = 15 ohms circuit resistance.

Series-parallel, 2 series of 10 1.5-ohm caps each -
10 x 1.5 = 15 ohms divided by 2
= 7.5 ohms circuit resistance.

The disadvantage, however, to series-parallel circuits is twofold: The individual series must be balanced within 10 percent (three caps cannot be included in one series and seven caps in another), *and* the blasting machine used must be rated to handle the current requirement, which is higher than for series circuits. The recommendation of the machine manufacturer must be followed. Do not use series-parallel circuits unless you are absolutely certain of what you are doing.

PARALLEL circuits, due to their complexity (multiple interdependent resistance calculations per cap) and high power requirements, are not used outside of major mine and tunnel operations, and are not further discussed in this publication.

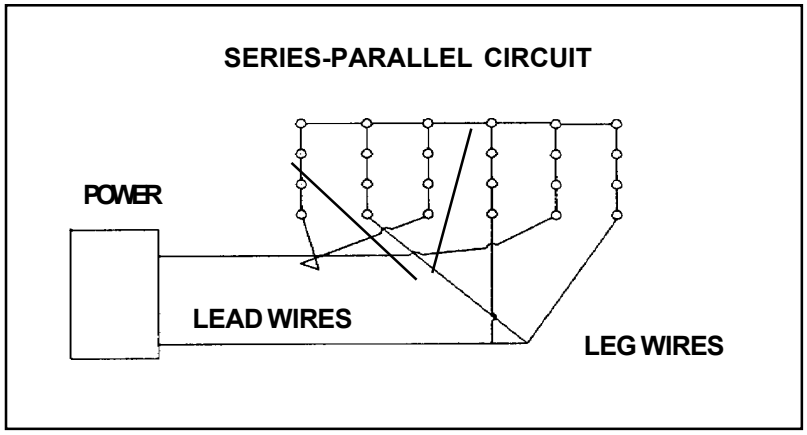

(Figure 6-2) Series-parallel circuit.

SPLICING

Obviously, it is very important that all splices and connections are made carefully. A faulty connection may interrupt the current flow and cause a misfire. As mentioned before, splices add to the total resistance. Poor splices also reduce the tensile strength of the circuit's wires causing them to pull apart under strains the blaster must expect when loading and wiring up.

Before connecting any wires, the insulation must be removed carefully so as not to nick or cut the wire. The wire should be clean of any coating, dirt, or corrosion.

After splices and connections have been made, care must be taken so they do not short by contacting each other, ground or water. Bare wires and splices should be kept off the ground, using blocks of wood or nonconducting material. Uninsulated wire should not be in contact with the ground at any time.

The most frequent wire connection in blasting is joining the leg wires of the blasting caps in a circuit. The most common method of doing this is:

1. Hold the two bared wires together, side by side, with both ends pointing in the same direction.

2. Bend both together at the middle of the bared portion, folding in a way to form a loop.

3. Then twist this loop several times.

This forms a strong and a low resistance connection. This connection takes only a few seconds and tends to become tighter if pulled.

There are many other connections used in the field today. Any connection will work as long as it has strength and contact to provide low resistance.

The blaster-in-charge has the responsibility for wiring the circuit and making all splices and connections. This will keep the wiring consistent and will keep unnecessary traffic from the shot area so as not to trip over and break connections.

PRIMERS

A primer is the explosive unit (cartridge, cast primer) which contains a detonator (blasting cap, detonating cord).

General

NEVER prepare more primers than immediately needed.

NEVER prepare primers in a magazine or near large quantities of explosive materials.

NEVER slit, drop, twist, or tamp a primer.

NEVER use a cast primer or booster if the hole for the detonator is too small.

NEVER enlarge a hole in a cast primer or booster to accept a detonator.

NEVER punch explosive material that is very hard or frozen.

NEVER force a detonator into explosive material.

Making Primers With Electric Detonators

Small Diameter Cartridges (less than 4 inches in diameter) (Figure 6-4):
Step 1. Punch a hole straight into one end of cartridge.
Step 2. Insert the detonator into the hole.
Step 3. Tie leg wires around the cartridge using a half-hitch.
NEVER pull the wires too tightly. This may break them or damage the insulation.

Large Diameter Cartridges (4 inches and larger in diameter) (Figure 6-4):
Step 1. Punch a slanting hole from the center of one end of the cartridge coming out through the side two or

more inches from the end.

Step 2. Fold over the leg wires about 12 inches from the detonator to form a sharp bend.

Step 3. Push the folded wires through the hole starting at the end of the cartridge and coming out through the side.

Step 4. Open the folded wires and pass the loop over the other end of the cartridge.

Step 5. Punch another hole straight into the end of the cartridge beside the first, insert the detonator in this hole, and take up all the slack in the wires.

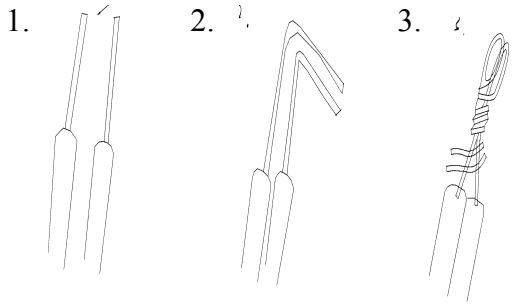

(Figure 6-3) Bare leg wires.

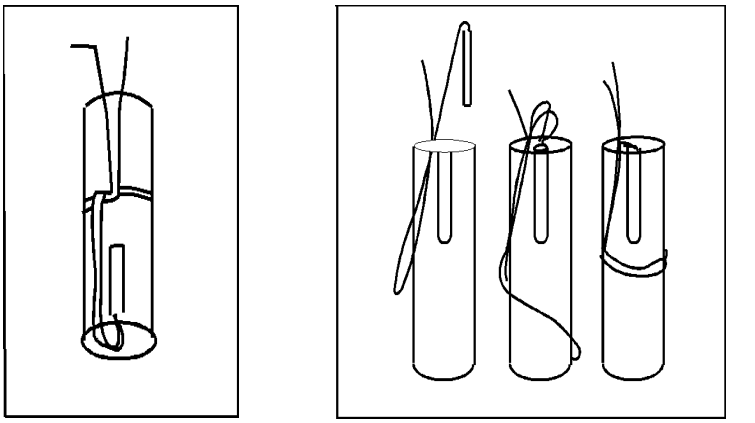

(Figure 6-4) Cartridge Diameter

EXPLODING BRIDGEWIRE DETONATORS (EBWS)

Exploding bridgewire detonators (EBWs) are not subject to detonation by static electricity, stray currents, radio transmitters, etc., and may be safely used where these conditions are present.

Exploding bridgewire detonators and firing sets are manufactured by Reynolds Industries and are approved for NPS use. RP-80, RP501, and RP-83 detonators may be used with detonating cord, or bulk explosives, or cartridges of cap sensitive explosives. RP-80 detonators with cord adapters are used only with detonating cord. RP80 and RP501 detonators are directional, whereas the RP 83 detonators are not.

Use Reynolds FS-9 or FS-10 firing sets in accordance with the manufacturer's instruction.

Consult Reynolds Industries before firing more than two EBWs in series.

Provide enough lead wire to permit the blaster and crew to be at least 500 airline feet from the nearest explosive. Always follow the manufacturer's recommendations for wire gauge and type.

DETONATING CORD

Select a detonating cord consistent with the size and physical condition of the borehole, stemming, and the type of explosive.

Typically, 50-grain down line is used in boreholes. Twenty-five grain down line also works since it is easier to tie and less expensive.

Handle and use detonating cord with the same respect and care given other explosives.

Cut the line of detonating cord extending from a borehole or from a charge from the supply spool before loading the remainder of the borehole or placing additional charges.

Handle and use detonating cord with care to avoid damaging or severing the cord during and after loading and hooking up.

Make sure detonating cord connections are complete and positive in accordance with manufacturer's recommendations.

Make knot-type or other cord-to-cord connections only if the explosives core is dry (See Figure 6-5).

Keep all detonating cord trunklines and branchlines free of loops, kinks, or sharp angles that direct the cord back toward the oncoming line of detonation. Be sure to weight the cord.

Inspect all detonating cord connections before firing the blast.

When using detonating cord millisecond-delay connectors or short-interval-delay electric blasting caps with detonating cord, strictly follow manufacturers recommendation when connecting a detonator to detonating cord, tape or otherwise attach the cap securely along the side or end of a three-foot length of detonating cord. The end of the detonator containing the explosive charge must be pointed in the direction in which the detonation is to proceed. Tie the "pigtail" to the main line just before returning to the blasting machine.

Do not bring detonators for firing the trunkline to the loading area or attach them to the detonating cord until everything else is in readiness for the blast.

When detonating cord is used, a double line of cord with frequent crossties should be used throughout, so that the detonation wave can reach the explosive charges from more than one direction. (See Figure 6-6).

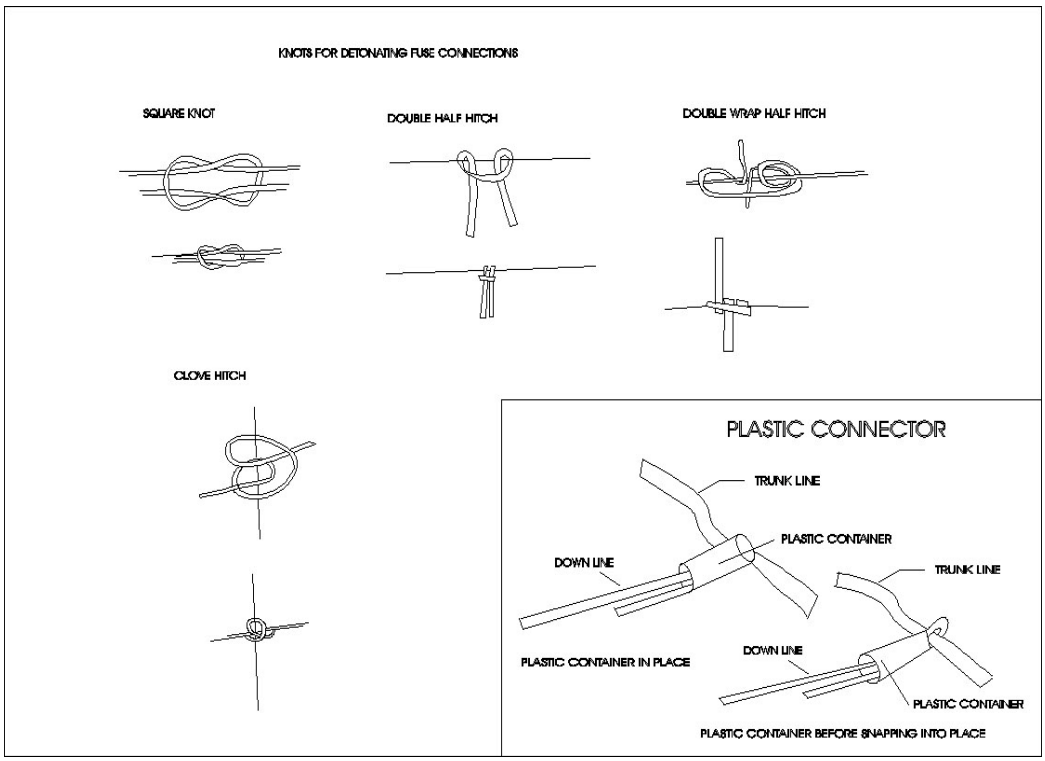

(Figure 6-5) Detonating cord connections.

Drilling

Do not start drilling until all remaining butts or old holes are examined for unexploded charges. If any are found, refire them before work proceeds. Never deepen drill holes that have contained explosives or blasting agents.

Make boreholes large enough to admit the explosives cartridges freely. Check holes before loading to determine depth and conditions. Do not drill within 50 feet of a hole loaded with explosives.

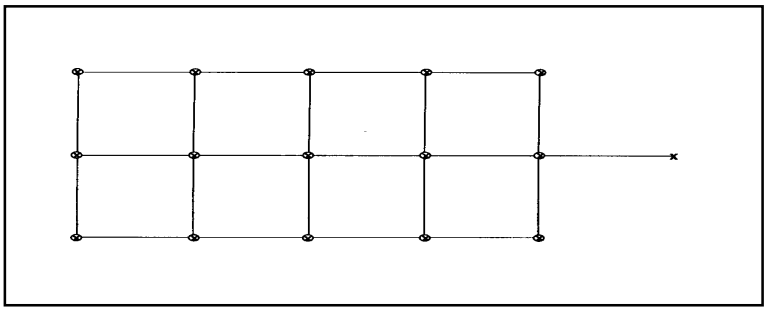

(Figure 6-6) Double-trunking.

LOADING

Establish procedures that permit safe and efficient loading before loading is started. Do not load any holes, except those to be fired in the next round of blasting. After loading, immediately remove all remaining explosives and detonators from the blast area.

Tamp only with blunt wood rods or plastic tamping poles without exposed metal parts. Non-sparking metal connectors may be used for jointed poles. Avoid violent tamping. Never tamp the primer. Tamp the last half of stemming material firmly in place. Take care not to damage detonator wires or detonating cord.

In blasting operations, no drill holes shall be sprung or chambered.

Never leave loaded holes unattended or unprotected. Blasters must schedule work to ensure loaded holes or charges will be shot before they leave the site.

Never leave explosives or blasting agents unattended at the blast site.

Only tools used for loading explosives into holes should be nearby when explosives are delivered. Keep machines and other
equipment out of the area. Do not operate equipment within 50 feet of loaded holes.

The only activity permitted in a blast area is that required for loading holes with explosives.

If more than one blaster has been loading holes in the same area, the blaster-in-charge will check the wiring to ensure that all charges are properly connected in the circuit.

WIRING

Wire all caps in series. Do not wire more caps in a series than the rated capacity of the blasting machine.

For multiple shots, use standard 14-gauge or larger solid copper wire with no bare joints. Tape splices and support them off the ground. When using 20-gauge firing line, on other than EBW systems, get regional blasting officer approval.

Provide sufficient lead wire to permit the blaster and crew to be a minimum of 500 airline feet away from the nearest explosive charge.

Prevent lead wires and detonator wires from contacting any part of a telephone line, transmission line, or other electric installation.

After lead wires have been wired into the circuit with all connections tight and the wire clean, and before attaching lead wires to the blasting machine, check the circuit with an approved galvanometer or an

approved blaster's ohmmeter to see if it is closed.

FIRING

The blaster-in-charge must be assured that everyone is in a safe location. The blaster-in-charge is the last person to leave the blast area.

Use only approved capacitor discharge or generator blasting machines.

The blaster-in-charge of the shot shall connect the lead wires to the blasting machine.

Where practical, keep the blasting machine in a moisture-proof, locked box, and remove only when used.

Be sure safety switches are in the same position before connecting lead wires.

The blaster-in-charge is responsible for the blasting machine when it is not in use on the project.

Firing Procedures

a. Personnel must not be in front of the shot; they should be off to one side at least 500 airline feet from the nearest explosives. Vehicle and pedestrian traffic approaching the blasting area by road or trail must be stopped at least 700 airline feet from the blasting area when the first "fire" is given, and held until the area is cleared by the blaster-in-charge.

b. The blaster-in-charge must shout "fire" three times before each shot, and sufficiently in advance to permit all persons to reach a point of safety. Refer to the complete firing sequence in Chapter 5 - Blast Area Security.

c. Where noises make shouts inaudible, use bullhorns, whistles, or low-wattage radios. If radios are used when blasting with electric caps, observe the minimum distances shown in Tables 6-1 through 6-5. These limits on radio use do not apply when using EBWs or Nonel.

d. All personnel must face the blast, with backs to the sun if possible, to provide the best chance to watch for and avoid flying debris. The must also be in the safest direction from the blast to avoid fumes.

e. Immediately after the blast, the blaster-in-charge disconnects the lead wires from the machine, twists the bare ends together, and secures the machine so it cannot be activated.

Transmitter Power (1) (Watts)	*Minimum Distance Feet)*
Up to 4,000	750
5,000	850
10,000	1,200
25,000	2,000
50,000(2)	2,800
100,000	3,900
500,000	8,800

(1) Power delivered to antenna.
(2) 50,000 watts is the present maximum power of U.S. broadcast transmitters in this frequency range.

(Figure 6-7) Recommended distances for commercial AM Broadcast transmitters 0.535 to 1.605 MHz.

Effective Radiated Power (Watts)	Minimum Distance (Feet)
Up to 10,000	600
1,000,000	2,000
5,000,000 (1)	3,000
100,000,000	6,000

(1) Present maximum power channels 14 to 83 – 5,000 000 watts.

From Institute of Makers of Explosives, Publication 20, Safety Guide for the Prevention of Radio Frequency Radiation Hazards in the Use of Electric Blasting Caps (March 1971)

(Figure 6-8) Recommended distances from UHF TV transmitters.

Transmitter Power (1) (Watts)	Minimum Distance Feet)
100	750
500	1,700
1,000	2,400
5,000	5,500
50,000	17,000
500,000(4)	55,000

(1) Based on the configuration shown in Fig. 2b using 20.8 MHz which is the most sensitive frequency.
2) This table should be applied to International Broadcast Transmitters in the 10-25 MHz range.
(3) Power delivered to antenna.
(4) Present maximum for International Broadcast.

(Figure 6-9) Recommended distances for transmitters up to 30 MHz (excluding AM broadcast). Calculated for a specific loop pickup configuration.

Transmitter[1] Power (Watts)	MF 1.6 to 3.4 MHz Industrial	HF 28 to 29.7 MHz Amateur	VHF 35 to 36 MHz Public Use 42 to 44 MHz Public Use 50 to 54 MHz Amateur	VRF 144 to 148 MHz Amateur 150.8 to 161.6 MHz Public Use	UHF 450 to 470 MHz Public Use
10	40	100	40	15	10
50	90	220	90	3s	20
100	125	310	130	50	30
180[2]	-	-	-	65	40
250	200	490	205	75	45
500[3]	-	-	290	-	-
600[4]	300	760	315	115	70
1,000[5]	400	980	410	150	90
10,000[6]	1 250	-	1,300	-	-

Citizens 8and (Walk e-Talkie) 5 watts Minimum Distance 5 ft–26 96 to 27 23 MHz

(1) Power delivered to antenna.
(2) Maximum power for two-way mobile units in VHF (150.8 to 161.6 MHz range) and for two-way mobile and fixed station units in UHF (450 to 460 MHz range).
(3) Maximum power for major VHF two-way mobile and fixed station units in 35 to 44 MHz range.
(4) Maximum power for two-way fixed station units in VHF (150.8 to 161.6 MHz range).
(5) Maximum power for amateur radio mobile units.
(6) Maximum power for some base stations in 42 to 44 MHz band and 1.6 to 1.8 MHz band.

(Figure 6-10) Recommended distances of mobile transmitters including amateur and citizens' band minimum distance (feet).

Effective Radiated Power (Watts)	Minimum Distance (Feet) Channtels 2 to 6 and FM	Channels 7 t0 13
Up to 1,000	1,000	750
10,000	1,800	1,300
100,000 [1]	3,200	2,300
316,000 [2]	4,300	3,000
1,000,000	5,800	4,000
10,000,000	10,2000	7,400

(1) Present maximum power channels 2 to 6 and FM 100,000 watts.
(2) Present maximum power channels 7 to 13–316,000 watts.

(Figure 6-11) Recommended distances for VHF TV and FM broadcasting transmitters.

Static Electricity

Take precautions to prevent accidental firing of electric blasting caps from current induced by radar, radio transmitters, lightning, adjacent power lines, dust storms, clothing, portable electric cables for equipment, or other sources of extraneous electricity.

a. Do not throw electric blasting cap leg wires through the air. Unfold or unroll near the ground.

b. Shunt EBC detonators in holes that have been primed and loaded until wired into the blasting circuit.

c. Do not load boreholes when an electrical storm is in progress or approaching.
   (1) If holes are loaded and a storm occurs, keep the danger area clear and post flaggers in the same manner as shots are fired.
   (2) If holes are loaded, but not connected to the lead wire, do not shunt the series; leave it open.

d. Use detonating cord or other nonelectric system in place of electric blasting caps in power line areas. If the current cannot be interrupted, use EBWs or nonelectric detonators on work within 300 feet of the line. EBWs and non-electric detonators must also be used within the minimum distance (as described in *IME Publication No. 20*) from a permanent radio or TV transmitting station (See Tables 6-1 through 6-5).

e. Clothing - Although not a major cause of accidental detonation, clothing can generate enough static electricity to detonate electric blasting caps. The most hazardous condition occurs when wearing clothing of different fabrics, particularly wool when worn with dacron or nylon on a dry, cold day. Take these precautions:
   (1) Wear cotton or wool. Avoid wearing synthetics such as dacron or nylon, particularly with wool garments.
   (2) Do not remove coat or sweater while working with detonator.
   (3) Discharge static electricity by grounding body for at least five seconds.
   (4) When hazardous amounts of static electricity exist, use EBWs or nonelectric initiation systems.

BLASTING WITH SAFETY FUSE

NPS-65 prohibits the use of all cap and fuse devices.

BLASTING WITH DETONATING CORD

Detonating cord is a linear form of a high explosive. Unlike black powder, detonating cord contains a core of a very high-velocity explosive that detonates (rather than burns) at a speed of about four miles per second. The core is usually PETN, a high explosive with a velocity of about 22,000 feet per second.

When detonating cord explodes, it sends a shock wave along its entire length which is capable of detonating any cap sensitive high explosive that it comes in contact with. About four inches of detonating cord has the same power as a No. 8 strength blasting cap.

There is less risk in handling and loading when using detonating cord than there is when using caps. However, any blasting system is hazardous. Blasting safety depends on the training and experience of the blaster.

Detonating cord firing systems are often substituted for electric methods of firing under conditions when stray current or radio frequency energy may present problems for electrical blasting.

Most cords detonate at speeds of 21,000 to 24,000 feet per second. The speed depends on the manufac-

turer, the content of the powder train and the cord loads. These loads can vary from 18 to as high as 400 grains per foot. Most popular loads are 25, 40, or 50 grains. Detonating cord resembles safety fuse in appearance. However, you cannot light detonating cord with a match. The cord, like most other explosives, needs an initiating device. The usual method is a fuse cap or electric blasting cap taped securely to the side of the detonating cord, pointed in the direction the explosive is to follow, or travel down the cord.

The main line of detonating cord, which runs through the area where you have placed explosive charges, is called a "trunkline." Lines of cord which run from this trunkline to the individual charges are called "downlines" or "branchlines."

Priming with Detonating Cord

The first cartridge to enter the hole is usually fixed as a primer. This provides a length of detonating cord running the full length of the main charge to the primer at the bottom.

The most common method of priming small diameter cartridges with detonating cord is to punch a deep hole in one end of the cartridge, tie a half-hitch knot in the end of the cord, and insert the knotted end into the hole. The cord is then bent and passed along the cartridge and taped there with plastic tape.

Or, the blaster can punch a downward angled hole completely through the cartridge at about the middle of the cartridge and another hole in the bottom as before. The blaster then runs the cord through the angle hole and inserts the knotted end in the bottom. The cord is then pulled to tighten the cord in the cartridge.

Joining Detonating Cord

In preparing a detonating cord firing system, trunklines must often be extended; branch and downlines must be tied into the trunklines. This calls for tying knots in the detonating cord.

Different types and makes of cord are more flexible and easily tied than others. For connecting lengths of detonating cord, such as in extending a trunkline system or attaching a pigtail, the common square knot is recommended.

For connecting downlines to trunklines, a double-wrap half- hitch or "girth hitch" is most commonly used.

All knot connections must be tight to provide close contact between the two pieces of cord. Plastic connectors are available to make connections in the grades of detonating cord that are difficult to tie.

All lines tied to a trunkline should be at right angles to it. If this is not done, the cord could be thrown off or cut off before it is initiated.

Detonating Cord Firing Systems

For instantaneous firing, the trunkline is unreeled so that it lies across the top of the holes to be fired. It should be reasonably slack to facilitate tying knots.

For two rows of charges, the cord is unreeled in the same manner, but the cord is joined together. This minimizes the chances for misfires.

More rows may be added in the same manner, with the addition of crossties to create a complete circuit, and two waves traveling in two directions around the circuit.

Delay Firing with Detonating Cord

Delay firing with detonating cord is a little more complicated than with electric blasting caps, but still not that difficult. The major problem with detonating cord delays is the possibility of cutoffs. This is because the timing delays are on the surface of the blast area. This exposes the delays to ground movement and flying rocks.

Usually, the greater the delay, the greater the chance for a misfire from trunkline cutoff. This dictates that cutoff problems can be avoided by using the shortest delays possible within the design limits of the blast. The rule of thumb is <u>one millisecond per foot of spacing</u>. Therefore, if the holes were 15 feet apart, the delay should be 15 milliseconds or less. If the material to be blasted is seamy or naturally broken, the delay should be further

reduced. However, a number of interrelated factors affect blast performance, including type of explosive, per-hole load, in-hole load distribution, and per-delay-interval load; the actual delay interval selected must be based on all these factors.

One of the safest and most efficient methods of delay firing with cord occurs with the use of millisecond delay connectors inserted in the trunkline, just before the downline leading to the hole to be delayed. The connectors are molded plastic sleeves fashioned so that detonating cord can be looped and locked into place with a tapered pin at each end. They contain a copper tube delay element in the center. These delay connectors can also be a molded plastic connector block, containing the delay element, connected by a short piece of shock tubing. The cord is connected to the connector blocks on each end of the delay connector. These connectors are delay timing mechanisms which interrupt the normal speed of detonation of the trunkline by a specific amount of time. The connectors contain sensitive explosives and should be treated and stored the same as a blasting cap. When placed into the detonating cord trunkline, they should be placed as close as possible to the hole they are delaying (but at least six inches away from the downline knot). Therefore, they are least likely to be disturbed by the detonation of the previous hole.

Normally, the millisecond connectors are available in either 9, 17, 25, 50 or 75 millisecond delays. When using the 25 millisecond connectors, the detonation takes 25 milliseconds to travel through each connector in its path. In the following diagram, there are five holes loaded and primed with detonating cord, using no delay connectors.

When the electric blasting cap is fired, the detonating cord carries the detonation so quickly that all five holes are considered to fire simultaneously. However, if a 25 millisecond delay connector is inserted in the trunkline before each hole except the first, the shot is broken into five separate delay intervals.

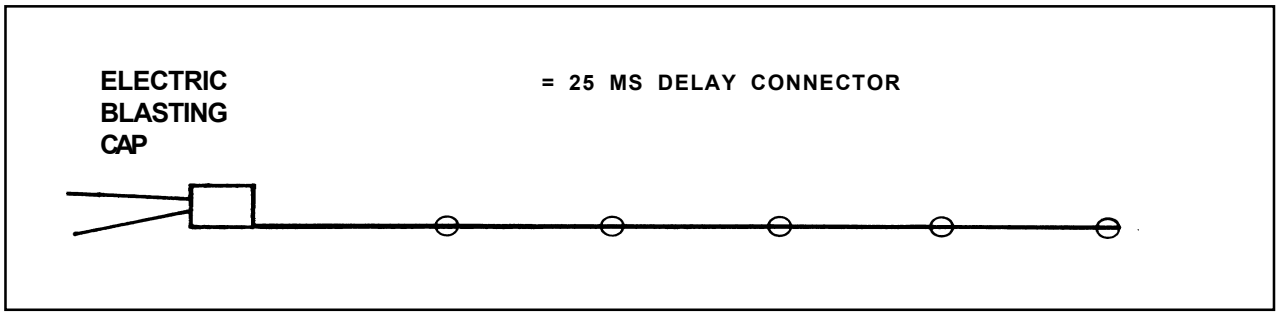

(Figure 6-8) A shot can be broken into five separate delay intervals.

The first hole will detonate immediately with the blasting cap. The second hole will fire 25 milliseconds later because of the delay connector. The third will fire 25 milliseconds later than the second, or 50 milliseconds after the cap has fired; and so on. Incorporating delays into the detonating cord shots increase the fragmentation of the rock being broken and reduces potentially harmful ground vibrations (as does all delay systems).

In the following examples, patterns are laid out with millisecond connectors in various places to create delay patterns. The EBC indicates the point of initiation. The numbers above the borehole represent the time in milliseconds after the cap fires that the borehole will detonate. “X” represents the delay connector inserted in the detonating cord.

Note that there are a maximum of two holes per delay in the following pattern. If the delay connector is omitted on the crossties, the delay pattern becomes the “V cut.” The following is an example of the delay pattern for the so-called “V cut”:

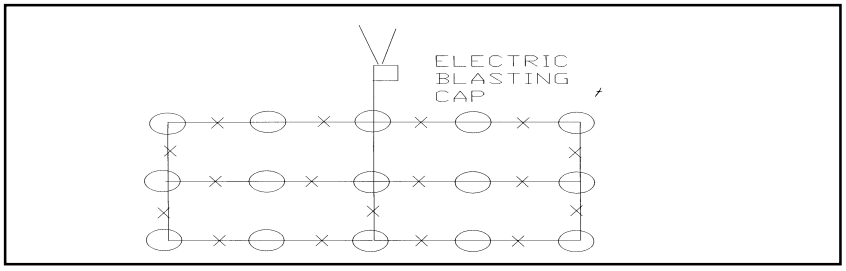

(FIGURE 6-13) V-CUT DELAY PATTERN

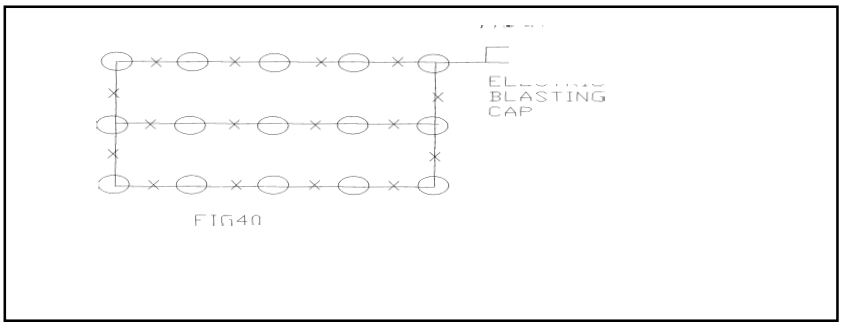

(Figure 6-14) Square corner-cut delay pattern

In the previous delay pattern, there are five holes de[illegible]ith a 50 millisecond delay, i.e., a maximum of five holes per delay.

Another example is the square corner cut which has, in this case, a maximum of three holes per delay.

Detaline Detonating Cord Systems

The Detaline Delay System by Dupont:

The Detaline nonelectric initiation system utilizes a low energy detonating cord. The system can be used with conventional detonating cord downlines or nonelectric in-the-hole delays.

The Detaline system was developed because Dupont felt that there was a need for a reliable nonelectric initiation system that was both quieter and cheaper than standard detonating cord systems. The system consists of:

1. Detaline Cord - A low energy detonating cord, with a 1.4 grain per foot explosive core. This cord is cut from 2000 foot spools to any desired length of trunkline, or downline. The cord is extremely insensitive to mechanical impact. For example, a No. 8 strength blasting cap will not reliably side initiate the cord. The cord will not propagate through a knotted splice. To splice the cord, a Detaline starter is required. A starter is also needed to initiate the Detaline trunkline which extends into the blast pattern.

2. Detaline Starter - Consists of a lime green plastic body molded in the shape of an arrow. Positioned in the center portion of the plastic starter body is a nonelectric detonator with a sealed top closure. The tail end is designed to accept the insertion of a loop of Detaline trunkline. A short sawtooth pin locks the Detaline cord into direct contact with the detonator receptor. The arrow end accepts either a Detaline cord or detonating cord downline, or both, providing the detonating cord downline is looped behind it. Initiation of the Detaline trunkline instantaneously activates the internal explosive charge in the starter resulting in detonation of the base charge and cord locked into the pointed arrow end. The arrow end must always point in the direction of the intended detonation as the nonelectric detonator element functions in one direction.

3. Detaline M.S. Surface Delays - These delays consist of an arrow-shaped plastic body which contains a nonelectric delay detonator element. They are designed to give an accurate time delay between activation of the tail end and detonation of the cord locked in the arrow end. Because the delay element functions only in one direction, the means of initiation must be from the tail end. The hookup is identical to the starter. The delays are used to connect segments of detaline trunkline to form sequentially delayed blasting patterns. The six different delay periods are color coded for easy identification and consist of 9, 17, 30, 42, 60 and 100 milliseconds.

4. Detaline M.S. In-Hole Delay Connectors - These detonators consist of a cylindrical aluminum, shell containing base, priming, and delay explosive charges. The detonator resembles an electric blasting cap except for a special top closure that is designed for insertion of a Detaline cord. A delay tag is affixed to the shell of each detonator for identification of the delay period. Nineteen delay periods from 25 to 1,000 milliseconds are available. The in-hole delay detonator is connected to the Detaline cord downline by inserting the cord into the top closure. The cap and cord can be laced through or half-hitched around a cartridge of cap sensitive explosive (do not use dynamite with this system). The complete primer assembly is lowered into the hole and the Detaline cord downline cut from the spool, leaving enough cord at the collar to attach the Detaline starter.

Hookup procedures for the Detaline system are similar to those used with conventional detonating cord trunklines and M.S. connectors. More elaborate delay sequences are possible when the surface and in-hole delays are used.

NONELECTRIC INITIATION SYSTEMS

These systems are a product of the explosive industry trying to create new methods to provide the blaster a better choice of delay systems and allow compliance with the new laws, or to simply provide a system for their particular needs. These systems may use parts or principles of the older delay systems or products, but essentially they are new systems, with new products.

The Nonel (registered trademark) System
by Ensign Bickford

The NONEL system consists of a thin plastic tubing (.12 inch) with a thin coating (one pound per 70,000

feet) of a reactive material on the inside surface. When initiated, this tube will reliably transmit a low energy signal or spark from one point to another by means of a shock wave similar to a dust explosion. It will reliably propagate this detonation around sharp bends and through kinks. Because the detonation is sustained by such a small quantity of reactive material (.1 grains per foot), the outer surface of the tube remains intact during and after functioning.

Nonel can be initiated by detonating cord, blasting caps, or a percussion cap, and is used in conjunction with the Nonel Lead-in, which is a continuous length of shock tube.

Delay firing with this system is accomplished by using noiseless trunkline delays in conjunction with detonating cord downlines or long lead H.D. Primadets. The system consists of:

1. The Nonel shock tube.

2. The blasting cap with integral millisecond delay element, which initiates the detonating cord downlines or pigtails, or the long lead H.D. Primadets.

3. The Bunch Block for hookup to downlines and Primadets. The block contains the blasting cap with the delay element.

Chapter 7
LOADING BOREHOLES

PRIMING CHARGE

Priming a charge is simply positioning a suitable primer within a charge or column of explosives. The object is to provide the primary-initiating explosion needed to detonate the main charge efficiently.

When the primer is the first cartridge or one of the first cartridges to be loaded into the borehole, it is called bottom priming. In this cartridge, the explosive end of the blasting cap must be pointed toward the collar of the borehole. Regardless of where the primer is placed in a column of explosives, the explosive end of the cap should ideally be pointed toward the main column of explosives.

Bottom priming is generally considered a safer practice than placing the primer at the collar. The most important reason for this is less chance of misfires caused by such things as the cap being separated from the primer, the primer being separated from the main charge, or the explosives becoming separated from each other during loading. Bottom priming initiates the explosive train where the rock is usually the hardest, in order to "carry the toe." There is also less chance of the primer being dislodged, cut off, or blown from the hole when multiple-hole delay blasting is being used.

If the blaster is firing single shots, he or she may position the primer cartridge toward the top of the collar. This is known as top priming. The advantages of top priming are to keep the primer from becoming immersed in water at the bottom of wet holes, and to keep the primer high (more accessible) in the hole if it misfires and needs to be reprimed. Another advantage is that there is no fuse, detonating cord, or leg wires running the full length of the hole which must be protected when loading and tamping.

When priming blasting agents with holes up to 2 1/2 inches in diameter, a full cartridge of high velocity explosives like 60 percent ammonia gelatin, gels, slurries, or cast primers with a blasting cap, is a sufficient charge.

For larger holes, the priming requires much more care, especially if the hole is wet or decked charges are used. A small quantity of a high-velocity primer is better than a large amount of a lower velocity primer. The detonating velocity of the primer must be greater than or equal to the detonating

velocity of the agent for efficient detonation.

The best location for priming a charge is at either end of the charge. The placement of primers anywhere else within the powder column shall *never* be done if there is not also a bottom primer.

With large diameter holes, the shape of the primers, as well as the strength, is important. The diameter of such primers should approach the diameter of the borehole so that the major portion of the available energy is released to propagate a strong detonation wave along the column.

The use of detonator cord as a sole detonant is not recommended, since it could cause deflagration rather than detonation of the charge.

The objective of the primer is to achieve a stable detonation. Neither over-priming or under-priming the agent is desirable. The diameter of the primer must be larger than the critical diameter of the explosive.

Every explosive has a certain critical diameter below which detonation will not propagate beyond the primer point. Confined, ANFO's critical diameter is approximately 1 1/4 inches. That is, a borehole or column of ANFO less than two inches in diameter will detonate in the immediate area of the primer, but cannot reliably carry the detonation process much beyond that point.

The problem of determining how many primers to use and where to locate primers in an explosive column is a difficult one. Too many unnecessary primers add to the cost of blasting, while too few primers rob the blast's efficiency. Basically, the primers must be located so that the detonation travels through the entire powder column before any of the gas and pressure is vented.

In a shallow hole with a short explosive column, only one primer would be needed. However, as the hole depth increases, the time required for the entire powder column to detonate increases correspondingly. The requirement for additional primers is determined by the amount of burden and stemming which confines the gases and pressures. The following equation gives the maximum hole depth when the borehole is bottom primed:

$$H = \frac{2.5 \times Ve \times B + T}{Vr}$$

Where:
- H = hole depth
- Ve = velocity of the explosive
- Vr = velocity of the rock
- B = burden
- T = stemming

As an example, assume the burden for a shot is 11 feet, the stemming is 9 feet, the velocity of the explosive is 11,000 feet per second, and the velocity of the rock is 20,000 feet per second. What should be the maximum hole depth for this type of shot?

$$H = \frac{2.5 \times Ve \times B}{Vr} + T$$

$$H = \frac{2.5 \times 11{,}000 \times 11}{20{,}000} + 9$$

$$H = 27.5 + 9$$

$$H = 36.5 \text{ feet}$$

This equation indicates that if the borehole depth is greater than 36.5 feet, we need an additional primer in the column. As long as the borehole is less than 36.5 feet, one primer located at the bottom of the column will suffice.

When the boreholes are subdrilled, the equation becomes more complicated:

$$H = \frac{2.5 \times Ve \times (B^2 + J^2)^{1/2} + T}{Vr}$$

Where: J = subdrilled distance

Example: Burden = 13 feet
Stemming = 10 feet
Subdrilling = 4 feet
Velocity of ANFO = 12,000 ft/sec
Velocity of limestone = 16,400 ft/sec

What is the maximum hole depth that should be used with a single primer?

$$H = \frac{2.5 \times 12{,}000 \times (13^2 + 4^2)^{1/2} + 10}{16{,}400}$$

$$H = \frac{2.5 \times 12{,}000 \times (185)^{1/2} + 10}{16{,}400}$$

$$H = \frac{408{,}044 + 10}{16{,}400}$$

$$H = 24.8 + 10$$

$$H = 34.8 \text{ feet or } 35 \text{ feet}$$

LOADING, TAMPING, AND STEMMING

LOADING is the process of placing an explosive charge, complete with primer, into a drilled, punched, or dug hole.

Before loading, first test the hole with a pole or measuring tape to confirm that it is the desired depth and to ensure that there are no obstructions or rough spots which might interfere with loading. Check with the driller to see if there are any mud or sand seams in the rock and on the general conditions of the rock. The driller serves as the blaster's eyes and the two must work together. When loading, remember that the wrapper, or shell, on a primer cartridge should never be slit, or tamped.

TAMPING is the compacting of the charge in the borehole to ensure that there are no breaks in the continuity of the column and to increase the density of the charges, as well as fill all available borehole space. A non-sparking pole should be used for tamping.

Cartridge explosives are covered with paper and it is usually a common practice to slit the wrappers lengthwise before placing them in the hole. The purpose of this is to make the cartridge easier to collapse and compact when you later "tamp" the charge.

Primer charges should be lowered or pushed carefully into place. One cartridge may be used between the primer and the loading pole to act as a cushion.

Sometimes cartridges may be tamped sufficiently by merely pressing down firmly with the pole. More often, two or three light blows of the pole are needed to crush the cartridge. Never tamp vigorously or continue to tamp after the explosives have filled-out to the walls of the hole. Only tamp one or two cartridges at a time.

Throughout the loading and tamping operation, great care must be taken to guard against damaging or sharply kinking fuse, lead tubes of non electric blasting caps, or leg wires of electric blasting caps leading to the primer charge.

STEMMING is packing an inert material, such as gravel, sand, or drill cuttings, on top of the charge to the top of the borehole.

When loading a borehole, the blaster must always leave space for adequate stemming. Explosives should never extend to the collar of the borehole.

Stemming does more than confine the explosive. It also protects the loaded explosives from accidental ignition or detonation. In the stemming operation, a small quantity of stemming should be carefully and gently pressed over the charge. The remainder of the stemming should be progressively added and firmly tamped into the hole. Ideally, stemming should be packed so that it is at least as solid as the surrounding earth.

The height or depth of the stemming depends on various factors ranging from the power of explosives, burden, spacing, and material being blasted to material being used as the stemming. The blaster wants to confine the explosive, but still achieve the desired fragmentation. The stemming must occur in an amount sufficient to confine the gases released by the explosives long enough for the gases to do their work, before the rock movement begins and the stemming is blown out. In solid rock, the stemming should be equal to the burden.

However, when blasting rock that is not solid, rock that has seams, cracks, and crevices, and laminated layers, the amount of stemming should be decreased according to this formula:

$$\text{Stemming} = .7 \times \text{Burden}$$

DELAY PRIMERS

Non electric down-the-hole delay priming allows distribution of large amounts of explosives in many small decks or charges in the overburden. This results in a level of shock and vibration below the legal level, even though the same amount of explosives is used. The charges are simply detonated at different time intervals.

Normally, to set off a sequence of blasts at different levels within a single hole, several blasting caps are placed down the hole, with explosives packed at the desired levels separated by stemming material. The complexity of many wires extending out of the hole creates the possibility of attaching wrong wires to the firing system.

With the delay primer, however, decks may be initiated starting at the top, the bottom, or the middle of the burden, simply by choosing the right timing inserts.

The delay primer consists of two parts—the main explosive charge and a delay insert that are joined at the time the hole is loaded. The main explosive charge is cast into a molded plastic container that has a detonating cord tunnel on the side and a sensor well and a cap well at the one closed end. The other end is open.

It takes only a few seconds to make up a delay interval. First, the proper delay insert is selected. The cap end is pushed down onto the cap well, which is embedded in the primer. Then, the sensor end is pushed into the well, which points or touches the detonating cord tunnel.

When the detonating cord is passed through the tunnel, the primer is ready for loading. The first primer made up is held by a knot in the detonating cord. Later, decks in the same hole are created simply by sliding the primer down the cord into the hole.

When the downline is initiated at the surface by a blasting cap or detonating cord, the propagation wave travels through the cord at over 23,000 feet per second. When the wave passes through one of the cord tunnels, it activates the sensor of the delay insert. This starts the delay column burning at a prescribed rate toward the blasting cap in the primer. When the cap is initiated, it explodes, initiating the primer.

Currently, there are two manufacturers of this type of primer.
Atlas Powder Company manufactures the Deckmaster with time intervals from 0 to 500 milliseconds. The product can be initiated with a 25 grain detonating cord.

Austin Powder Company manufactures the Austin Delay Primer (ADP) with time intervals from 25 to 600 milliseconds. This product can be initiated with a 40 grain or more detonating cord.

Chapter 8
BLAST DESIGN

HOLE PATTERNS

Hole array is the arrangement of blastholes (both in plan and section). The basic blasthole arrays are single-row, square, or rectangular and staggered arrays. Irregular arrays are also used to take in irregular areas at the edge of a regular array. The term SPACING denotes the lateral distance on centers between holes in a row. The BURDEN is the distance from a single row to the face of the excavation, or between rows in the usual case where rows are fired in sequence.

(Figure 8-1) Square or rectangular pattern

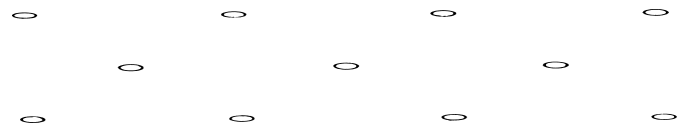

(Figure 8-2) Staggered pattern

(Figure 8-3) Sing

DELAY PATTERNS

Delay patterns, and varying the hole array to fit natural excavation topography, allow for more efficient use of the explosive energy in the blast. Benches may be designed and carried forth with more than one face so that simple blasting patterns can be used to remove the rock. In the illustration that follows (Figure 8-4) shows a typical bench cut with two free faces and fired with one delay per row.

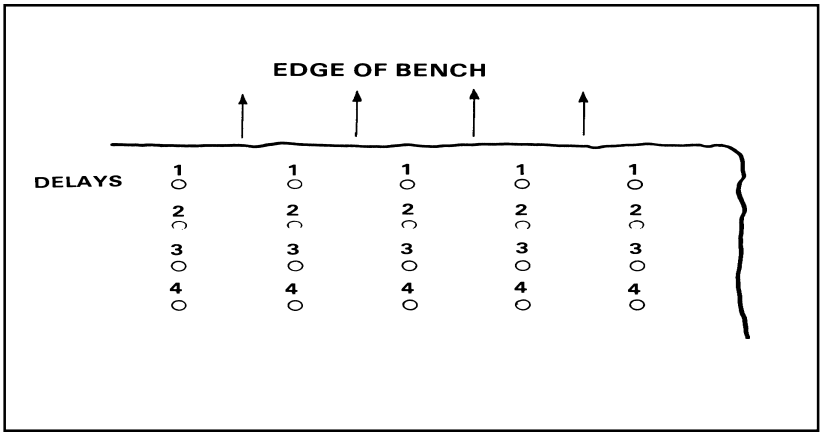

(Figure 8-4) Typical bench cut with two free faces and fired with one delay per row.

Figure 8-5 indicates that the direction of throw of the blasted rock can be controlled by varying the delay pattern. The rock will move forward normally to the rows of holes. If the holes are fired in oblique rows as in Figure 8-5, the rock mass would be thrown to the right during blasting.

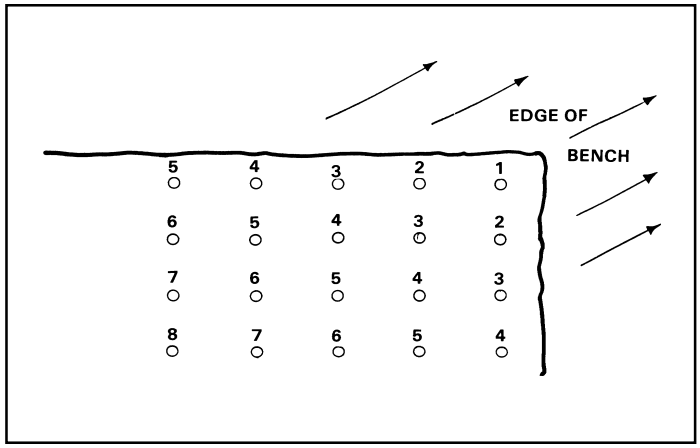

(Figure 8-5) Direction of throw of blasted rock.

POWDER FACTOR

Calculating Powder Factors

The POWDER FACTOR is a relationship between how much rock is broken and how much explosive is used to break it. It can serve a variety of purposes, such as an indicator of how hard the rock is, or the cost of the explosives needed, or even as a guide to planning a shot. Powder factor can be expressed as a quantity of rock broken by a unit weight of explosives. Or, alternatively, it can be the amount of explosives required to break a unit measure of rock. Since rock is usually measured in pounds, there are several possible combinations that can express the powder factor.

Powder Factor = Tons of rock (or cubic yards) per pounds of explosive.

Normal range = 4 to 7
Shallow holes = 1 to 2
External loads = .3

$$\frac{\text{Tons of Rock}}{\text{lbs of Explosives}} = \text{Powder Factor}$$

The higher the powder factor, the lighter the load.
Lower powder factor means more explosives.
Example:

$$\frac{1.5 \text{ tons}}{.25\text{lbs}} = \text{PF of 6}$$

BURDEN-SPACING CALCULATION

From Powder Factor of 1 lb./c.y.

1. Determine borehole size.
2. Determine stemming: 24 x borehole diameter; Divide by 12 to get the number of feet.
3. Determine subdrilling: 1/3 x stemming.
4. Determine amount of hole to be loaded. Use bench height plus subdrilling minus stemming.
5. From Table 4 of Blaster's Guide, determine pounds/foot of explosive.
6. Determine total load. Multiply amount of hole to be loaded (Step #4) by the pounds per foot of explosives (Step #5).
7. Divide the total load (Step #6) by the bench height. This will equal the number of cubic yards that can be broken at 1 lb/cy.
8. Determine approximate square pattern from Table 1 of Blaster's Guide, or multiply the number ob
9. Adjust to a rectangular pattern of the same total cubic yards.
10. Adjust stemming and subdrilling amounts.

NOTE: For powder factor other than 1 lb/cy: divide the resultant number of cubic yards obtained in Step #7 by the powder factor desired.

Formula for determination of resultant height of water when using cartridges to "dry up" the borehole.

H = Resultant height of water in feet
Dh = Borehole diameter in inches
W = Water in hole in feet
Dc = Cartridge diameter in inches

$$H = \frac{Dh^2 \times W^2}{Dh^2 - Dc^2}$$

BOREHOLE COUPLING

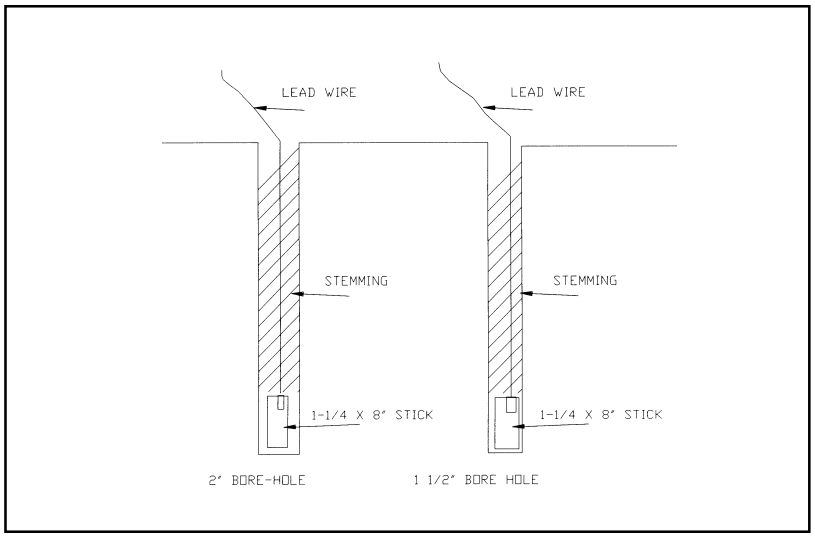

(Figure 8-6) Borehole coupling.

Air: The Enemy of an Explosive

Borehole coupling is critical to good fragmentation of rock. The borehole should never exceed the diameter of the explosive by more than one-half inch. The air gap around an explosive charge absorbs the shock energy and results in poor fragmentation.

The explosive column illustrated in Figure 8-6 on the right will produce the best fragmentation.

EXPLOSIVES ECONOMICS

The economic analysis of the use of explosives is an important part of blasting operations in mining and construction. Explosives are energy, and the efficient use of this energy is a major factor in keeping rock blasting costs under control. High-energy explosives enhance fragmentation, which ultimately produces a positive effect on production costs. The degree of fragmentation or movement obtained is directly related to the amount of operation. This relationship is illustrated in Figure 8-7.

explosive energy applied to the surrounding rock. Analysis of the cost of explosives requires that the effects of explosive energy be placed into proper perspective within the entire drilling, blasting, handling and processing operation. This relationship is illustrated in Figure 8-7.

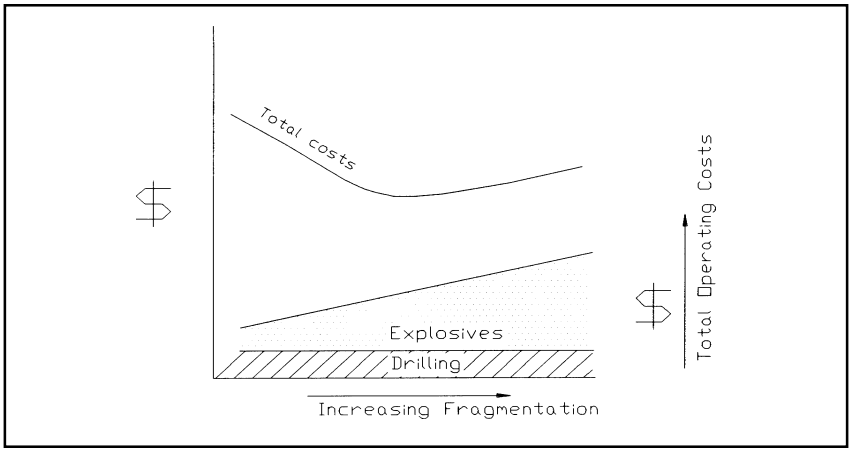

(Figure 8-7) Analysis of efficient blast design..

Efficient blast designs combined with the proper choice of explosive can produce better fragmentation with associated lower operating costs compared to blast designs and explosives used under adverse conditions. As a result, the efficient use of explosives, along with the proper borehole diameter selection, are the keys to a successful blasting program.

Cost of Energy

The only way to evaluate accurately the cost of explosives, is to examine the effects of blasting and to determine the optimum degree of fragmentation. In most cases, the productivity rate is influenced by the degree of fragmentation. To obtain well-fragmented rock by blasting, explosive energy must be well distributed throughout the rock. To be effective in rock blasting, this energy must be applied at the proper millisecond delay interval to allow for optimum rock movement.

The type and cost of explosives will vary from one operation to another, dependent upon many conditions. The geologic formation, such as hard seams, cap rock, hard bottom, or large toes, dictate the use of high-energy explosives. Water-filled boreholes require the use of water-resistant products at a premium cost. The cost of a product upgrade to cope with wet conditions is an obvious input. Other variables, such as the size of mucking equipment and drilling equipment, fragmentation tolerance, and production demands, will also influence the choice of explosives.

Although a significant recurrent expense, the cost of explosives is usually only a small percentage of the total costs encountered in breaking, moving, and processing rock and ore. The small difference in the cost of a higher energy explosive is insignificant compared to a decrease in production caused by insufficient fragmentation.

Energy Factors

The *energy factor* describes the energy distribution within a given unit of rock. Energy distribution within a shot is measured by the energy factor, which compares the explosive energy to a quantity of rock broken. The explosive energy distribution within the entire blast is then evaluated along with its resulting fragmentation and

its effect on operating costs. Blasting analysis next becomes a function of the energy factor, explosives cost, fragmentation results, and subsequent production.

Proper energy distribution is important in obtaining the desired fragmentation and movement of the bottom or toe portion of the shot. Energy distribution becomes an important factor when wet holes are encountered, as cartridged explosive products must be smaller than the borehole diameter to allow for easier loading. The resulting decrease in the diameter of the explosives column, reduces the amount of explosive energy within the borehole. The blaster must use higher energy explosives to balance the lost energy.

Necessary explosive energy adjustments at the borehole can be made to compensate for excessive toe, hard bottom, or cap rock. In addition, higher energy explosives can be substituted for lower energy explosives to increase the energy distribution within the rock, thereby increasing fragmentation. However, if fragmentation was satisfactory before the introduction of additional explosive energy, the improved energy distribution within the shot will allow for an expansion of the drilling pattern, with resultant decrease in overall drilling costs.

Improved production rates and consequent cost reduction in digging, hauling, crushing, or moving rock are the major benefits obtained from the efficient application of explosive energy. There are other benefits from better fragmentation, such as reduced secondary blasting, reduced power consumption at the crusher, and less wear and maintenance on equipment with less down time.

Explosive efficiency is the ratio of the amount of energy released to the calculated thermochemical energy. Emulsions are highly efficient explosives, due primarily to their microscopic particle size. In contrast, explosives with varying particle size, such as ANFO or water gels, will not have a uniform burning rate, and therefore, will not be as efficient. Studies comparing the calculated thermochemical energy to the measured energy by the underwater bubble energy technique, have shown that the emulsions released 93 percent of the calculated thermochemical energy. Water gels with varying particle sizes achieved only 55 to 70 percent of their calculated thermochemical energy. The explosive efficiencies of ANFO, and particularly of high-density ANFO, range from 50 to 80 percent of their calculated energies. As a result, emulsion explosives are not only thermochemically efficient, but are cost-efficient as well.

Drilling and Loading Considerations

While the relative rock hardness has an effect both on drilling and explosives performance, environmental factors exert their influence as well. Among the factors to consider in studying drilling costs are: bit costs, labor, fuel consumption, penetration rates, maintenance, machine life, and machine cost. For example, severe water conditions in the borehole will require more expensive explosives resulting in a higher energy cost than would be experienced with a maximum use of ANFO. In semiarid regions of the southwest United States, drilling costs may represent as much as 80 percent of the total drilling and blasting costs, mainly because of utilization of the lower cost explosive. By contrast, in the northeastern United States, hard rock formations exist in a relatively wet environment, where the explosives costs can be as much as 70 percent of the total drilling and blasting expense.

Blasting vibrations and air blast concerns may have a direct influence on which blasting program the operator may select. Because of such constraints, the blaster may need to impose limits on quantity of explosives per delay, which relates directly to hole sizes and depths.

Borehole diameter and the depth of the hole must always be evaluated in any cost analysis including explosives. Relatively expensive explosives required for efficient performance in a three-inch diameter hole may be unrealistic from a cost standpoint for a six-inch diameter hole. Though drilling cost in a six-inch hole in similar material will be at least twice that for the smaller hole, less expensive explosives usually can be utilized in the larger hole with no sacrifice in explosive performance.

When contemplating a change in drill hole size, compare the area of influence associated with the respective

holes. Whereas a three-inch diameter hole has an area of 7.07 square inches, the six-inch diameter hole is four times greater, with an area of 28.27 square inches. The same relationship exists with respect to energy of similar explosives.

Different blasting conditions may indicate both a change in bench designs as well as explosive selection. An increase in hole size, along with the same explosive, may still fall short of providing the desired results. Such situations may also require the adoption of a higher velocity, more energetic explosive. Where drilling and blasting conditions are both severe, the operator should use premium explosives, at least in the bottom one third of the drill hole. Clearing the toe, and therefore contributing to a smoother floor, is a major asset to improve overall economy because of the favorable impact on excavation and haulage costs.

BLAST DESIGN

Rules of Thumb for Blast Design

Nearly every occupation or discipline has its own particular "rules of thumb," and blasting is no exception. These are rules, not law. The following is a set of guidelines based on practical experience and technical information. Blasting projects vary so much that there can be no set of rules to cover every possible contingency. Be sure that the advantage gained from breaking the rule is greater than the penalty to be paid for that violation.

RULE 1: The detonation velocity of the explosive should match, as closely as possible, the sonic velocity of the rock to be blasted.

The rock's sonic velocity (VSO) is a reliable indicator of its structural integrity and resistance to fragmentation. As the detonation velocity of the explosive (VOD) increases toward the rock's VSO, fragment size decreases and uniformity of fragmentation increases. If large fragments are desired from a blast, such as for ballast rock, then the VOD should be considerably lower than the rock VSO. Obviously, if the VOD is too low relative to the rock VSO, the result will be huge irregular blocks or chunks.

If detonation proceeds at the same, or close to the same, speed as the transmission of sound waves, the resulting breakage will be optimum, more uniform, and equal along the entire explosive column. Maximum borehole spacings and burdens can then be used.

There is no value in using an explosive that has a VOD greatly in excess of the VSO of the rock, since there is little or no improvement in fragmentation above the VSO.

When selecting an explosive to match up the VSO of a rock mass, there is no need to match the VOD of the explosive to within a few feet per second of the VSO of the rock. Variance in the velocities below 10 percent either way should be more than sufficient.

RULE 2: Generally select the most dense explosive possible, consistent with water, loading conditions, and desired results.

The more dense the explosive, the more of it that can be placed in a borehole of a given size. Explosive density is expressed as its weight in g/cc, and since water has a density of 1.0 g/cc, it is obvious that an explosive with a density less than 1.0 will float, whereas, if the density is more than 1.0, it will sink. Less obvious is that the higher the explosive density, the greater the weight of explosive material (potential energy) that can be placed within the borehole.

For example: A single borehole 3.5 inches in diameter and 33 feet deep will hold, if stemmed 8 feet with 127.5 pounds of an explosive with a density of 1.25 g/cc. If an explosive with the same VOD, but with a density of 1.4 g/cc, was used in that borehole, the amount of explosive which can be loaded in the hole increases to 142.5 lbs.

If a powder factor of one pound per cubic yard is required, the spacing and burden for the explosive with

the density of 1.4 will be greater than that for the explosive with a density of 1.25.

RULE 3: Select explosives according to the characteristics of the rock formation to be blasted.

Although Rule 1 states that explosives should be selected on the basis of matching VOD to VSO, and Rule 2 stresses high density, there are many instances where the structural characteristics of the rock formation allow, or even require, use of lower density, lower velocity explosives (i.e., ANFO).

In those instances where the planes of separation in the rock are smaller than the degree of fragmentation required, the rock can often be blasted by merely "bumping" the rock with explosives.

A close study of the breakage planes in the rock mass will indicate whether or not a lower velocity and density explosive should be used. This subjective determination hinges upon knowledge of the rock and experience with varying rock formations.

RULE 4 - When using slurry or water gel explosives, always determine the critical temperature below which the explosive will fail to reliably detonate.

Almost all slurry explosives have a critical temperature below which they may not detonate, or may not sustain detonation in elongated columns. This critical temperature is usually noted in the technical data sheets supplied by the manufacturer or distributor. Under no circumstances should the explosive be used when the temperature of the explosive at time of loading is below that critical temperature.

In addition to the temperature of the explosive itself, consider the temperature of water that may be in the borehole, since slurry products are often used in wet boreholes. In many parts of the United States, particularly in the northern states during winter months, it is not unusual for water temperature in the boreholes to reach below the critical temperature of the explosive.

Guidelines for Blasting Geometry

RULE 1: The distance between holes (spacing) should not be greater than one-half the depth of the borehole.

When the effect of a blast is simulated on graph paper using an assumed or idealized angle of breakage of 90 degrees, the diagrams indicate that in each instance where the distance between holes in a row is greater than one-half the depth of the hole, the angles of breakage intersect so far above the bottom of the holes that the primary relief for each hole is to the surface. This causes both a great deal of vertical throw and a very uneven bottom. The greater the disparity between depth and spacing, the more pronounced the effect will be, to the point where the angles of breakage intersect above the surface of the shot.

RULE 2: In any blast where there is hole-for-hole delay, the spacing to burden relationship should be seven to five.

Several investigations about the science of rock mechanics have suggested that the optimum spacing to burden relationship should be 2:1, with the burden equal to one-half the spacing. Field experience shows that this relationship has two drawbacks. First, the blaster may assume that this relationship will apply when there is no delay system at work, when in fact, the optimum spacing to burden relationship in all instantaneous blasts should be 1:1 to ensure equal distribution of explosives in the blast. Second, if an instantaneous blast is fired with a spacing to burden relationship of 2:1, the back wall of the blasted area will, in most cases, be "sawtoothed."

When delays are used, particularly when there is hole-for-hole and row-for-row delay, with no two holes firing on the same period, the angle of breakage approaches the idealized ratio of 2:1. The slight addition of burden avoids the possibility of "blowout," or violent throw from relieved burdens during the shifting of burden from one hole to another.

RULE 3: Stemming should be equal to the burden.

The purpose of stemming, it has long been assumed, is to return the borehole to its original condition as much as possible in order to reduce noise, and possibly rifling at the top portion of the hole. Stemming also serves to confine and maximize efficient use of the explosive's energy.

If the explosive detonation process takes place up the borehole, the surface of the rock above the stemming is as much a free face (assuming there is a free face) as the free face that is parallel to the boreholes. If the stemming is greater than the burden, the rock at the top of the borehole will have less cracking from reflection and refraction of compressive and tensile waves. Then stemming should equal burden, and be of such material as to return the rock close to its original condition. Drill fines, tamped into the hole are ideal.

RULE 4: Subdrill (if necessary) should be between .3 and .5 of spacing.

Some investigators state that subdrill should be equal to .3 of burden. This is true in instances where spacing and burden are equal, such as with instantaneous blasts. It will also work when there is row-for-row delay. In blasts where the delay system is both row-for-row and hole-for-hole, however, the subdrill should be determined by the largest dimension, which is the spacing. An average subdrill of .4 of spacing is best to use for planning purposes.

Chapter 9
GENERAL
ROCK REMOVAL

A MATTER OF SCALE

Nearly all of the research and technical design data available to the blaster has come from large-scale industrial applications (quarrying, mining, and highway construction). One result is that most blaster's guides, including this one, tend to discuss hole diameters, depths, burdens, and spacing distances that are completely foreign to the small-scale blaster. However, the blast design principles and techniques that work for six-inch holes, 50 feet deep, also work for 1.5-inch holes that are six feet deep. It is simply a matter of scale, and the blaster will find that the hole diameter (i.e., the limit on explosive load per foot of borehole) is the pivotal factor from which the rest of the blast design evolves.

PRINCIPLES OF DRILLING

Before addressing the field of explosives engineering, an area of major importance must be examined. This subject is the preparation of the shot area, better known as "drilling the holes in the rock." Any explosive engineer, blaster, shot-firer, or hole-loader will tell you that the shot can be only as good as the drilling allows. It is extremely important that the holes are drilled where they will do the most good, not just for the convenience of the driller. The best explosive engineer can not make up for improperly drilled holes.

The common drill systems used today are rotary, percussive, and rotary-percussive systems.

Drill bits may be classified by the shape of the cutting surface. Forces are transmitted to the rock, through the bit, and to the cutting surface. The stresses at the contact, as well as underneath the rock, break it. The rock fails in three ways: *crushing, chipping, and spalling.*

The blaster must analyze the mechanics of a drilling system to reveal the limitations and advantages for each type of rock. For example, a rock with a high compressive strength is likely to respond well to the crushing and chipping action of the percussive bit. On the other hand, a relatively weakly bonded rock may

not respond much better to percussive action, but will give good performance for a wear-resistant rotary drag bit.

Rotary Drills - Impart two basic actions through the bit into the rock: axial thrust and torque. Rotary drills have higher torque than either percussive or rotary-percussive drills and require high sustained thrust. Rotary drills are distinguished on the basis of the drill type. These are roller bits, diamond bits, and drag bits.

Roller Bits - Penetrate the rock mainly by crushing and chipping. They have conical cutters, usually made up of sintered tungsten carbide, that revolve around axles attached to the bit body. When the load is applied, the cutters roll on the bottom of the hole as the drill stem is rotated. They are available in sizes from three to 26 inches.

Diamond Bits - Include those which cut full holes and those which take a core. When drilling with diamond bits, the hole is advanced by abrasive scratching and plowing action. The bit is cylindrical in shape with diamonds set in the contact area. Diamond bits require greater rotation, but less pressure. They are not used much in blasting because they are quite expensive.

Drag Bits - Designed with two or more blades. These blades are faced with sintered tungsten carbide inserts. They are usually used in soft rocks such as clay-shales.

Power Augers - Used in soft formations to speed up the removal of cuttings. The bit consists of a flat blade that continues up the shaft as a spiral. Cuttings move away from the bottom of the hole along this spiral. They are used in very soft rocks.

Percussive Drills - Penetrate rock by the action of an impulsive blow through a chisel or wedge-shaped bit. Repeated application of a large force of short duration crushes or fractures rock when the blow energy is strong enough. Torque, rotational speed, and thrust requirements are lower for these systems than for rotary or rotary-percussive systems. Penetration rates in percussive drilling are proportional to the rate at which energy is supplied by a reciprocating piston.

Percussive Machines - Include churn drills, surface hammer drills, down-the-hole hammer drills, and vibratory drills.

Hammer Drills - Capable of drilling holes one and one-half to five inches in diameter. Hammer drills are used extensively for blasthole drilling.

Jackhammers - Hand-held air or gasoline driven tools weighing from 37 to 57 pounds. Air driven models require 60 to 80 cubic feet of air per minute. Hole sizes range from one and one-half to two inches; depth runs from two to eight feet.

Wagon Drills - One of the more useful tools in rock excavation (usually mounted on rubber-tired wagons). Today, however, they are being replaced by crawler drills. These are heavier units capable of drilling holes between two and one-half to five inches, at any angle in all types of rock. They require 50 percent more air than wagon drills—450 CFM. Hole depths of 40 feet are routine and have reached 100 feet in some cases. Crawler drills produce blastholes two to three times more per shift than wagon drills.

Rotary-percussive Drills - Impart three actions through the drill bit. These are rotary action, axial thrust (of

lower magnitude than rotary drilling, but higher than in percussive drilling), and impact. The mechanism of rock failure may be considered as a combination of the rotary and percussive.

THE IMPORTANCE OF DRILLING AND THE DRILLER

The best planning, figuring, calculations, and explosives are worthless if the area to be shot is not drilled properly and responsibly. Basically, if the drilling goes bad and is off pattern, the entire blasting program will fail. If the driller is informed to remain on a specific pattern, he must stay on the pattern and not alter it unless he consults with the blaster-in-charge.

The driller must also keep the blaster informed of any changes in the rock that he is drilling or any mistakes he makes so that the blaster may make adjustments to the shot. The driller informs the blaster about cracks and shifts in the rocks, changes in the strata and sand, or mud seams in the rock, so that explosives can be loaded in the hole with these factors taken into consideration. The driller must also inform the blaster of any "short holes," any holes that are not the expected or planned depth. In other words, the driller serves as the eyes of the blaster. Consequently, the drill and driller can make or break a blasting operation.

BENCH BLASTING

The most common method of production blasting in quarrying, strip mining, and construction excavation is BENCH BLASTING. This method involves inclined, vertical, or horizontal blastholes drilled in single or multiple row patterns to depths ranging from a few to 100 feet or more, depending on the desired bench height. Where the excavation is shallow (less than 20 feet), one level may suffice. In deep excavations, a series of low benches, offset from level to level, are recommended for operational convenience. Bench height is often two to five times the burden, and the ratio of burden to spacing is often l:1.25 to 1:2.

SECONDARY BLASTING

Bench blasting ideally reduces all rock to a desired rubble size range. This is basic in order to facilitate handling of rubble or muck to meet limitations imposed by equipment, such as bucket size, or to produce a usable material.

Actually, even a satisfactory blast may leave a few oversized blocks that must be broken by blasting with a light charge placed in small drill holes in the boulder, a technique known as BLOCKHOLING. A quick method for smaller boulders, MUDCAPPING, involves blasting with a part of a stick of powder or a small, bagged binary charge placed against the boulder and covered with mud or a bag of sand. Plastic bags filled with water can also be used. Mudcapping and blockholing may produce objectionable air blasts. Breakage with a drop ball may be preferred, whenever that equipment is adequate and available.

Boulder outcroppings in fields under preparation for farming or on road right-of-ways may also require blasting. There are four methods commonly used in blasting rock boulders and outcroppings. Two have been discussed: mudcapping and blockholing. Another method, SNAKEHOLING, includes the placement of explosives under the rock. SEAM BLASTING is used when the blaster is lucky enough to find a crack or seam, and load the explosive charge into it. The method selected will depend upon a number of factors, including the equipment at hand and the depth of the rock in the earth. Secondary blasting is noisy and generally produces many flying fragments. Accordingly, it is seldom suitable for use in residential areas.

LIFTERS AND SNAKEHOLES

Rough terrain or loose overburden may prohibit drilling the bench from the top. In such cases, LIFTERS (nearly horizontal blasthole charges), may be used instead.

SNAKEHOLES are similar to lifters except that they are always located at the toe of the slope. They should be inclined slightly downward. Snakeholes may also be supplemented above with rows of lifters inclined 20 to 30 degrees upward from horizontal. The pattern is commonly fired in sequence, starting at the top. High quarry faces (75 feet and more) have been successfully blasted using a combination of snakeholes and vertical holes. Lifters and snakeholes are not commonly employed in structural excavation. Their use generally requires that previously blasted rock is excavated before drilling can commence for the following rounds. Snakeholes may produce excessive flyrock, and if they are drilled on an incline to below the final gradeline tolerance, the final rock surface is damaged.

Excavations are also opened by plow or deep "V" cuts where an initial cut is then enlarged in one or several bench levels. The depth of each lift or bench is usually about 10 to 30 feet. Shallower depths prove considerably more efficient. With large or inclined holes, the benches may be 50 feet or more in height, but this should not be considered in structural excavation. Bench heights in cuts through hilly areas change continuously and burden must be modified accordingly.

CHARGE DISTRIBUTION

Rounds in bench blasting should contain an optimum distribution and weight of explosives. The bottom few feet of the hole is usually loaded heavily with a dense, higher velocity explosive in order to pull the toe. Bottom priming helps to carry the toe. In dry holes, where a waterproof explosive is not necessary, free running blasting agents can be used for the entire charge column, if primed heavily at the bottom with a dense, high-velocity explosive.

TRENCHING

Trenching cuts through rock may be a necessary for culverts, pipelines, sewer lines, and other underground utilities. Trenching is inherently difficult because there normally is no relief to the blastholes. Relief must be *created* by the detonation of the first hole or holes, and maintained by the sequential detonation of following holes. Blasting may only loosen material for subsequent removal mechanically or may cast much of the material out beside the trench.

An initial blast of one or two holes creates a crater toward which succeeding delayed charges move the material. A single row of holes is normally used for narrow trenches; two staggered rows are recommended for trenches up to five feet wide; and trenches greater than five feet wide usually require additional rows of holes. Shallow trenches are commonly subdrilled one to one and a half feet, while deeper trenches should be subdrilled 0.3 times the burden. Deep trenches should be blasted in lifts of four to five feet.

The drill patterns used in trenching range from the simple single row of holes to more complex triple-row "Flat-V" or "Five-Spot" patterns. These generally involve delays in various patterns related to rock continuity and trench width, depth, and shape. The simplest hole pattern, a single row of holes, is also the most difficult to make effective unless the trench is very shallow and the holes are closely spaced. Since the initial relief on trench blasts is essentially vertical, each hole load must fragment the rock around it and attempt to move that rock

upward out of the trench. This is extremely difficult to do with single-row patterns; either most of the rock, though loosened, remains in the trench or, in the attempt to move it out, the powder load is made so heavy that uncontrolled flyrock becomes a serious problem. Delaying single-row patterns is not a feasible option in many instances, since the hole spacing required for acceptable fragmentation is so close that cutoff risk is high (if the spacing is increased to prevent cutoffs, the blast result is too often individual unconnected craters or even shotgunning of some holes).

Double-row patterns allow for creation of a better relief zone within the trench and the safe use of delays, and are regularly used where trench bottom width ranges from three to about eight feet. Depending on the configuration of the rock at the point of initiation, the holes may be drilled opposite each other in the rows, and delayed by each of the two holes. This approach has the disadvantage of casting all rock down the line of the trench, from which it must be mechanically excavated.

Another option is to delay by row, sometimes called "side casting," which if properly timed, allows for casting some to most of the rock out of the trench, but often increases the cutoff risk because of the relatively close distance between rows. The most common and generally effective approach is to offset the holes in each row and employ an echelon delay sequence, often with an opposite hole at the initiation point to provide a larger initial relief zone. This method has the advantage of allowing the safe use of delays in a pattern which casts much or most of the rock to one side of the trench. Another distinct advantage of double-row patterns is that they allow angling of the boreholes, greatly enhancing the ability of the fragmented rock to move up and out of the trench.

Where trench bottom width increases beyond six or seven feet, the use of triple-row patterns becomes more common. This configuration extends the advantages of double-row patterns (use of delays, trench-clearing delay patterns, angled trench-side holes) to the wider trenches. One of two delay patterns is typically chosen: the echelon pattern or, in very wide trenches in competent rock, a Flat-V pattern. The Flat-V pattern may sometimes produce cleaner trench walls, but has the disadvantage of casting all rock down the line of the trench as in the double-row pattern.

Effective and safe trench blasting, given the constraints of vertical relief and tight hole patterns, shares much with shaft and tunnel blasting. All include the difficulty of and the necessity for accurately judging rock type and competence, and controlling drill alignment. Trench blasting should not be undertaken by the novice blaster. Working with an experienced trench blaster is a prerequisite to safe and effective trenching.

NEED FOR CONTROLLED BLASTING

Overbreak and fracturing, or BACKSHATTER, from excavation blasting often necessitates the removal (scaling) of loose material beyond the designed face. In addition, blast damage to the final rock face may cause instability and rockfall hazards. For these reasons, among other, controlled blasting is extremely important in excavation for structures and elsewhere.

Controlled blasting techniques minimize overbreakage and permit steeper slope designs because of increased mechanical stability and resistance to weathering. The techniques also reduce deeper fracturing and weakening of the finished excavation. These methods can also be used to cut an excavation to accurate lines and around vertical and horizontal corners. Improved appearance of rock slopes may also result. Four controlled blasting techniques in use today are: pre-splitting, smooth blasting, cushion blasting, and line drilling.

Pre-Splitting

Sometimes called "pre-shearing," this technique is based on the fact that the detonation shock wave is

stopped at and reflected from any "free face," including a crack or seam. In pre-splitting, a crack (free face)

is created at the excavation line *prior to* the detonation of the main fragmentation load. A row of holes is drilled along the excavation line, at a spacing of four to 10 times the hole diameter (depending on rock type and competence), and with a burden distance to the adjacent row of production-blast holes of 0.5 to 0.7 times the main blast burden. Pre-split holes must be large enough to allow decoupling of the explosive load at 2.5:1 to 3:1 (i.e., a one-inch diameter cartridge in a three-inch hole), which reduces the risk of excessive hole crushing or backshatter. The initial load in pre-split holes is usually 1/4 pound per foot, the load being subsequently adjusted as results dictate. Some blasters never stem the pre-split holes, but the normal approach is to block the hole above the highest explosive charge and stem the hole above this block; using a section of plastic hole liner to contain the stemming is an efficient way to do this.

The pre-split row is fired *before* the main production blast, either as a separate blast or by using delays to achieve 100 to 200 milliseconds between pre-split row detonation and main blast detonation. In theory, the fragmentation generated by the main blast proceeds and is halted at the pre-split crack, leaving a sound face. It must be remembered that the pre-split blast generates little or no fragmentation other than the between-holes crack, so load, properly distributed, to affect both the normal row burden and the behind-row burden. This fragmented burden between the pre-split and adjacent main blast rows will not be cast away from the excavation line, but will collapse to its base.

Since the mechanism by which the crack is generated between pre-split holes is not fully understood (it may be either compression-wave-generated radial cracking, or gas-pressure-generated tensile rock failure, or some combination of both), there are a variety of explosives considered suitable for pre-split loads. The pre-splitting theory accepted initially was radial cracking, which resulted in a dependence on very high-velocity products. However, successful pre-splitting has been achieved with low-velocity emulsions, and even Pyrodex. Today's market offers a range of pre-split products from high-velocity water gels packaged in one-inch by 50-foot rolls to lower-velocity emulsions and dynamites packaged in cartridges 16 to 24 inches long. Some pre-splitting has been successfully accomplished using 200 to 400 gr/ft detonating cord as the load in one and one-half to two-inch diameter holes.

The effectiveness of the pre-split technique is extremely dependent on maintaining excellent drill alignment. For that reason, the maximum depth for pre-split holes should be 40 feet, and the maximum alignment deviation allowed in any direction is six inches in 50 feet (i.e., one percent).

Developing an effective pre-split design, which can vary by rock type and competence even within a single blast, requires adjusting the initial design as blast results indicate. It will be found that the factors which most often cause the poor results are: 1) poor hole alignment, 2) holes too far apart, 3) hole load in pounds per foot either too high or too low, and 4) decoupling either too high or too low.

Smooth Blasting

The principle in smooth blasting is to control the load distribution and the shock wave energy release in the excavation-line holes to produce between-holes shearing, while preventing back-shatter or excessive hole crushing. The holes along the excavation line are given a spacing not greater than 0.7 times the row burden, and the per-hole load is adjusted downward accordingly. The load is decoupled from the hole, usually at around 2:1 (i.e., a one-inch cartridge in a two-inch hole), and the hole is blocked and stemmed above the highest charge as in pre-splitting.

In smooth blasting, normal blast sequence is followed, with the excavation-line row the last to fire. There is normally no delay between holes in the excavation-line row, since that would disrupt between-holes shearing. This technique allows for displacement as well as fragmentation of the burden on the excavation-line row. As with pre-splitting, hole alignment is critical, and poor alignment is the most common cause of poor results. Insufficient decoupling will result in excessive backshatter, which means the additional drilling done to set up the smooth blast will have been wasted.

Cushion Blasting

This technique is the same as smooth blasting, except that the annular space between the cartridge and the hole wall in the decoupled holes is filled with loose, crushed stone. The loose stone partially absorbs, or cushions, the energy of the detonation shock wave. This technique is not widely used due to its requirement for a volume of small, crushed aggregate on the job site (i.e., cost).

Line Drilling and Close Drilling

Line drilling consists of placing a row of unloaded drill holes along the excavation line, spaced on centers no more than two times the hole diameter. These form a surface of weakness to which the primary blast can break. They also reflect some of the shock waves. Increased use of pre-splitting for economical reasons has reduced line drilling to a supplementary role. Line drilling may be required prior to pre-splitting for at least 10 feet in both directions from a 90-degree corner. In this procedure, the depth of pre-split holes must not exceed that of the line-drill holes.

In line drilling, the primary blasting is conducted to within two or three rows of the line-drilled row to decrease the burden. The row of primary blastholes nearest the line-drilled row should have 75 percent of the usual hole spacings, and should be 50 to 70 percent closer to the line-drilled row than to the last primary row. The powder factor may also be reduced.

Because of the tedious drilling necessary, line drilling is more useful in easily drilled homogeneous rock. Despite high costs, line drilling has application where even pre-splitting may cause excessive wall damage (such as 90-degree corners in excavations, or steps in bedrock), and it may be required where other structures are adjacent to an excavation.

Close drilling may be specified for finished surfaces not requiring line drilling. Close drilling consists of holes spaced farther apart than line-drilled holes, but closer than pre-split holes. The holes may be loaded or unloaded as necessary for proper blast performance.

SHOCK ENERGY/HEAVE ENERGY

Two kinds of energy are created at the detonation of an explosive:

A. Shock Energy - The velocity-shock breaks or cracks rock, but does not move the rock. The harder the rock, the better this energy works. Change in formation density, cracks, mud seams, etc., will cause this energy to return to the area of origination.

B. Heave Energy - The energy created by the expansion of the gases formed when an explosion occurs. This energy, trapped in a borehole, performs useful breaking of rock and is the energy that displaces the rock when the explosion occurs.

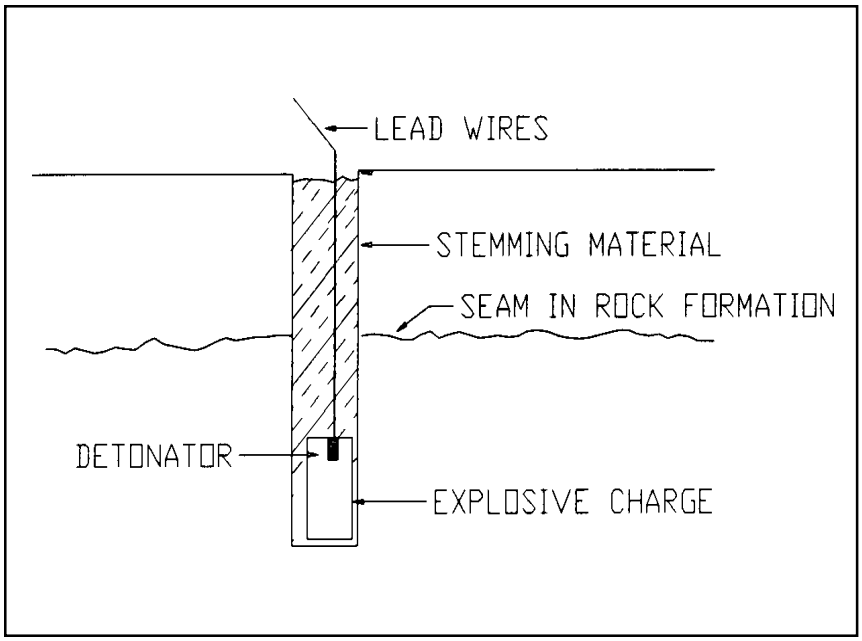

(Figure 9-1) It is possible to fracture the rock in the bottom portion of a borehole without disturbing the upper portion of the borehole.

DEAD PRESSING

Dead pressing is the phenomena that affects the critical diameter of an explosive causing misfires. Explosives most affected by this phenomena are slurries and water gels.

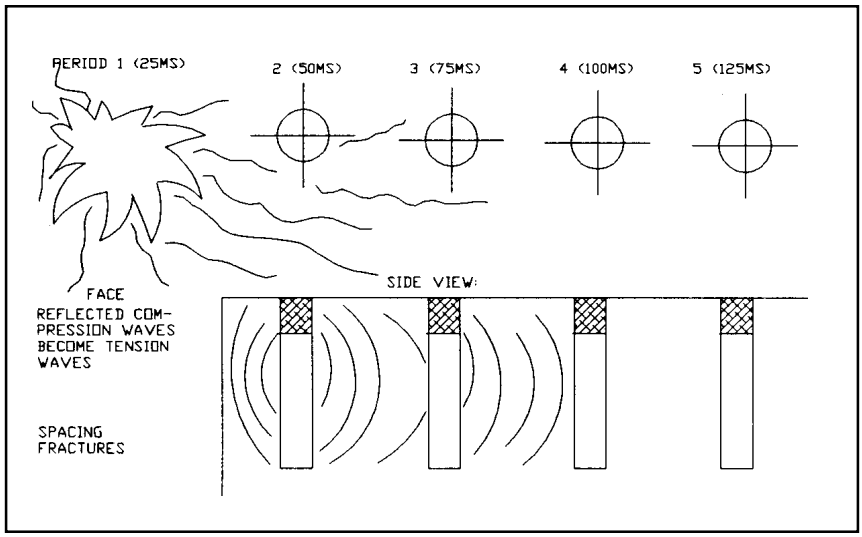

(Figure 9-2) Dead pressing.

The Breaking Face

In order to conduct good ditch line shooting, it is necessary to have a face to break to. In rare instances in excavating, the rock ledge, when encountered, is abrupt enough to be considered the "breaking face." In most cases, it will be necessary to create a breaking face.

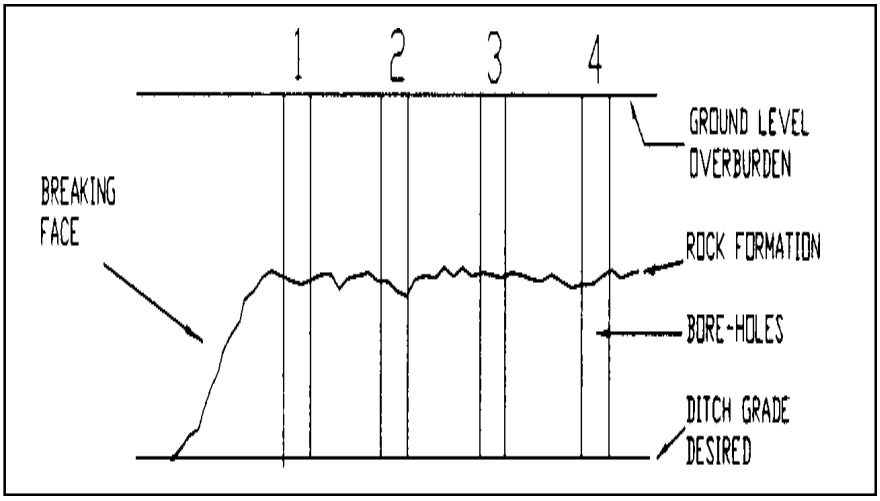

(Fig 9-3) The breaking face.

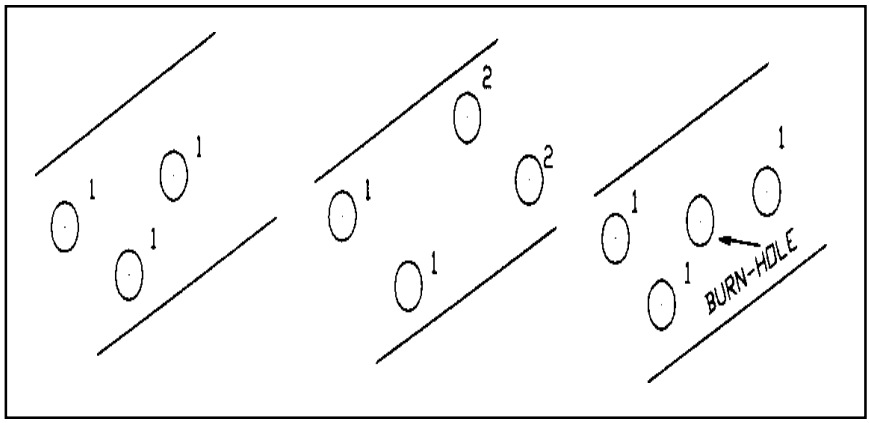

(Figure 9-4) Suggested patterns for creating the breaking face.

If a rock ledge is as much as six feet to the bottom of the borehole, double priming should be considered. Once a breaking face is created, it must be maintained. If a hole is lost in the ditch line, the breaking face may be lost. In almost every case, loss of the breaking face will result in secondary blasting.

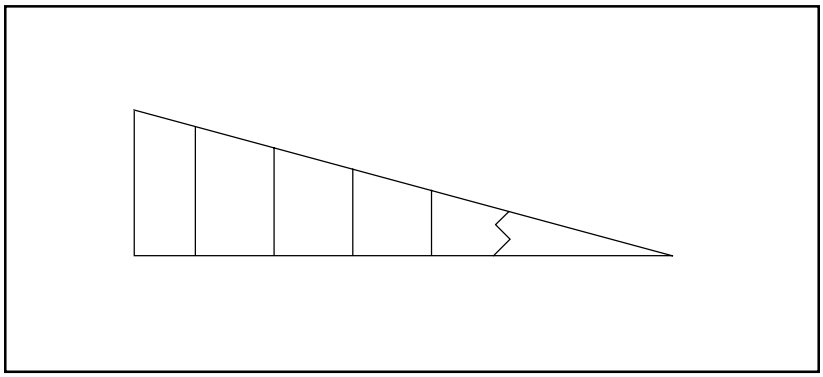

(Figure 9-5) Breaking face on incline.

In order to maintain the breaking face on inclines, it is necessary to create the breaking face at the lowest point in the ditch line.

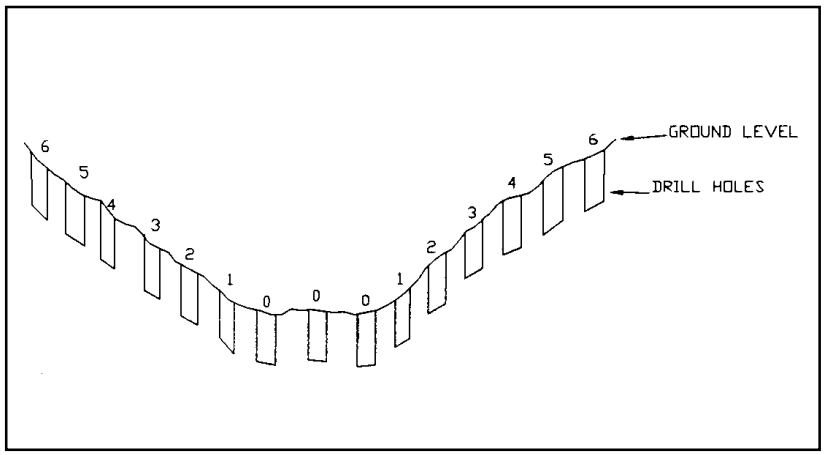

Figure 9-6) Numbers indicate electric blasting cap delay number.

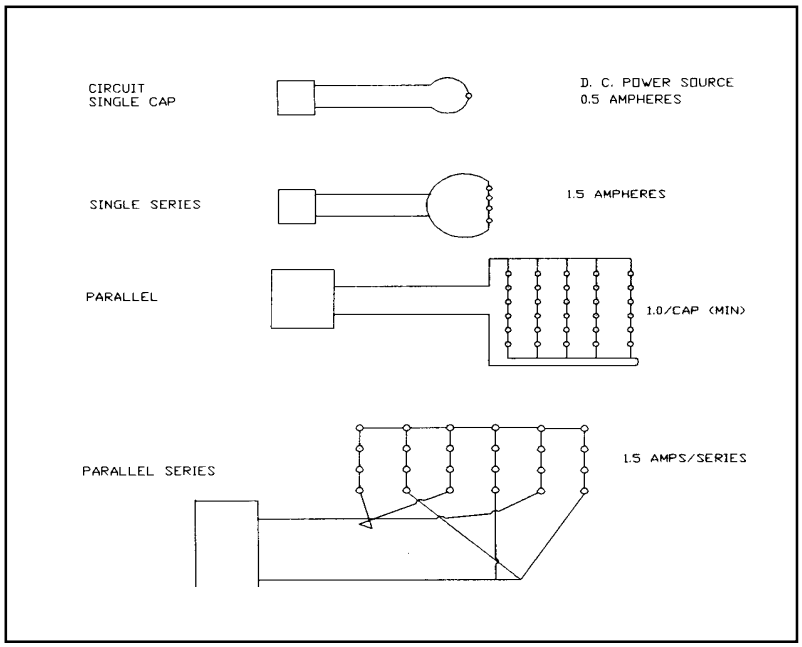

(Figure 9-7) Minimum firing currents.

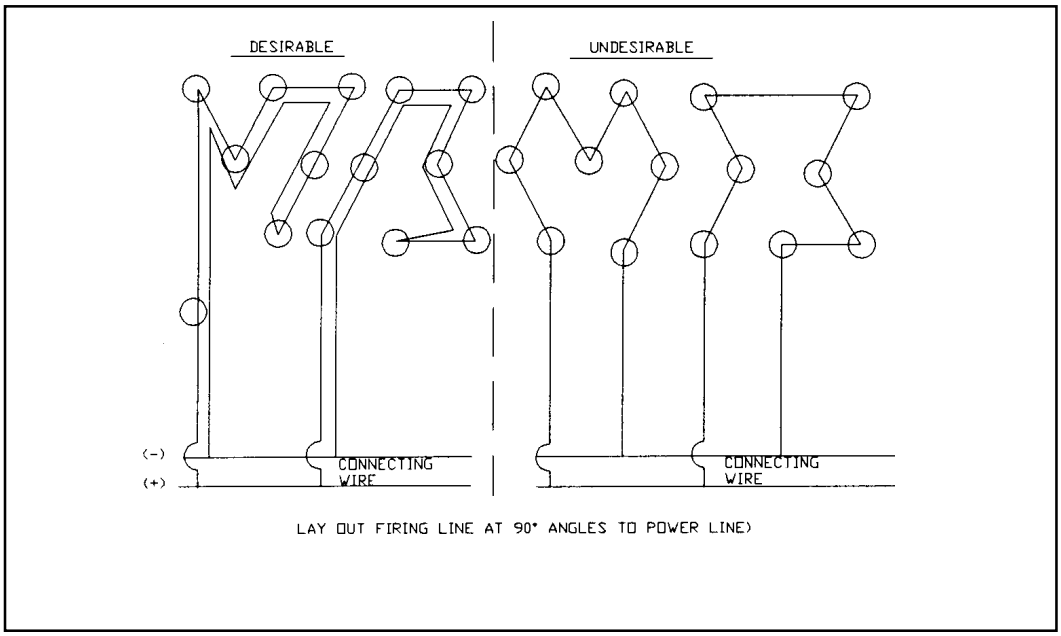

(Figure 9-8) Preferred circuit layout under power lines if inductive coupling is a possibility.

USE OF ELECTRIC BLASTING CAPS IN THE UTILITY AND LIGHT CONSTRUCTION INDUSTRY

Electric blasting caps are more reliable and versatile than any other detonating system on the market today.

Instant E.B.Caps -These caps should be used when delay caps are not needed. They are less expensive than delay caps.

Delay E.B. Caps - Delay caps should be used when:

A. Control of shock energy in the formation is critical.

B. Better rock breakage can be obtained by creating an area in the ditch line or pit for the fractured rock to move to.

Note: It is estimated that it takes 17 milliseconds for the rock to start moving after the explosion occurs in the borehole. For best fragmentation and controlled movement of blasted material, the delay between boreholes should be 18 milliseconds or greater.

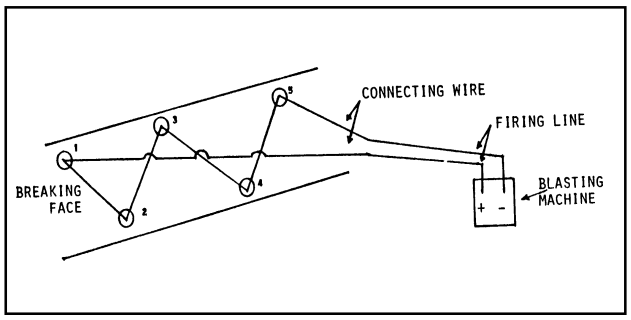

(Figure 9-9) Electric blasting cap series.

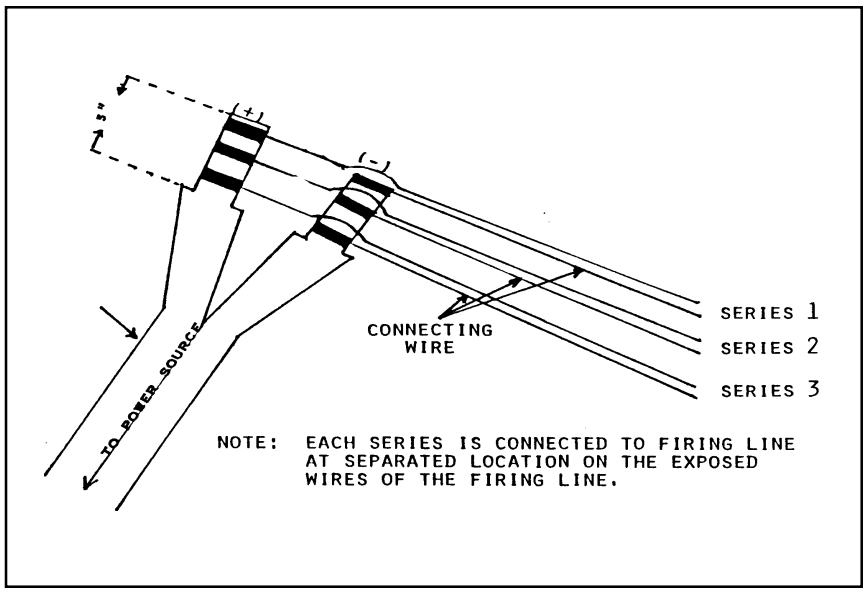

(Figure 9-10) The above diagram shows proper method of attaching connecting wires to a firing line, when two or more series are used.

E.B. Cap Series - Any number of electric caps connected together in a continuous circuit is considered a series. Any time two or more caps are used, they should be wired in series.

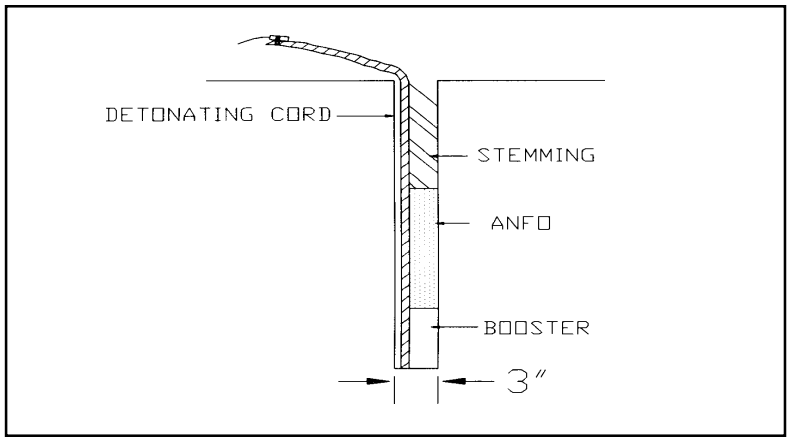

(Figure 9-11) The most common method of loading boreholes with ANFO using detonating cord as the detonator for the booster in 3 1/2" or smaller boreholes.

In the use of delay E.B. Caps with slurries, water gels, and two-component explosives, the use of full or half-second delays is not recommended in trench shooting. Better results and less dead pressing occur when the millisecond delays are used.

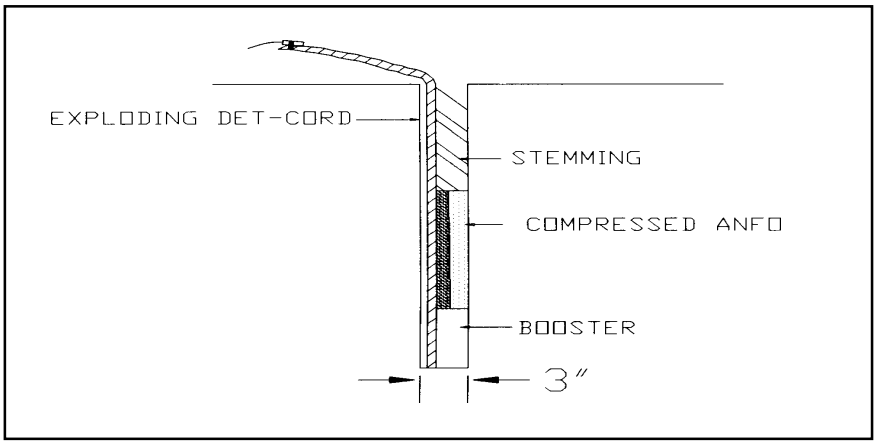

(Fig 9-12) Dead press effect.

"Dead press effect" or burning of the ANFO column when the detonating cord explodes, can cause a loss of as much as three quarters of the total energy in the column.

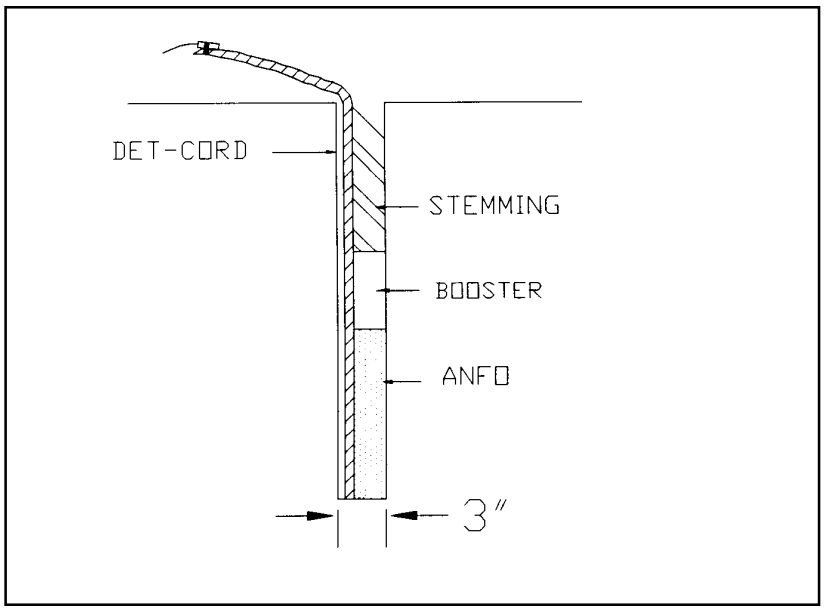

(Figure 9-13) Proper use of detonating cord and ANFO in 3 1/2" or smaller diameter boreholes.

"Dead press effect," or burning of the ANFO column when the detonating cord explodes, can cause a loss of as much as three-quarters of the total energy in the column.

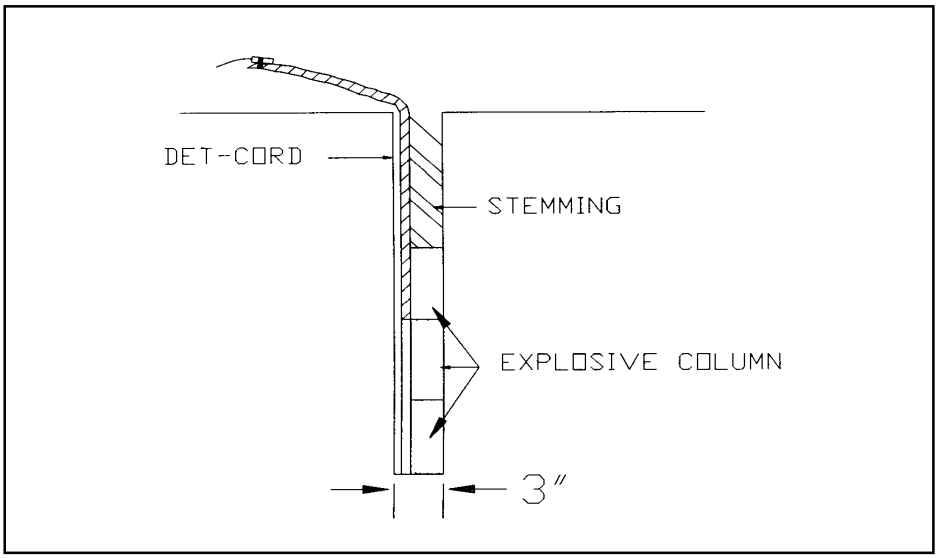

(Figure 9-14) Proper use of detonating cord with water gels or two-component explosives.

USE OF DETONATING CORD IN CONJUNCTION WITH E.B. CAPS IN EXCAVATING OF PITS, LAGOONS, LIFT STATIONS, SWIMMING POOLS, & BASEMENTS

Note: Each number indicates increasing period of delay. Delays used are 25 milliseconds increments.

Examples:
#1 = 25 milliseconds
#2 = 50 milliseconds
#3 = 75 milliseconds

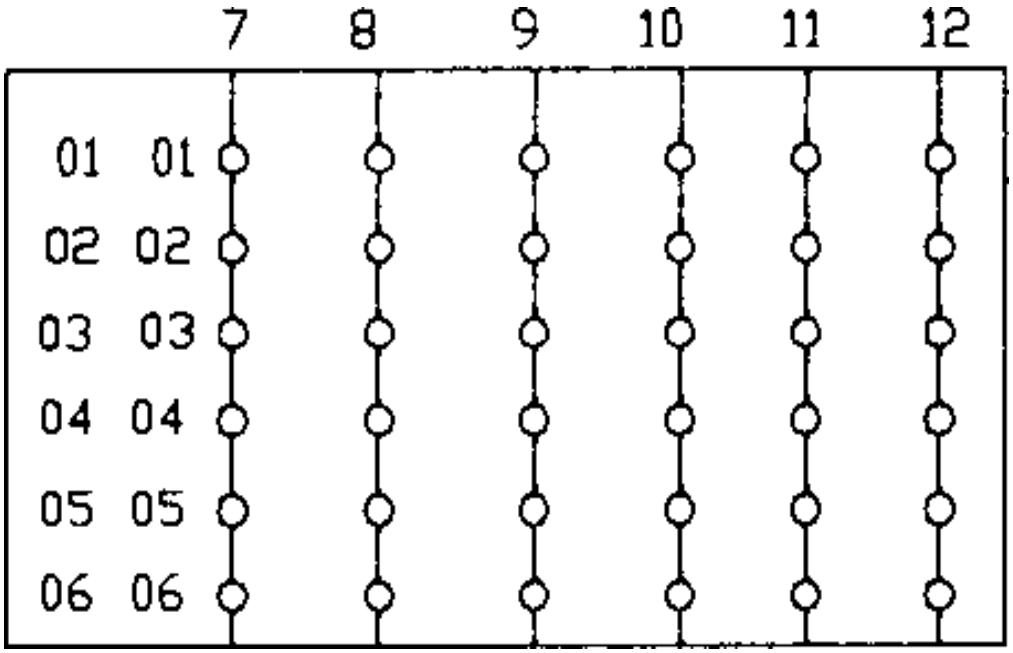

Figure 9-15) Proper use of detonating cord and ANFO in 3 1/2" or smaller diameter boreholes.

Note: The first two rows of holes are delayed to shoot as a ditch line would be shot. The rows of holes after that are delayed to shoot toward the breaking face created by the first two rows.

USE OF DETONATING CORD IN SAVING THE BREAKING FACE IN DITCH-LINE SHOOTING

Note: Each number indicates increasing period of delay. Delays are in 25 milliseconds increments.

Example:
#1 = 25 milliseconds
#2 = 50 milliseconds
#3 = 75 milliseconds

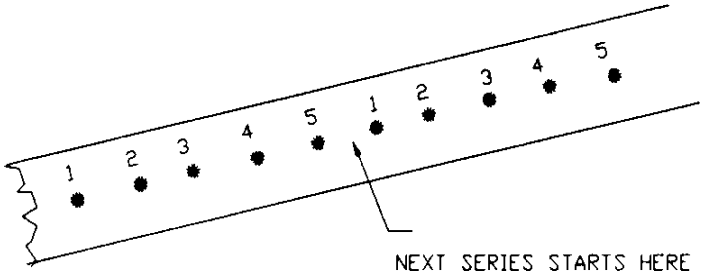

Load the first hole in the next series with the explosive charge desired, using detonating cord as the detonating device for the column. Leave plenty of slack in the cord all the way to the top of the hole. Do not stem at this point. Detonate the first series. The first hole in the next series is already loaded, stem if possible, attach correct delay cap and proceed to load next holes as usual.

THE RELATIONSHIP OF BOOSTERING AMMONIUM NITRATE FUEL OIL MIXTURE TO DETONATION VELOCITY

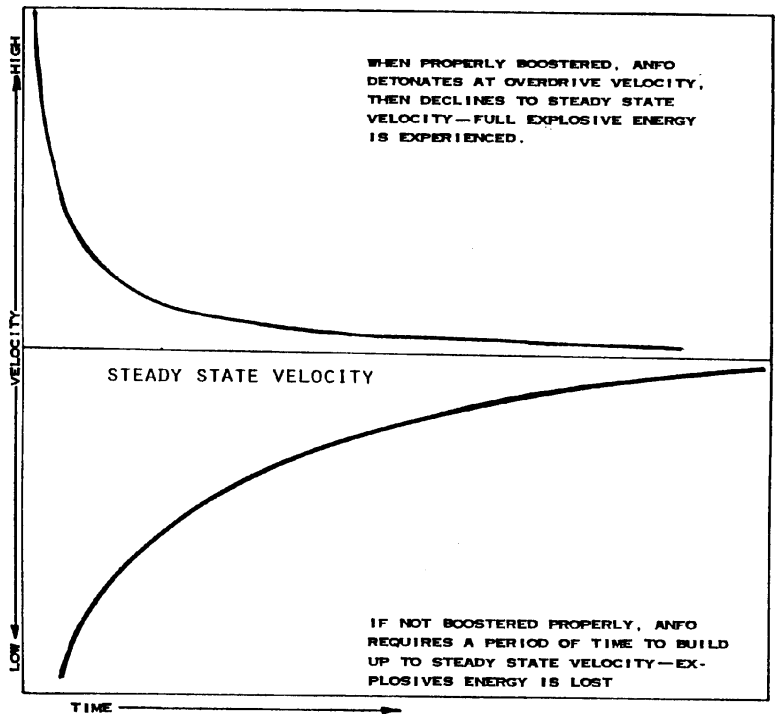

(Figure 9-16) Proper use of detonating cord with water gels or two-component explosives.

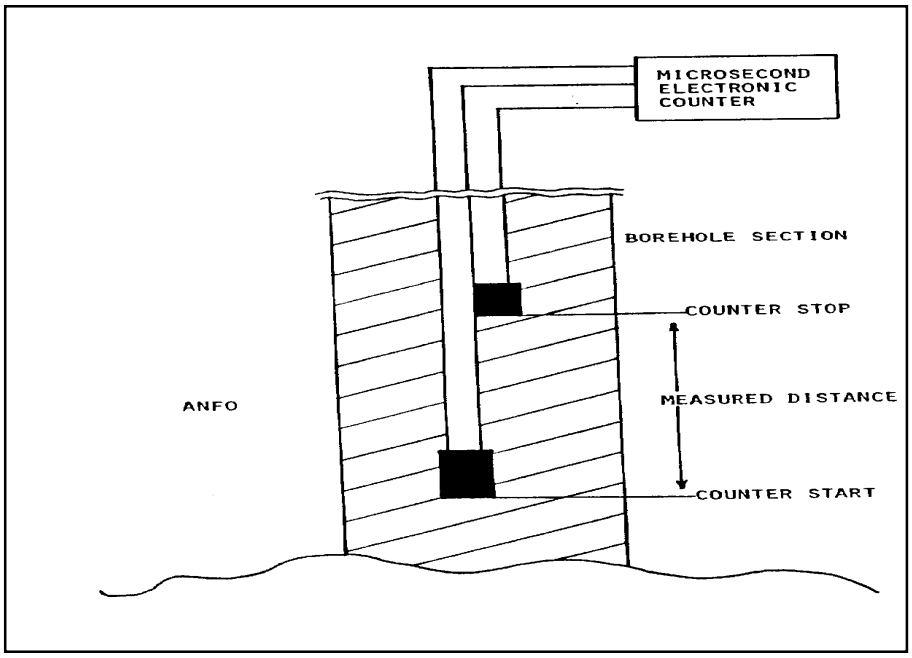

(Figure 9-17) Borehole Velocity Measurement System.

(Figure 9-16) Borehole Velocity Measurement System.

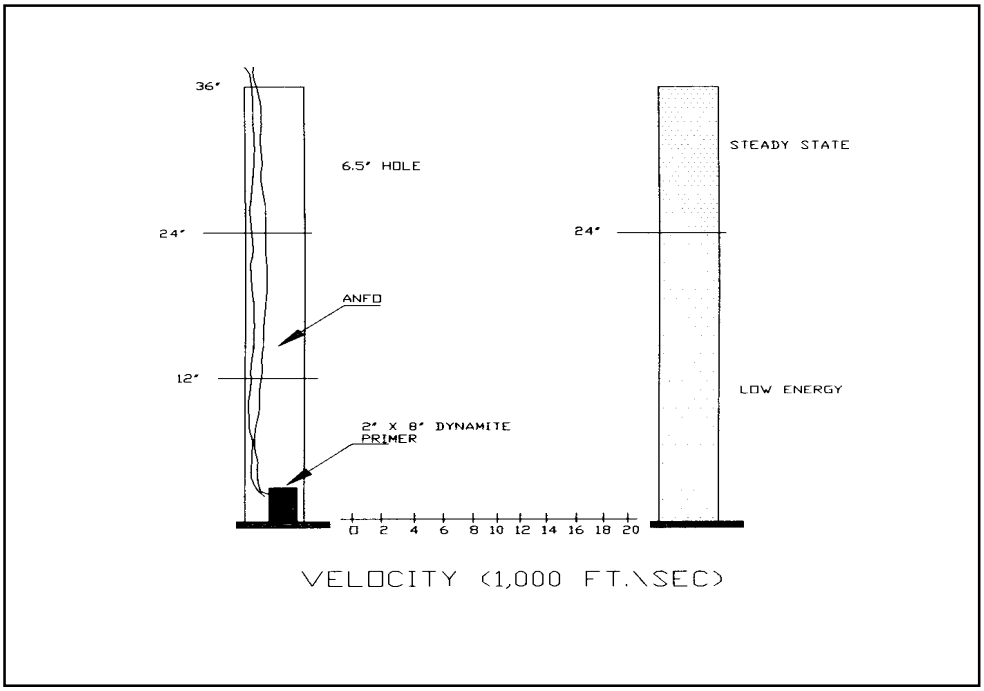

(Figure 9-18) Inefficient priming.

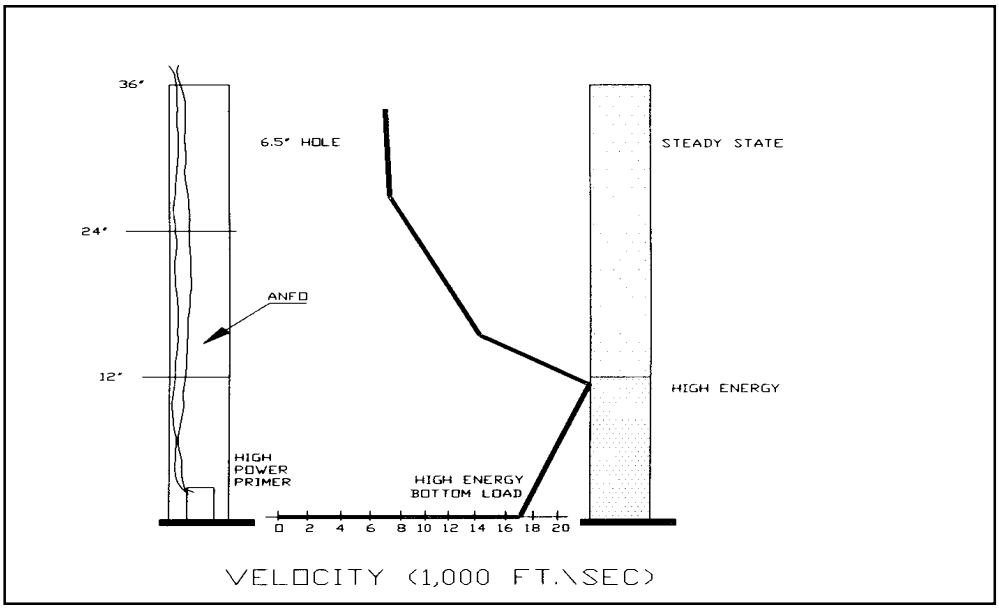

(Figure 9-19) Good priming.

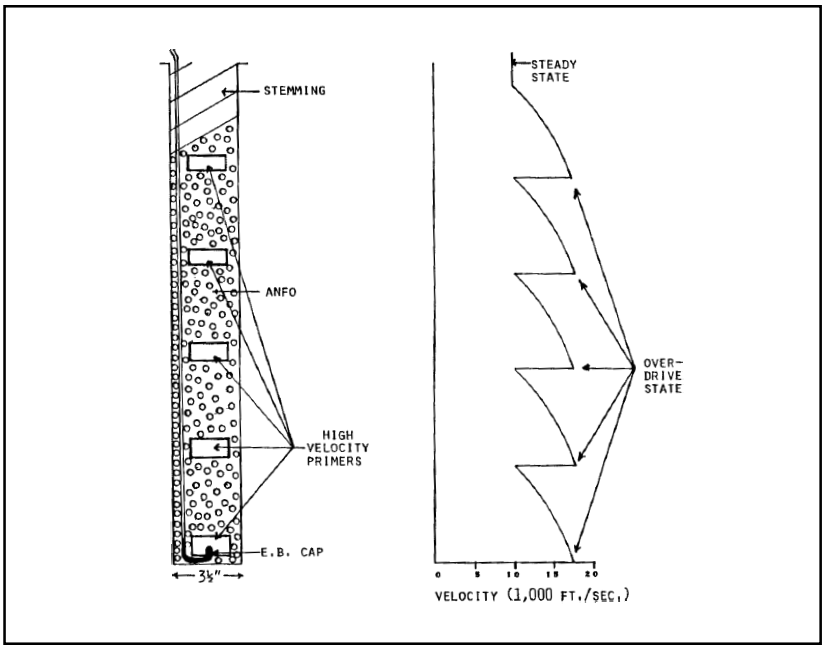

(Figure 9-20) Overdrive effect from good priming in 3 1/2" dry hole.

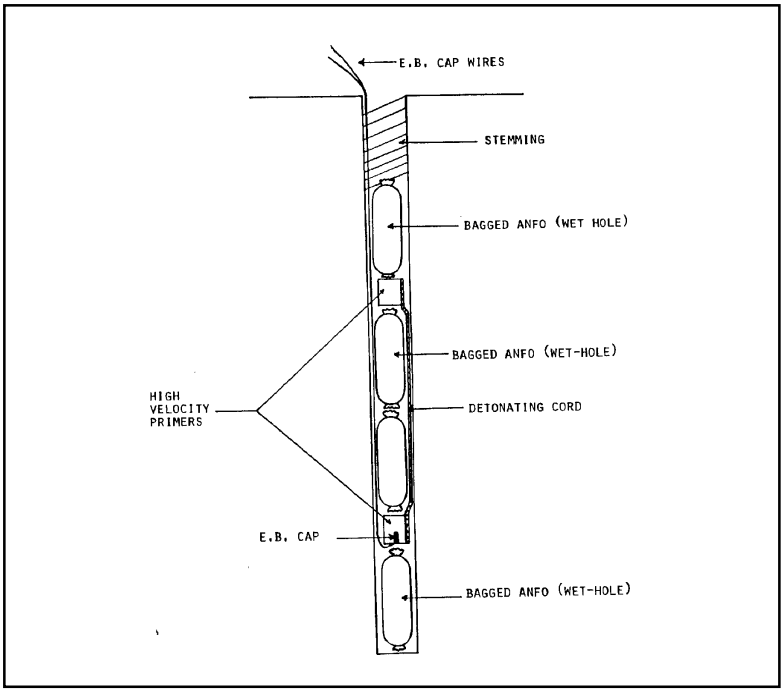

(Figure 9-21) Good loading procedure for bagged ANFO (wet hole) 4 1/2" diameter or greater.

Due to the time required for an explosive to become effective and build up pressures in the borehole, it is necessary to subdrill past the desired grade. The distance to consider for overdrilling is dependent on the rock formation and the velocity of the explosive to be used.

For best production results, the driller should be three to four hundred feet ahead of the blaster at all times. It is up to the blaster to keep his "breaking face" open by not losing any holes. The diagram below shows the correct and incorrect drilling practices:

USE OF AMMONIUM NITRATE FUEL OIL IN THE UTILITY AND LIGHT CONSTRUCTION INDUSTRY

These industries normally use drilling equipment that does not lend itself to the use of ANFO (3 1/2" diameter holes or smaller). ANFO used in these diameters will not achieve velocities high enough to do an effective job of fracturing the rock formation. It is possible to overdrive the ANFO as explained before, but this can be very expensive.

If the diameter of the borehole exceeds the diameter of the explosive by more than one-half inch, borehole coupling can be achieved very effectively by filling in the air space around the ANFO with stemming.

CAUTION: ANFO has more gas energy (heave) than any other explosive. This very often results in more flyrock and less control of desired dimensions in tight shooting conditions.

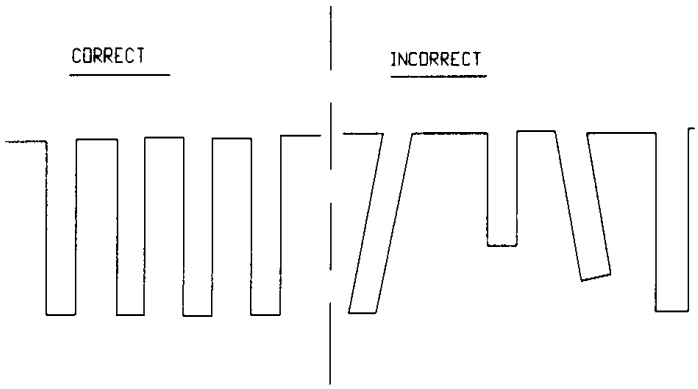

The driller's responsibility is to:
A. Maintain exact distances between holes.
B. Keep hole depth uniform.
C. Keep holes vertical to one another.
D. Notify blaster of changes in drilling, overburden, rock depth, lost holes, etc.
E. Cover the drilled holes.

USED CONVEYOR BELTING BLASTING MATS

This mat consists of three parts:
1. The center mat is without chains.
2. The two outer mats have short pieces of chain bolted to them.
3. The mat should be placed over the area to be protected in the following manner:

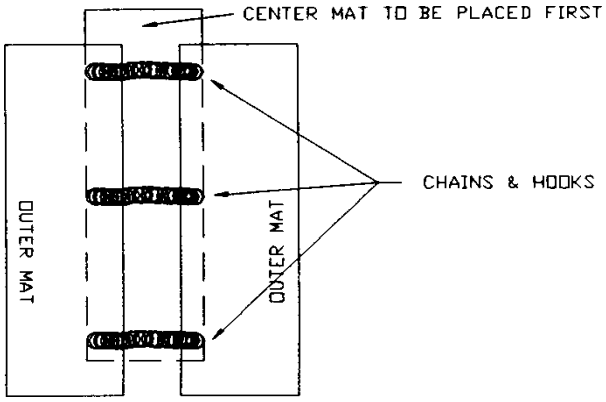

TRENCHING (TRACK DRILL)

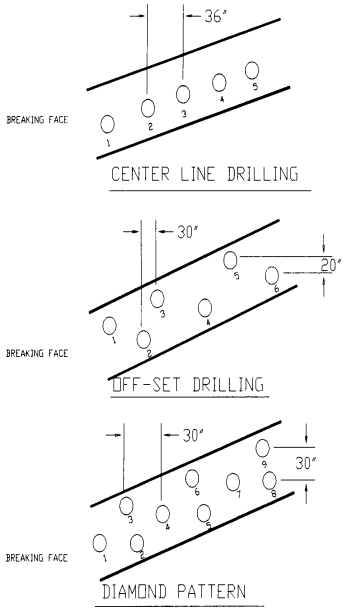

24" ditch width, 0"-48" grade depth (drill hole depth = grade + 12")

24"-36" ditch width, 48" - 144" grade depth (drill hole depth = grade + 18")

36-48" ditch width, 48"- 144" grade depth (drill hole

Note: This is an exceptionally good low density rock formation pattern.

Note: Maximum fragmentation of rock is achieved when holes are laid out and fired in a triangle. The converging shock waves from the configuration can often allow the use of less explosives in each hole.

When adjusting all patterns to meet your needs, spread or close drill patterns in six-inch increments until desired results are achieved.

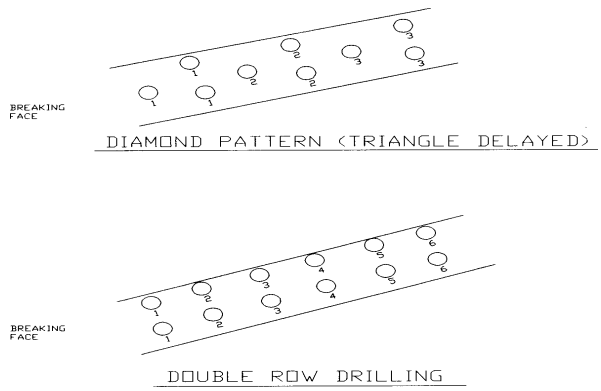

DOUBLE PRIMING

Double priming should be considered when the solid rock in a borehole depth is eight feet or more, or there is a mud or earth seam in a formation of four inches or more.

Allow for a minimum of 10 inches stemming below and above the mud seam before placing the top charge.

The necessity of double priming will depend on the thickness and density of the rock, as well as the continuity of the formation. In many formations, the heave energy will lift and fragment the upper layers of the formation without double priming.

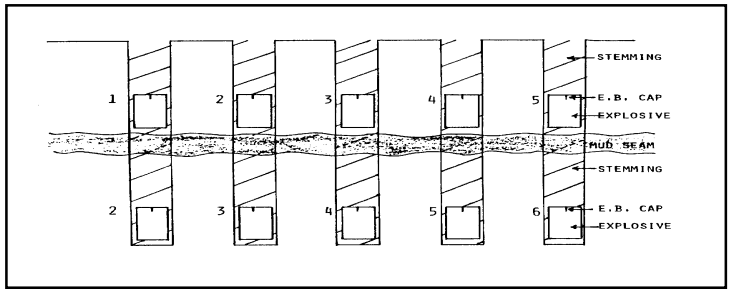

(Figure 9-22) Double priming. Numbers indicate electric blasting cap delay period.

This mat should always be used with a minimum of eight inches of overburden between the top of the rock and the blasting mat.

Note: When connecting the chain of the outer mats across the center mat, do not leave any slack in the chain.

TRENCH SHOOTING (HAND-HELD ROCK DRILL)

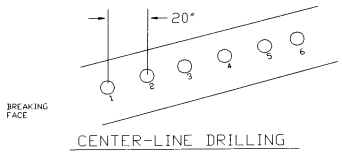

12"-18" ditch width (drill hole depth = grade + 12") This type of shooting involves the use of small diameter explosives (1"-1 7/8" diameter).

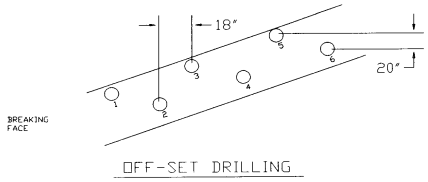

18"-24" ditch width (drill hole depth = grade + 12")

When using a hand-held rock drill, it is best to drill no deeper than four feet at a time. Manpower efficiency decreases, and drill steel hang-ups increase dramatically past this depth. It is more economical to drill the four feet, shoot, clean out, and drill again if greater depth is needed.

PIT SHOOTING

The breaking face is created at the bottom of the Diagram A by shooting the first two rows as a trench line is shot. The balance of the holes are delayed to move toward the created breaking face one row at a time.

This diagram is for track drill, using a 2 1/2" drill bit, 3-foot spacing between holes, 2" diameter explosive, and 1-12 milliseconds delay periods.

The breaking face in Diagram B is created in the center line, moving toward the bottom of the diagram with the sides folding into center on different delays.

This diagram is for track drill using 2 1/2" drill bit, 3-foot spacing between holes, 2" diameter explosive, and 1-12 milliseconds delay periods.

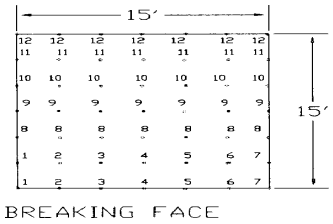

Diagram A

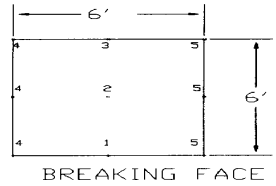

Diagram B

POLE HOLE SHOOTING

Drill a single hole two feet deep where the pole will be set. Use one stick of powder (1 1/4" x 8") with cap inserted to shoot toward the bottom of the hole and clean out. Drill two holes 10 inches apart, two feet deep. Shoot and clean out. Repeat until desired depth is reached. Depending on the density of the rock, you may use any amount from one-half of a stick to a full stick in each hole.

A center hole is drilled, but not loaded, creating a breaking face in the pattern. This pattern is utilized when using hand-held rock drills or track drills where rock formation demands are tough.

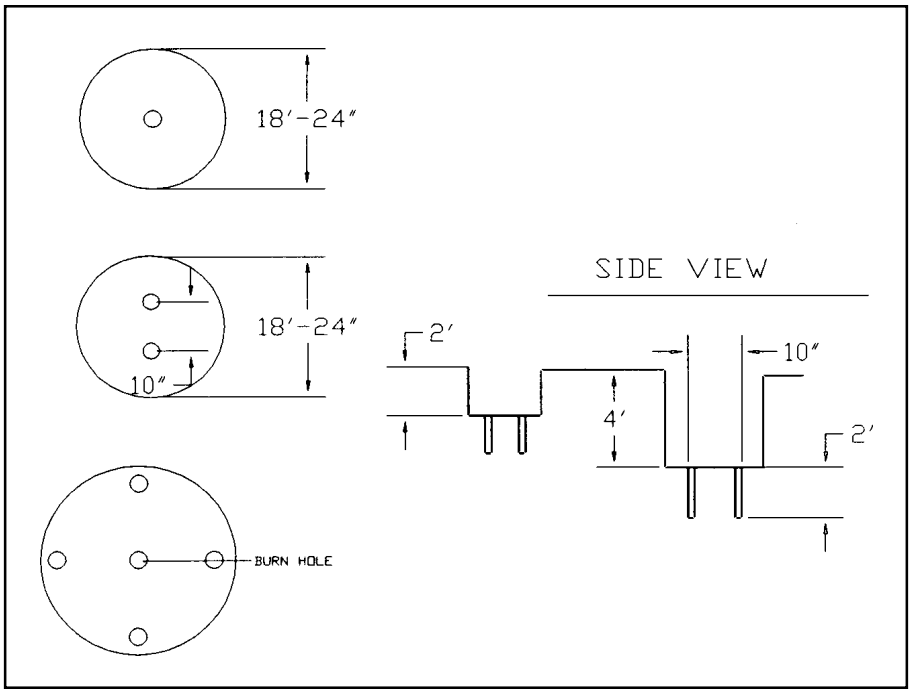

(Figure 9-23) Pole hole shooting

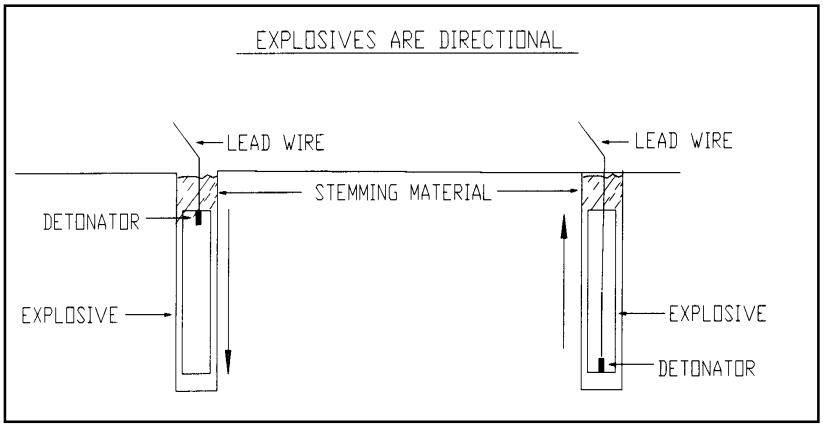

(Figure 9-24) Directional action of explosives.

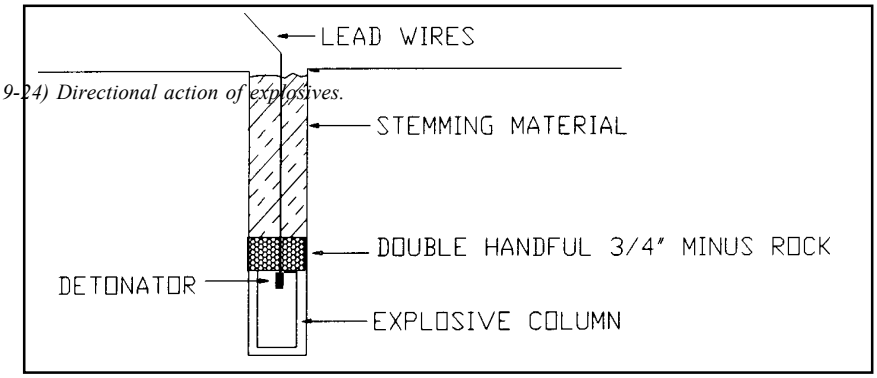

(Figure 9-25) Single hole configuration in pole hole shooting.

BOULDER BREAKING

It is possible to break rock with the shock energy of an explosive without drilling any holes in the rock if the approximate size of the rock is known.

Example: Assume that you need to break a 3-cubic-yard rock (boulder). By using three 1-pound explosive pouches placed as in the following drawing, you can break the rock with the shock energy created by the explosive, in most cases. Very little, if any, flyrock occurs when breaking rock in this manner (shock energy does not throw rock).

Normally, one 1-pound explosive pouch is required per each cubic yard of rock to be blasted. It is possible in many cases to reduce this amount if the blaster wants to take the time to 'dobe' the explosive. This

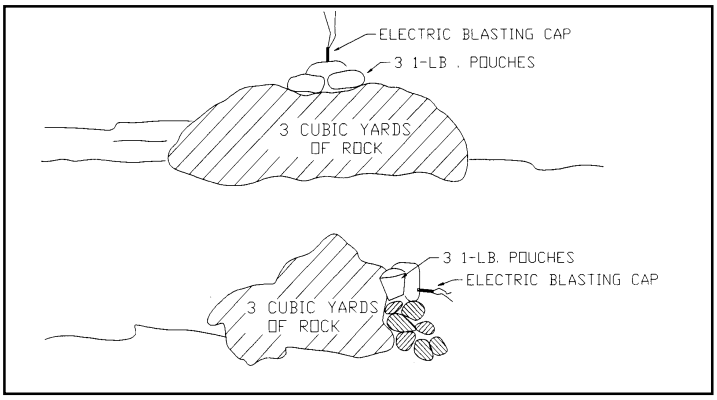

(Figure 9-26) Boulder breaking. The blasting cap must always be pointed toward the intended direction of the shock energy.

Normally, one 1-pound explosive pouch is required per each cubic yard of rock to be blasted. It is possible in many cases to reduce this amount if the blaster wants to take the time to "dobe" the explosive.

This same principle can be applied to remove small outcroppings of rock in ditch lines, etc., with reasonable success. However, this method is not recommended in solid ledge rock because the shock wave exits but does not return, resulting in very little or no breakage. This method of breaking rock is extremely noisy and should not be done if blasting noise disturbs neighbors in the area where blasting is being considered.

Regardless of where the explosive is placed, if the blasting cap is pointed in the direction of the rock to be blasted, the shock energy in the explosive will be absorbed by the rock. Shock energy will not leave the rock that it enters. If there is a crack in the rock, the shock energy will not exit the crack.

It is important that the explosive maintain intimate contact with the rock. This is the reason the one-pound pouch is in a flexible package, allowing the explosive to conform to blasting surface.

CONVERGING SHOCK WAVE BLASTING PRINCIPLE

This pouch layout can produce extreme pressures within the rock because the converging shock waves meet in the center of the triangle, increasing shock wave intensity many times. This allows larger rocks to be broken with less explosives. All caps should detonate at the same time. The triangle can be different sizes, but should form as close to a perfect triangle as possible. Sometimes it is best to separate the explosive charge over the surface of a rock. Detonation should occur simultaneously in each of the charges, injecting the shock wave throughout the rock at the same time.

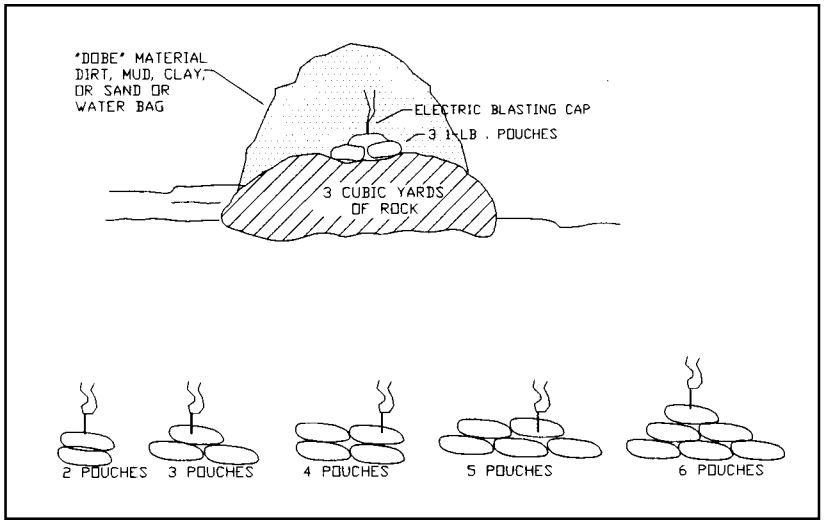

(Figure 9-27) Boulder breaking. The blasting cap must always be pointed toward the intended direction of the shock energy. At bottom are suggested powder stackings for various amounts of 1-pound explosive pouches that allow the greatest penetration of shock energy to rock.

STUMP SHOOTING

The most important thing to remember about shooting stumps is that the explosive must be placed <u>under</u> the stump. The prescribed method is to punch holes under the stump at an angle, toward the center of the stump. The depth of these holes depends on the width of the stump. A 24- to 30-inch-deep hole will suffice for most stumps 5 inches to 18 inches in diameter. A stump 10 inches or more in diameter may require two or more holes. The powder used should be 1/2 pound to every 5 inches of diameter.

<u>Example</u>: A 15-inch-wide stump can usually be lifted out of the ground with 1 1/2 pounds of explosives.

In large diameter stump shooting (three feet or more), it is sometimes necessary to "spring" a hole, or punch it, as deep as possible toward the center of the stump. Place a 1/2 pound charge in the hole and detonate. This usually results in blowing a cavity beneath the stump. Let the hole cool, then clean it out and place the amount of explosive required (using powder factor mentioned in previous paragraph). Fill the cavity back in and detonate.

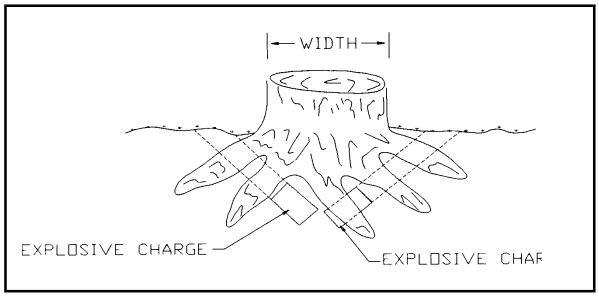

(Figure 9-28) Separation of explosive charges over rock.

When shooting two or more holes, make sure that both holes go off at the *same* time. Electric blasting works best.

Again, it is recommended that the stump is protected with a cover of some kind to prevent pieces of rock or stump from flying into the air. Removal of live tree stumps may require more explosive than a tree stump that has been dead for any length of time. An explosive with good heave energy is best for this type of work. Binary explosives have more heave energy than dynamite.

HAZARD TREE FELLING WITH EXPLOSIVES

Felling hazard trees with explosives is often safer than felling with a power saw because personnel are at a safe distance from the tree when the danger is highest. General blasters and fireline explosives

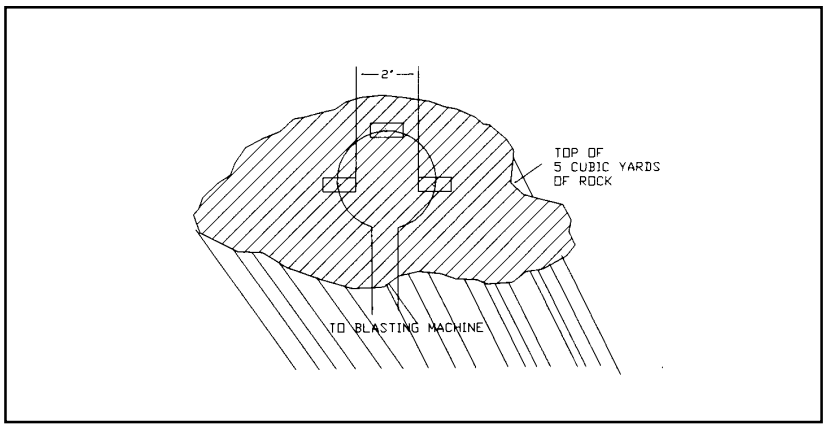

(Figure 9-29) Large diameter stump shooting with holes punched toward center of stump.

blasters can be certified by National Park Service blaster examiners to conduct hazard tree blasting. All hazard trees must be assessed before they are felled. Extreme care is essential where trees are rotten, weak, on fire, or have significant lean. Always approach a hazard tree away from the lean. When assessing a hazard tree to be felled, determine the following:

1. Is the tree green, dead, hollow, and/or rotten?

A dead, hollow tree will require that explosives be spread across the face to avoid blowing a hole in the center and leaving the tree standing. A live, solid green tree may take slightly more explosives concentrated in one location and shaped in a pyramid to develop an appropriate shock wave. Look for conks, broken tops, basal scars, cat faces, numerous downed limbs, etc., that may indicate rot. Also, look to see if numerous trees are down in an area. This may indicate a pocket of trees with rot.

2. Is the tree burning?

Fire burning in a tree may indicate rot, which results in a weakened tree. If the tree is burning in the top, use only water gel, emulsion, or PETN-based explosives or explosives approved for fireline explosive construction (FLE). If the tree is burning at the base, STOP! Do not use explosives if there is a probability that they will catch fire!

Explosives that are on fire must not be touched! Do not attempt to extinguish explosives that are on fire! Also, if the tree may fall across burn control lines, special precautions may need to be taken.

3. Determine the tree diameter where the explosives will be placed (generally at chest height).

4. Determine whether external or internal blasting methods should be used.

a. The term *internal* indicates that a hole will be drilled in the tree for the explosives charge (Figure 9-28). This method [illegible] are so hazardous that the activity might [illegible]

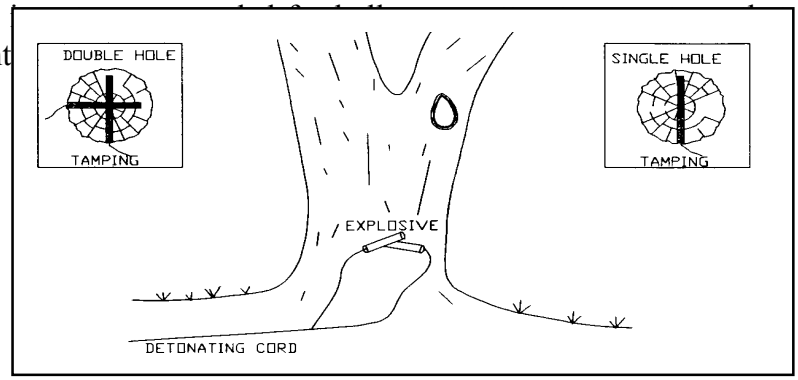

(Figure 9-30) Large diameter stump shooting with holes punched toward center of stump.

b. The term *external* indicates that the explosives will be placed on the outside of the tree in one location or by wrapping the tree with linear type fireline explosives. Wrapping is the least preferred method of hazard tree blasting because the direction of the fall is left to chance. Also, not enough explosives will be used when a large tree is single wrapped, which will leave the tree standing and weakened.

Internal Hazard Tree Felling

Internal hazard tree blasting is often preferable to external because less explosive is needed and shock wave and noise are reduced. However, direction of fall is unpredictable and the tree must be disturbed to drill a hole for the explosives.

The formula used for internal hazard tree felling with explosives is:

$W = D/250$ (Metric Equivalent: $W = D/3560$)

W = Weight of the explosives in pounds (Metric Equivalent: kilograms)

D = Diameter of the tree in inches, where the explosives will be placed. (Metric Equivalent: centimeters).

Example: Tree Diameter = 24 inches (Metric Equivalent: 61 centimeters)

$$W = (24^2)/250 = 576/250 = 2.3 \text{ pounds}$$

(Metric Equivalent: $(61^2)/3560 = 1.04$ kg)

When using explosives that are supplied in one-pound sticks, place three sticks (always round up). Using explosives supplied in 0.5 kg sticks, place two sticks. With packaged emulsions or water gels that can be extruded into the borehole, use two to three pounds (1kg).

Using a 1.25-inch linear water gel explosive (fireline), divide 2.3 pounds by 0.6 pounds per foot = 3.83 feet (1.17 meters). Round up and use 4 feet (1.2 meters) of linear FLE explosives.

Once the hazard tree has been loaded with explosives, the procedures for detonation are the same as for fireline explosives. Use exploding bridgewire detonators, the customary 500 feet (152 meters) of shot line for distance requirements, and place appropriate guards. (See special considerations at the end of this section.)

External Hazard Tree Felling

External hazard tree felling is a preferred method because the blaster has a high degree of control over which way the tree will fall. However, air blast will be higher for this method than in the internal method, and it is often difficult to place large amounts of bulk explosives in one location on a tree. An exception is where packaged explosives can be removed or extruded from the container, shaped, and then stuck to the surface of the tree.

The formula used for external hazard tree blasting is:

$W = D/40$ (Metric equivalent: $W = D/569$)

W = Weight of explosives in pounds(Metric equivalent: kilograms)

D = Diameter of the tree in inches, where the explosives will be placed. (Metric Equivalent: centimeters)

Example: Diameter of the tree is 24 inches (Metric equivalent: 62 centimeters)

W = (24)/40 = 576/40 = 14.4 pounds
(Metric equivalent: (61)/569 = 6.54 kg)

When using explosives supplied in 1-pound sticks, place 15 sticks concentrated in one location (always round up). Using explosives supplied in 0.5 kg sticks, place 13 sticks. When using explosives that can be extruded from the package, place 14.4 pounds (6.54 kg).

Using 1.25-inch linear water gel fireline (FLE) explosives at 0.6 pounds per foot, use 14.4/0.6 = 24 feet (7.3 meters) of linear fireline explosives concentrated in one location.

NOTE: If the tree is wrapped with the linear explosives (FLE), the quantity becomes *n* x (24/12) = 6.3 feet (2 meters). This is a significantly smaller quantity than predictably needed, and it would therefore require at least six wraps to ensure that the tree would fall. Therefore, for every 4 inches (37 cm) in diameter, wrap the tree once with fireline (FLE) explosive.

Special Considerations

1. Place the detonator or det cord on the top of the pyramid of explosives to develop appropriate shock waves to fell the tree.
2. Where bark is unusually thick or loose, it should be removed from the tree before placement of the explosives. CAUTION: this may not be safe practice on some trees.

Tree Diameter (D) Inches	Tree Circumfrence (πD) Inches	Internal Load ($D^2/250$) lbs	External Load ($D^2/40$) lbs	External Load # 1 lb Sticks	External Feet of FLE in One Location	External Feet of FLE Wraps	= Feet
8	25.0	0.27	1.6	2	3	2	= 4
12	37.7	0.60	3.6	4	6	3	= 9.5
16	50.3	1.07	6.4	7	11	4	= 17
20	62.8	1.67	10.0	10	17	5	= 26
24	75.3	2.40	14.4	15	24	6	= 38
28	88.0	3.26	19.6	20	33	* 7	= 52
32	100.5	4.27	25.6	26	43	* 8	= 67
36	113.1	5.40	32.4	33	54	* 9	= 85
40	125.6	6.67	40.0	40	67	* 10	= 104
44	138.2	8.07	48.4	49	81	* 11	= 127
48	150.8	9.60	57.6	58	96	* 12	= 151

* Not Recommended.

(Figure 9-31) Tree diameter and respective explosives loads.

3. Always place the explosives on the "direction of fall" side of the tree unless the danger warrants otherwise. Never assume that a tree will fall in a given direction.
4. Assume that all blasts will produce flying debris.
5. Always adhere to the 500-foot (152-meter) distance rule.
6. Always use a detonation system that is not susceptible to the hazards of electromagnetic radiation (EBWs or nonel).
7. Use extreme care around hollow rotten trees. Spread explosives across the face of the tree to avoid blowing a hole through the center, which could leave the tree standing and extremely dangerous to approach the second time.
8. When in doubt, use more explosives than the formulas indicate, especially when wrapping large trees with linear fireline explosives.

9. Always follow the rules and practices given in the *Guide for Using, Storing, and Transporting Explosives and Blasting Materials* and on the instruction sheet in every box of explosives.

10. Take special precautions where burning trees may fall across burn control lines.

POST HOLE SHOOTING

Drill a single hole, 24" to 30" deep, large enough in which to fit the explosive. Place the cap in the explosive charge where, when inserted in the hole, the cap points toward the bottom of the hole. In hardpan or seamy rock formations, usually one-half of a stick of a good binary explosive will accomplish the task. In solid rock, one full stick is necessary.

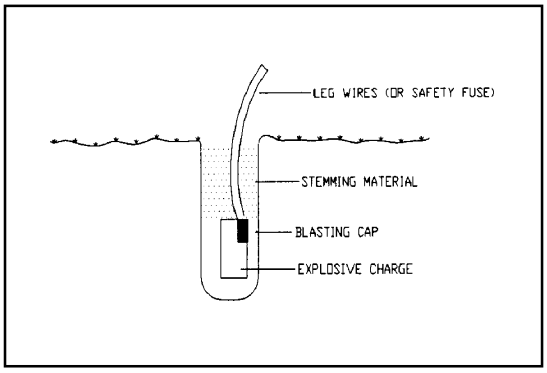

(Figure 9-31) TPost hole shooting.

Drilling Holes

In rock formations, a hand-held rock drill is required. This equipment can be rented at most equipment rental stores. In hardpan or hard-packed ground, a digging bar or hand auger will usually be the cheapest and best way to punch a hole.

In many cases, fences are built close to dwellings, roads, etc. It is always advisable to cover a shot with some kind of material. Used conveyor belting, old bed springs, chain link fence, two feet of dirt, plywood, old tires, etc., make reasonably good blasting mats for this type of shooting.

Chapter 10
GENERAL BLASTING

BLASTING MATS

Blasting mats are heavy mats of steel rope, rubber, or heavy rope. The mats are placed over the loaded holes just before firing to contain the blast and help prevent flyrock. The size of the mats depend on the needs of the blaster. If the blasting mats are to cover light charges of explosives, they may be spread directly over the boreholes. If heavier charges are used, railroad ties or logs are commonly put down first and then the mat is placed over them.

Steel mats are very heavy and are commonly used on small jobs, or jobs where there is special handling equipment. If steel mats are used, care should be taken to keep them from touching the connections of the blasting circuit. Such contact may cause a short or break in the blasting circuit. Matting and the use of backfill is required by law where there is a chance of flyrock.

An unconnected layer of old tires or plywood sheets or mattresses is NOT a mat!

SEQUENTIAL BLASTING

Small, primary blasts tend to slow production in the surface mining industry. As a result, a demand exists for a technique to enable the blaster in the field to increase shot size while staying within the scaled distance limits. Previously discussed were the various types of delay systems and delay electric blasting caps, one of the more commonly used devices for achieving better fragmentation. Unlike fragmentation achieved by simultaneously detonating charges, delay systems and caps enable an increase in the size of primary shots by taking advantage of the many delay periods available on the market today.

One disadvantage for the blaster who finds large primary shots a desirable and necessary part of a project is that delay periods in caps are limited. (Before deciding upon the size of each blast, one should consult an

explosive dealer regarding which periods are available.) And, depending upon the area in which the blasting is taking place, the larger shots could cause excessive noise and ground vibration, resulting in complaints from residents. Needless to say, a limited number of delay periods are available, and a congested blasting area can prevent enlarged shots.

An alternative in electric blasting is the sequential blasting machine. Unlike the more conventional type capacitor discharge machines, the sequential machine delivers electronically timed bursts of energy to a number of conductors, or lead wires. By making careful selection of delay periods, the amount of explosive pounds per delay detonating may be increased to a significant degree. Also, it is possible to increase the size of a shot by using one of these instruments.

Figure 10-1 illustrates a typical primary blast consisting of two series wired in a parallel circuit. A limited number of delay periods may force the blaster to arrange his delays as in this diagram. When detonated, this arrangement causes each row to move toward the open face simultaneously. Any attempt to arrange this shot in a "V" cut pattern could force the blaster to overuse the last delay period in the rear of the shot. If the explosive pounds per delay interval limit is achieved, then this shot reaches maximum size. And, in this particular example, when using a capacitance discharge blasting machine (which will deliver one burst of electrical energy upon command), the delay periods used will determine the delaying sequence of each charge.

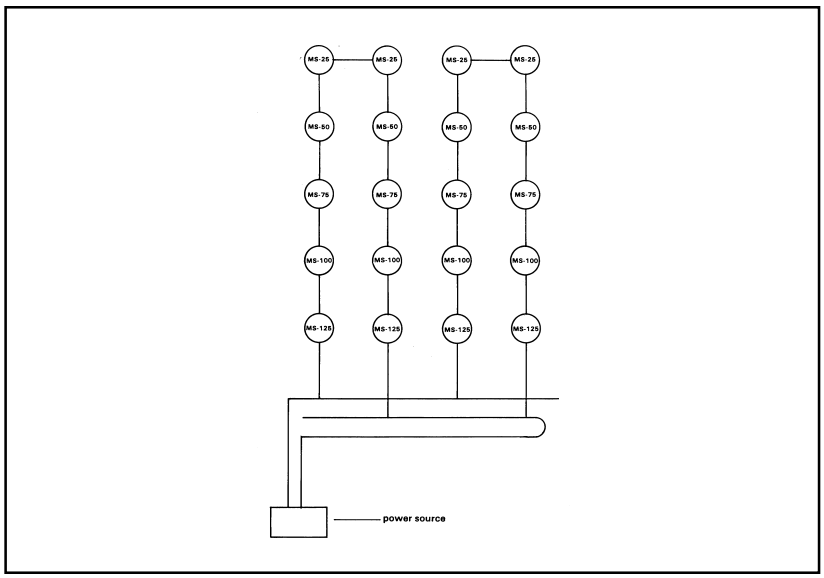

(Figure 10-1) Sequential blasting machine operation.

By using the sequential blasting machine shown in Figure 10-2, one may detect a slight difference. Four series of caps are connected to the firing cable of the machine which delivers bursts of energy at 25 milliseconds intervals. Since the delay period separates each row by 100 milliseconds, the current passing through the firing cable at 25 millisecond intervals allows each hole to detonate individually. The amount of explosive pounds detonating per delay interval is reduced to a fourth of the amount detonating in the Figure 10-1. The shot size may be increased providing there is sufficient distance between the nearest home and the blasting site.

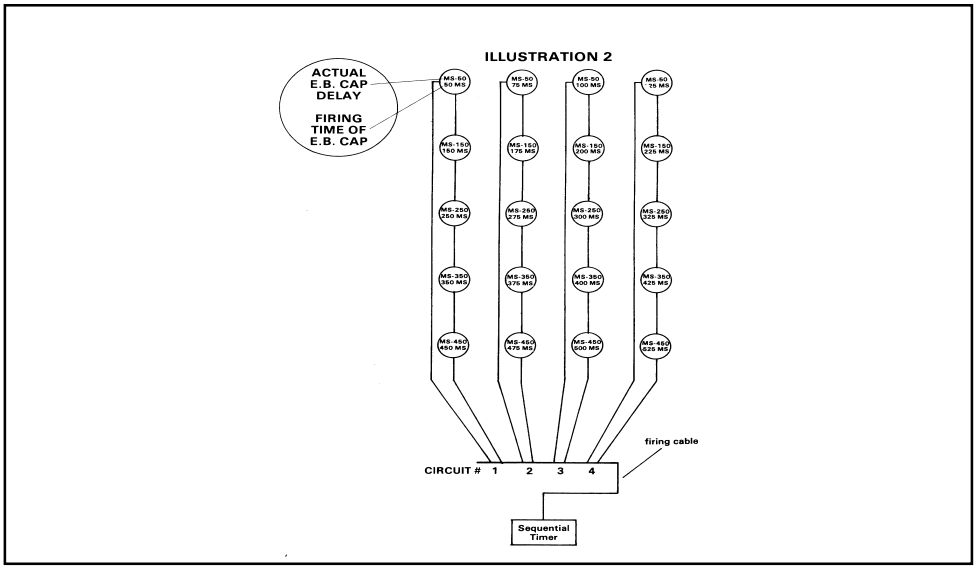

(Figure 10-2) Sequential blasting machine operation.

The sequential blasting machine is not, however, without certain limiting factors. The limitations exist not only within the machines, but also in the delay periods used. As higher delay periods are approached, a slight margin of error is encountered in the delay mechanism. A margin setting of 10 milliseconds could cause charges to detonate at time sequences of less than eight milliseconds apart if the delay period detonates the charges prematurely. (The margin of error in some delay caps can cause an overlapping of detonation of charges which will result in charges detonating at less than eight milliseconds apart.)

DESTRUCTION OF EXPLOSIVES (NON-DETERIORATED PRODUCT)

MISFIRES

If a misfire occurs, the blaster-in-charge must provide safeguards to exclude employees from the danger zone. All work shall cease except that which is necessary to remove the hazard of the misfire. Only those employees needed to do the work shall remain in the danger zone.

If there is a reason to believe a charge is burning in a hole, the blaster must evacuate the danger area and post and guard it for 12 hours. With electric blasting caps or nonelectric detonation systems, wait at least 30 minutes. If the misfire is considered electrical, recheck the wiring before returning to the danger area. Next, disconnect the lead wires, and check again with the galvanometer for a load exceeding the firing capacity of the blasting machine, and for broken or ground circuits.

If possible, another detonator shall be inserted into the shot and fired again. If a misfire occurs in solid material and has been stemmed with water, another primer shall be prepared, placed on top of the first charge, and fired again.

If a misfire takes place in solid material and has been stemmed or tamped with dirt, or clay, the packing or stemming material shall be blown out with compressed air from a semi-conductive hose or washed out with water. When enough of the stemming material has been removed to expose explosives in the hole, another primer shall be prepared, placed, and the blast refired.

Note - No drilling, digging or picking shall be permitted.

After the blast, a careful search for undetonated explosives is necessary. Explosives recovered from blasting misfires shall be disposed of or placed in a separate magazine until competent personnel determine a method of disposal. Caps recovered from blasting misfires shall not be reused and shall be disposed of.

Most misfires are due to some problem with the initiation system such as failure to make a connection, a broken lead wire, or simply not understanding the initiation system. Other causes of misfires are inadequate priming and malfunctioning explosives due to improper storage.

Detection of a misfire is no problem if none of the holes detonate. However, if a few holes or portions of a single hole fail to detonate, detection of the misfire can be very difficult and dangerous. In these cases, visual inspection of the muck pile for undetonated explosives and boulders, or other irregularities that suggest possible misfires, is the most reliable detection method.

Disposal of detected misfires is accomplished by removing the explosives with water or air flushing, repriming, and reshooting, or by detonating a nearby charge. Be aware, however, that detonating a nearby charge can be very dangerous and is not recommended.

The best way to avoid misfire accidents and costs is to eliminate their causes. This can be achieved by knowing the characteristics of the explosives, delays, and initiation system; proper blasting design; taking care in loading the shot and hooking up the initiation system; and by maintaining good housekeeping practices at the blasting site.

DISPOSING OF DETERIORATED OR DAMAGED EXPLOSIVES

General

Explosives and detonators are specifically manufactured to do only one thing well—EXPLODE. To accomplish that, they are purposely made with chemicals that are inherently highly reactive, and unpredictably in such products equates to danger, which may be extreme. The fundamental difference between excess explosives and deteriorated explosives is that deterioration quickly renders the product unreliable *and unpredictable*. Product stability and sensitivity will be changed, and there is no reliable way to predict the nature and extent of that change, particularly given the complex interaction of factors affecting it.

For this reason, both the Environmental Protection Agency and the National Park Service treat the handling and disposal of deteriorated explosives and detonators as a Hazardous Waste activity, NOT a blasting activity. Both agencies require that anyone physically handling deteriorated products be specifically licensed for that activity, and that the license be acceptable to EPA. To obtain a license requires a minimum level of special-

ized training in explosives chemistry, deterioration effects and risk assessment, and handling and disposal techniques, along with a minimum level of supervised disposal experience.

To repeat: The handling and disposal of deteriorated explosives and detonators is NOT a blasting activity, and a standard blaster's license in no way qualifies any person to safely engage in that activity. Even a slight misjudgment of product stability and sensitivity could be fatal. See *NPS-65* for more details on training and experience requirements for persons licensed as explosives disposers.

If burning is necessary, keep in mind that burning some explosives can cause them to detonate. As a result, they should be treated as if they will detonate. Proceed with burning as follows:

a. Do not burn explosives in deep piles. Spread sticks about one inch apart.
b. Empty boxes, paper and fiber packing materials that have previously contained high explosives shall not be used again for any purpose. Make sure they are empty, then destroy by burning at an approved location.
c. Keep disposal area clear of personnel until all debris is cooled.
d. Do not place explosive on hot ground.
e. Do not stir or add explosives after burning is started.
f. Exercise care to prevent disposal crew from inhaling fumes from burning explosives.
g. Maintain proper quantity distance from explosives.

Dynamite

Do not attempt to move any deteriorated nitroglycerin based product that cannot be destroyed in place by detonating. Leave a guard in the area and call your state police bomb squad.

Other Explosives

Some explosives, particularly newer types, may require disposal techniques other than detonating or burning. For example, a two-component explosive (fertilizer) usually can be deactivated by diluting the mixed explosive with an ample supply of water and spreading it on mineral soil adjacent to a road or trail, or a borrow pit area.

Consult the explosives manufacturer for specific disposal practices and recommendations. Explosives manufacturers have agreed to take explosives that are damaged, unusable, or deteriorated.

Detonators

Destroy all delay or instant electric blasting caps that have deteriorated from age or improper storage to an extent that they are unfit for use. Such caps may be very dangerous to handle. They should not be disturbed until an experienced blaster certified for disposal or a technical representative of the manufacturer has an opportunity to check them.

Detonators that have deteriorated or have been proven defective by a blaster's ohmmeter should be destroyed with an explosive or returned to the manufacturer. Corrosion is one sign of deterioration.

Do not throw detonators into wells or any body of water such as water-filled abandoned quarries.

If required, destroy detonators as follows:

a. Separate the detonator from the shunted wire by about one foot. Do not remove the shunt. Keep the remaining wire coiled as originally packed. Prepare no more than 50 detonators and place in a hole where they will be confined.
b. Make up an explosive charge that will cover the detonators and prime the charge with a good detonator or detonating cord.
c. After shooting thoroughly, examine the ground around the shot to be sure no unexploded detonators remain.
d. Do not use the same area for successive shots unless the entire area feels cool.

DETONATING CORD

Detonating cord can be disposed of in the same manner as detonators by confinement in a hole, placing a charge on top of the hole, and detonating.

GROUND VIBRATION AND AIR BLAST

A. Ground vibrations and air blast damage may become a serious problem to any blasting operation that must be carried out around populated areas, facilities, or structures. The Bureau of Mines has conducted many studies on the subject of ground vibrations and air blast as it relates to surface mining.

These studies have determined that particle velocity is the best criterion for predicting the probability of structural damage due to ground-borne vibrations. If the limits of most loading are followed to eliminate damaging ground vibrations, then the air blast hazard is usually compensated for automatically.

B. To maintain vibration within acceptable limits, studies by the Bureau of Mines have determined that a peak particle velocity of two inches per second adjacent to a structure will result in the probability of little vibration damage. The further limiting of peak velocity to 0.4 inches per second should minimize complaints from adjacent property owners. The Surface Mining Control and Reclamation Act (P.L. 95-87) limits the maximum particle velocity to one inch per second, and this is the standard that shall be followed in NPS blasting. In the absence of instrumentation, use a scaled distance of 60 times the square root of the weight of the charge as the minimum safe blasting distance.

C. Usually the distance from the blast area to the nearest structure is fixed. To determine the amount of explosives per delay period of eight milliseconds or greater that is permissible, use the following procedure:

$$D/\sqrt{W} > 60$$

That is, the distance in feet (D) from the blast to the point of concern divided by the square root of the charge in pounds per delay (W), should equal 60 or more.

D. As an example of use:

1. 25 lb/delay of explosives are to be used in a shot. A house is 350 feet from the blast site.

$$\frac{350}{\sqrt{25}} > 60 \quad \text{or}$$

$$\frac{350}{5} = 70 > 60$$

Because 70 is greater than 60, the loading in relation to the house is within the safe limit.

E. The nearest house is 2000 feet away. How much explosive per delay can be used and still be safe?

$$D\sqrt{W} = 60 \quad \text{or}$$
$$\sqrt{W} = D/60$$

$$\sqrt{W} = 2{,}000/60$$
$$\sqrt{W} = 33.33$$

Then $W^2 = 1{,}110$ lbs

1110 pounds per delay can be used and still be safe.

F. 36 pounds per delay is used in a shot. How far must the nearest house be to stay within the safe limits?

$$D\sqrt{W} = 60$$
$$D = 60\sqrt{W}$$

$$D = 60 \times \sqrt{36}$$
$$D = 360$$

The nearest house must not be nearer than 360 feet and still be safe.

G. A shot design uses 10 holes of 40 pounds each. The nearest house is 720 feet away. How many holes can be shot safely per delay?

$$D\sqrt{W} = 60$$
$$\sqrt{W} = D/60$$
$$\sqrt{W} = 720/60$$
$$\sqrt{W} = 12$$
$$W = 144$$

Use up to 144 pounds per delay. Because each hole contains 40 pounds each, no more than three holes can be shot per delay. The minimum number of delay periods is four.

H. In areas where complaints are likely, it may be wise to increase the scaled distance to 100. The basic equation in this case would be:

$$D\sqrt{W} = 100$$

I. The following table gives allowable weights of explosives per delay at various actual distances for scaled distances of 60 and 100:

Actual distance	Safe weight of explosives per delay at SD 60	Safe weight of explosives per delay at SD 100
10	0.03	0.01
25	0.17	0.06
50	0.69	0.25
100	2.78	1.00
250	17.40	6.25
500	69.40	25.00
1,000	277.80	100.00

Delay must be equal to or greater than 8 milliseconds.

J. This is a very limited discussion of ground vibration and air blast. For large blasts or continuing projects in close proximity to sensitive areas, see *Bureau of Mines Bulletin 656* or consult the regional blaster examiner

for direction.

K. Air blast does not contribute to the damage problem in most blasting operations. A safe blasting limit, .007 psi over pressure air blast, is recommended. This will equal to 128 dB on the linear peak scale and is the maximum allowed by public law.

L. Except in extreme cases, lack of adequate stemming (surface shots), the control of blasting procedures to limit ground vibration levels below l.0 inches per second, automatically limits overpressure to safe levels. In sensitive areas, it may be necessary to eliminate the use of detonating cord on the surface to minimize air blast.

M. Precautionary measures that will help in eliminating complaints and damages from air blast:

1. Use adequate burden and stemming (confinement).

2. Blast when wind is favorable (away from structures and populated areas).

3. Avoid blasting during temperature inversions.

4. Avoid or cover surface detonating cord.

5. Blast during period of high ambient noise (noon).

N. Other types of surface blasting may require the use of seismic instrumentation, especially where structures are within one mile of the blast site.

BLASTING VIBRATION AND AIR BLAST

Blasting vibration and air blast are two conditions that can cause people living in the area of a blast to register complaints. Such complaints can be communicated to the operator or to governmental and regulatory agencies.

Severe vibrations and air blast can and *do* cause structural damage to nearby buildings. These conditions must be controlled by the blaster. Less severe vibrations and air blast may not cause damage, yet they still disturb residents of the area. The response to lower level vibrations can range from no complaints at all to annoyance complaints, and even claims for damage.

Obviously, it would benefit the blaster to control blast vibrations to eliminate damage to structures and minimize complaints. Adequate control of vibration and air blast (noise) can usually be accomplished by proper blast design and planning. Such planning and design can usually be undertaken by the blaster. However, if the situation is serious and difficult to deal with, the blaster should consult an expert on both vibration control and blasting.

When an explosive detonates, a large amount of energy is rapidly released by the means through a chemical reaction. The shock and pressure from the gas react against the area around the explosion—the ground and the air.

If the pressure wave travels through the atmosphere, it is called *air blast* or *air overpressure*. If the wave travels along the surface of the earth, it is called *blast vibration*. Air blast can be felt and may be thought to be ground vibration because it is low frequency and cannot be heard. This low frequency sound is called *concussion*. Movement of rock can also cause movement of the air, which can be felt as a concussion. Consequently, a concussion wave may result without any noise.

Normally, both vibration and air blast are produced by the detonation of an explosive. However, the effect of one may be stronger than the other, depending on how the explosive is confined at the instant of detonation. An explosion in a borehole will produce a pressure wave in the earth surrounding the borehole. As the pressure wave propagates, or travels away from the borehole, it stabilizes into what is called a *seismic wave*. Two modes of seismic wave propagation have been identified. One is a body wave propagation, through the earth, and the other is a surface wave that propagates at ground level. Usually, a surface wave is produced when a body wave travels to the surface and is reflected back to the earth. The disruption of the surface by the reflection of the body wave creates the surface wave. The movement of these waves is similar to the ripples of a pool into which a rock is thrown.

The earth consists of many minute particles of rock that are cemented together. There is a small amount of give, or elasticity, in this cement. Vibration is actually the displacement or movement of these particles. The particles are displaced a fraction of an inch by the pressure wave. Then, the elastic nature of the cement takes over and the particles begin oscillating. As the oscillations cease, the particles return to their original position. Such oscillations are measured and recorded to determine the magnitude of the blasting vibration.

Blasting seismographs are used to measure and record the vibration. Three terms are utilized in this process. They are based on elastic wave theory and are related to the movement of the particles of earth. This movement is referred to as "ground particle velocity."

Displacement - The distance that particles move when they are oscillating.

Velocity - How fast the particles move when they are oscillating. Since the velocity is continually changing, the peak or maximum velocity is the useful value that is reported. The peak particle velocity is expressed in inches per second.

Acceleration - The rate at which the particle velocity changes during oscillation. It is usually reported in feet per second squared.

A blasting seismograph records three levels of particle movement:

1. Longitudinal - This is the back and forth particle movement in the same direction that the vibration wave is traveling.

2. Vertical - Up and down particle movement perpendicular to the direction the vibration wave is traveling.

3. Transverse - Left and right particle movement perpendicular to the direction the vibration wave is traveling.

A study conducted by the Bureau of Mines and published in *Bulletin 656* reached the following conclusions:

1. Particle velocity is the best criterion for predicting the probability of vibration damage to structures.
2. Particle velocities less than 2.0 inches per second show little probability of causing structural damage, while particle velocities greater than 2.0 inches per second are more likely to cause damage.
3. If there are at least eight milliseconds (0.008) between detonations, the vibration effects of individual explosions are not cumulative.

Processes or procedures for minimizing vibration from blasting are as follows:

1. Use delay blasting to separate the explosives used in a blast into a number of individual detonations. If the interval between delay periods is at least eight milliseconds, the individual detonations can be treated as separate blasts and their vibration will not be cumulative.

2. Limit the weight of explosives per day period (more than eight milliseconds) in accordance with the Bureau of Mines and Commonwealth of Kentucky scaled distance equation.

$$W = (D/Ds)2$$

   Where W is the safe weight of explosives in pounds and D is the actual distance in feet to the nearest structure of concern. Either determine an appropriate value for the scaled distance Ds by means of several instrumental blasts, or use a minimum value of 50 or 60.

3. Use less than the calculated safe weight of explosives for the first one or two periods in tight shots.

4. Use only the amount of subdrilling that is necessary to pull the bottom of the blast. As with boreholes that do not have adequate relief for the rock, much of the energy released by the explosives in the subdrilled part of a borehole will go into the production of vibration.

5. When limiting the weight of explosives per delay to a relatively low amount, it may be necessary to modify the blast design.

   a. Reduce the size of the blast by using small diameter, shallow boreholes. This will involve a commensurate decrease in burden and spacing and perhaps using several lifts to remove the rock to the desired length.

   b. In deep boreholes, use decked explosives charged with a different delay in each charge.

   c. A millisecond delay blasting switch can be used to increase the number of delays periods that are available for use in the blast.

Air blast is a compression wave that travels through the atmosphere in a manner similar to the way a P-type body travels through the earth. Air blast may be produced by one or more of two different mechanisms. The first is from the energy released directly to the atmosphere by the detonation of an unconfined explosive such as exposed detonating cord. The second occurs when the high pressure gaseous by-products from a confined detonation are released into the atmosphere. This can be caused by a mud seam, inadequate stemming, or insufficient burden.

It has been found that windows, probably the weakest part of a structure that will be exposed to air blast, usually suffer the most damage. Extremely high overpressures could also cause the formation of exterior masonry cracks or interior plaster and wall board cracks.

Attention must be given to both the structural damage and disturbance caused by air blast. Structural damage is a concern for obvious reasons, while disturbance, or annoyance, is considered a form of pollution by some environmental protection agencies. Annoyance can also lead to vibrations complaints and legal actions.

GENERAL BLASTING PRACTICES SAFETY

This section consists of the "do's and don'ts" of the explosive industry. It is the responsibility of all persons who handle explosives to know and follow all industry safety procedures.

— **Do not** place explosives where they may be exposed to flame, excessive heat, sparks, or impact.

— **Do not** allow unauthorized or unnecessary persons to be present where explosives are handled or used.

— **Do not** use any explosive unless completely familiar with the explosive, including the correct and safe procedures for its use.

— **Do not** carry explosives in the pocket of your clothing or elsewhere on your person.

— **Do not** use explosives or accessory equipment that are obviously deteriorated or damaged.

— **Do not** strike, tamper with, or attempt to remove or investigate the contents of a detonator, or try to pull the wires, fuse, or detonating cord out of any detonator or delay device.

— **Do not** insert anything but safety fuse in the open end of a blasting cap.

— **Do not** attempt to reclaim or use safety fuse, detonating cord, detonators, or any explosive that has been watersoaked, even if they have apparently dried out.

— **Do not** handle, use, or get near explosives during the approach or progress of any electrical storm. All persons should retire to a safe place. This applies to both surface and underground operations.

— **Do not** force a detonator into dynamite, cast primers, or boosters. Insert the detonator in a hole in the dynamite that is made with a punch suitable for that purpose. If the hole in the cast primer or booster is too small for the detonator, do not use the cast primer or booster.

— **Do not** make up primers in a magazine, or near other large quantities of explosives, and do not make more primers than are necessary for immediate needs.

— **Do not** force explosives into a borehole or through an obstruction in a borehole. This is particularly hazardous in dry holes and when the charge is primed.

— **Avoid** placing any part of your body over or in front of the borehole when loading and tamping.

— **Do not** slit, drop, deform, tamp, or abuse the primer or drop another cartridge directly on the primer.

— **Do not** return to the area of any blast until the smoke and fumes from the blast have cleared.

— **Do not** attempt to investigate a misfire too soon. Follow recognized rules and regulations. Wait 30 minutes when using electric caps and one hour if fuse caps are used.

— **Do not** drill, bore, or pick out a charge of explosives that have misfired. Misfires should be handled by or under the direction of a competent and experienced person.

— **Do not** fire a blast without a positive signal from the blaster in charge.

— **Do not** fire the shot from in front of the blast.

— **Do** make certain that all surplus explosives are in a safe place; all persons, equipment and vehicles are at a safe distance; all access routes into the area should be posted with guards; and adequate warning has been sounded.

Chapter 11
SPECIALIZED BLASTING TECHNIQUES

This chapter includes information about:

- Avalanche Blasting
- 105-M 102 Howitzer
- Military Weapons
- Fireline Explosives
- Burnol Backfiring Devices
- Animal Carcass Removal
- Boulder Blasting
- Air Gapping
- Expansion Alternatives

SECTION 11A - AVALANCHE BLASTING

SECTION CONTENTS:

- Initiating Devices
- Explosive Assembly
- Use of Hand Charge
- Cornice Control
- Explosive Safety
- Recoilless Weapons - Military Weapons
- Avalauncher

AVALANCHE BLASTING

Slope testing, avalanche release, and snow stabilization are the main objectives for using explosives in avalanche blasting. To achieve these objectives, a standard charge is used that is capable of developing detonation pressure equal to 1 kg of TNT.

There are several types of explosives that can develop the appropriate detonation pressure. By knowing the detonation velocity and the density of a given explosive, the detonation pressure can be calculated (Chapter 2 - Explosives).

Initiating Devices

Avalanche blasting is based on a nonelectric detonating system or systems that are not susceptible to initiation from the high static electricity that is prevalent in snowstorms and near ridge crests. Even with non-electric blasting caps, avalanche blasting should not be conducted when there is evidence of a strong static electricity field (cumulonimbus clouds, electric buzzing).

Cap-and-Fuse - A cap-and-fuse assembly can detonate explosives that are sensitive to a No. 6 cap (Figure 11-1). However, in severe winter weather, some primers with low proportions of sensitizers may require a No. 8 cap or larger. Blasting caps are susceptible to accidental ignition from excess heat, friction, or static electricity and should be handled with great care. Where adverse conditions are expected (static electricity), other techniques should be used or the blasting operation should be shut down.

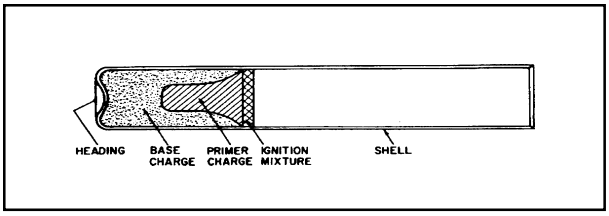

(Figure 11-1) Dupont nonelectric blasting cap.

The highest quality safety fuse should be used. The fuse length depends on the time needed to escape the blasting location. Always add a margin of safety. After a new roll of fuse is purchased, a test segment should be ignited and the burning rate should be timed. Under no circumstances should a fuse be cut to a length that allows fewer than 120 seconds burning time or less than state law allows. (Times may be greater is some states.)

Safety fuse should be stored, uncoiled, and assembled to the cap at room temperature under controlled conditions. Fuse should be cut squarely and inserted in the blasting cap immediately. A clean, square cut (Figure 11-2a) allows proper assembly. Cutting on the slant (Figure 11-2b) prevents seating. **Under no circumstances shall an ignitor be placed on the fuse until the charge is to be detonated.**

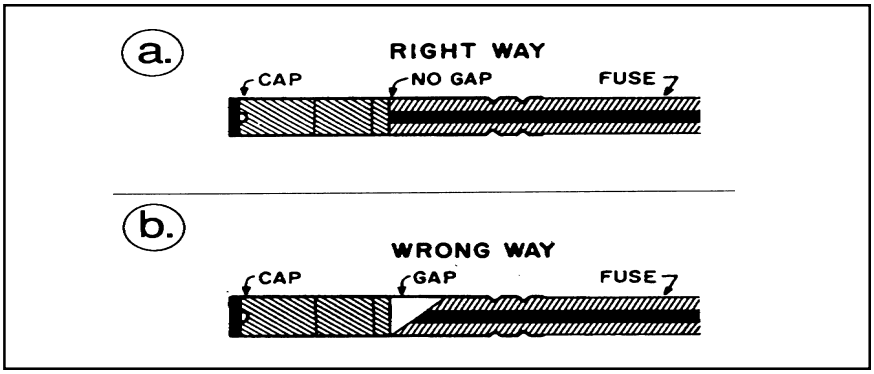

(Figure 11-2) Proper cap and fuse assembly.

Nonelectric Detonating System (Nonel) - This is a thin plastic shock tube that has a light dusting of reactive powder on the inside surface (approximately one pound per 70,000 feet). When initiated, this tube will reliably transmit a low-energy signal from one point to another by means of a shock wave phenomena much like a dust explosion. It will reliably detonate around sharp bends and through kinks. Because the detonation is sustained by such a small quantity of the reactive material, the outer surface of the tube remains intact during and after functioning. Nonel can be initiated by detonating cord or by a blasting cap. It will reliably initiate instant or delay Nonel blasting caps.

EBW (Exploding Bridgewire) - Exploding bridgewire detonators do not contain any primary explosive and are not detonated by stray currents, static electricity, radio transmission, or fire. A large, precisely timed electrical pulse from a special firing set is required to detonate an EBW. This firing set delivers the required electrical charge to the detonator through a maximum of 2500 feet of hookup wire. Three detonators, the RP-80, the RP-83, and the RP-501, may be used with this system.

Explosive Assembly

Cast Primers - Cast primers are usually high-density, pressed, or cast cylinders of TNT, RDX, Pentolite, and/or other ingredients. They are fast, powerful explosives that are relatively insensitive to accidental detonation by shock or friction. Most were developed by the military to withstand the rigors of the battlefield. Headaches can be produced by volatilization in overheated magazines, but are caused most often by skin absorption from handling charges. One disadvantage of TNT is that it leaves a messy black crater; another disadvantage is high cost. Pure TNT is not reliably detonated by No. 6 or No. 8 blasting caps, so cast primers of TNT include a more sensitive explosive, such as PETN.

Gelatin Primers - Gelatin primers are less expensive than cast primers and do not leave a black crater. They may detonate as fast as TNT, but are slightly more bulky. They have a high percentage of nitroglycerin mixtures; they produce headaches, deteriorate, and are more shock-sensitive than cast primers. Nitroglycerin begins to freeze at -29 degrees Centigrade (-20 degrees Fahrenheit) and, if frozen, is very susceptible to premature detonation when punched. Therefore, it should not be used near this low temperature. NEVER attempt to thaw frozen dynamite by applying direct heat. Place it in a normal temperature room and allow it to gradually reach room temperature.

Two-Component Explosives - Gelatin and cast primers are classified as high explosives and must be stored and handled according to strict codes (see Chapter 3 - Storage). Because of regulations dealing with explosives security, storage is expensive. Where there is a limited need for explosives, avalanche workers may wish to avoid the more expensive storage requirements by using a two-component system. Stored separately, the components are not high explosives. They are classified as high explosives only when mixed.

The storage advantage is offset by higher cost of materials, bulkier charges, the inconvenience of mixing the explosive in the field, and the requirement of a mixing time of about one-half hour to bring the mixture to full strength. Mixing should be done at temperatures of 0 degrees Centigrade (32 degrees Fahrenheit) or above. Once mixed, the explosives will detonate at -50 degrees C or lower. When using two-component explosives where the charge will be thrown, tape the cap to the container to avoid separation and misfire.

General Considerations - As soon as the cap-and-fuse is inserted into the explosive, the system is armed. From this instant, the relatively insensitive explosive contains a sensitive cap and is vulnerable to accidental detonation. For this reason, delay arming as long as possible. Usually it is possible to arm the explosive just before tossing the charge onto the target. However, when wind and temperatures are severe, overall safety is

sometimes served by arming the explosives in a shelter before starting on the control route. Under no circumstances should the ignitor be put on the fuse until just before tossing the charge.

Arming Cast Primer - Figure 11-3 shows the steps for double arming cast primers. Most cast primers are manufactured with a hole through the middle, and an off-center hole that does not go all the way through the primer. The central hole is designed to be detonated by high-explosive detonating cord. The off-center hole is usually lined with a primer, that is sensitive to a No. 6 blasting cap. It is essential to place the cap in the proper hole to avoid a misfire. In avalanche work it is convenient to lace the fuse tightly through the central hole and then into the off-center hole, snug against the end of the hole. The assembly is then taped securely with appropriate tape.

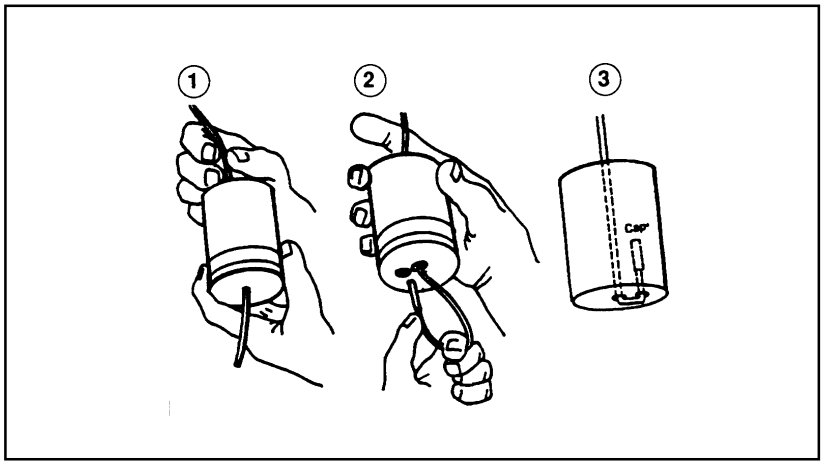

(Figure 11-3) Arming single cast primer.

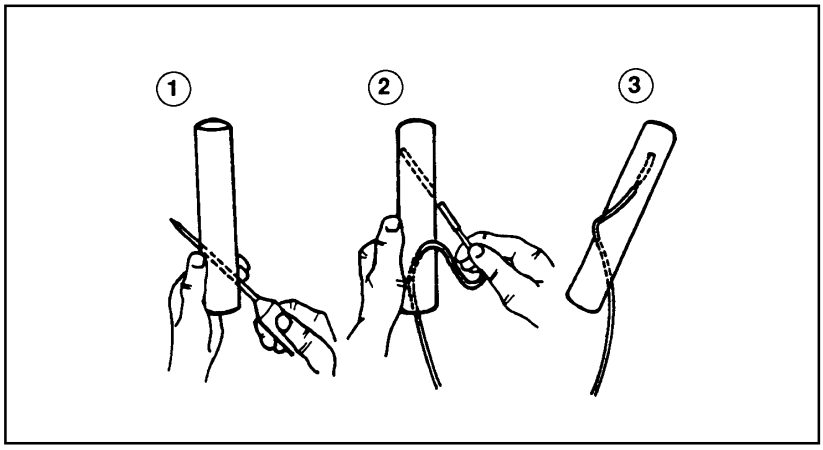

(Figure 11-4) Arming gelatin primer.

Note: The arming of two joined cast boosters is similar to the illustration in Figure 11-3 with the exception that both boosters will be capped and the fuse will pass on the outside and be considered double armed and lit simultaneously.

Arming Gelatin Primer - The arming of a gelatin primer is shown in Figure 11-4. Gelatin primers have no precast holes, so it is necessary to punch two diagonal holes. First, a hole is punched through the charge with the punch end of the crimper. Then, the charge is rotated one quarter of a turn, and a second hole is punched slightly deeper than the length of the cap. The fused cap is then laced through the first hole and the cap is inserted into the second hole. The assembly is taped securely.

Arming with Detonating Cord - Explosives may be detonated with detonating cord. Charges are armed by taping the cap to the detonating cord or joining the cap and the cord with special connectors. The explosive end of the cap should point along the detonating cord, toward the main charge. A minimum of 25 grains per foot shall be used. Consult manufacturers for proper size of cord. Because the cap is exposed and vulnerable to accidental shock in both of these systems, make the final connection of cap and detonating cord only at the blasting position when ready to fire.

Use of Hand Charge

The prepared charge, including detonator, is carried in the control team member's pack. The person should not be loaded so heavily that skiing is clumsy. Ignitors are carried separately from the explosives. Team members keep in constant contact using radios. Once at the blasting position:

a. Make sure all possible run out zones are free of people and traffic. For areas not visible from the blasting point, arrange for signals from an observer.
b. Work with only one charge at a time.
c. Step into blasting position and make final check of target and escape route.
d. If not pre-armed, arm the charge.
e. Clip approximately one inch off the end of the safety fuse and firmly insert the fuse into the ignitor. The ignitor should be activated immediately. Caution: Occasionally, the act of inserting the fuse into the ignitor may cause ignition before the ignitor is activated.
f. Absolutely **NO RELITES**.
g. Get to a safe position and await detonation.
h. The charge will be held no longer than 30 seconds The charge will be tossed and under no circumstances will there be an attempt to retrieve explosive.

Applications for Explosives in Snow Work

Cornice Control

A. A simple and safe procedure for cornice blasting is to put surface charges of cast or gelatin primers, or the equivalent (ANFO) or slurries) along the estimated tension line of the cornice roof adequately.

1. Select the number of charges necessary to cover the extension line of the cornice roof adequately Lace each charge with an 18 inch length of detonating cord, referred to a branch line

2. Set out a trunk line of detonating cord parallel to the safe working line.

3. Set the first charge into position along the working line. Attach the branch line of the first charge to the mainline with a girth hitch, clove hitch or other approved connector.

4. In a similar manner, connect the adjacent charges on down the line until all charges are connected.

5. After connecting all branch lines to the trunkline, carefully push each charge from the working line to the presumed tension line of the cornice.

6. Align each branch line perpendicular to the trunkline.

7. Loop the end of the trunkline to form a continuous loop back to the starting point and attach the line to complete a loop.

B. A more efficient blasting scheme is to bury the charges in a row of boreholes. In borehole cornice blasting, one may achieve satisfactory results with about half the explosive used in surface blasting. It is also possible to blast effectively with low-cost, low-detonation pressure explosives, although borehole blasting of cornices increases efficiency, boring holes along the presumed tension line exposes the avalanche blaster to considerable danger. Safety in borehole blasting depends critically on:

1. The blasting crews ability to judge correctly the safe working line.

2. Feasibility of maintaining a tight secure belay.

C. The recommended steps in borehole blasting are:

1. The driller, belayed securely, steps into position on the safe side of the working line and drills a row of holes no deeper than half the thickness of the roof. Boreholes are drilled as close as possible to the cornice's potential tension line.

2. Borehole diameter should allow the charges to fit as tightly as possible. Space holes as needed. Because cornice snow is normally quite hard, boring might require an auger.

3. Once holes are bored, string out the trunkline of detonating cord. To prevent loss of explosives in the event of a sudden cornice collapse, secure a free end of the main line to an anchor until the system is ready to be detonated.

4. Insert a charge attached to the branch line into the first hole. Connect the branch line to the trunkline; refill the hole with snow, and compact it lightly.

5. After preparing all boreholes this way, make a continuous loop of the trunkline and tie it to the main turn line so all charges are inside the loop. The explosive end of the cap must point down the trunkline toward the first charge. Tie this to the main line just before igniting the charge. Firing takes place after the usual check with the posted guard.

D. Because detonating cord plays an important role in cornice blasting, become acquainted with the basic techniques for working with this high explosive (See Chapter 5 - Detonating Cord).

Explosive Safety

All avalanche blasting work, including storage, transportation and handling of explosives, must comply with all laws.

A. General

1. An avalanche should not be released artificially until the avalanche path, including the potential runout zone, is cleared of people.

2. Position avalanche guards at the entrance to the path if there is any chance that people will enter the path during blasting.

3. During unstable conditions, artificial release of one avalanche may trigger sympathetic release over a wide area. Consider such possibilities and clear the appropriate area.

B. Personnel

1. Each avalanche control team shall consist of a qualified and licensed blaster and at least one trained assistant plus the required appropriate hot guards.
2. All members of the blasting team should be in good physical and mental condition and should be competent ski mountaineers. They shall all be equipped with electric transceivers and other safety gear as required (probe, ski poles, shovel).
3. All members of the blasting team shall be properly trained and qualified.
4. Responsibility for the preparation and placement of the charge shall not be divided. The blaster-in-charge is responsible for supervising all phases.

C. Explosives

4. Always handle explosives with utmost care.
1. The blasting crew must wait at least one hour before approaching any misfire. Note: Some state regulations may be longer. A misfire aflame or emitting smoke must be left alone.
2. The normal procedure is to disarm and retrieve the charge and then to escape to an avalanche-free location.
3. Deviation from the normal procedure (for example, planting a second charge next to the misfire) depends on the cause of the misfire, the sensitivity of the explosive, and the location of the charge.
4. Misfire charges which cannot be found and disposed of within 24 hours are considered abandoned explosives by law, and must be reported to both the regional blasting officer and BATF. The absolute liability associated with explosives requires that search efforts be continued until the misfire charge is located and disposed of even if that means after snowmelt. For this reason, every precaution shall be taken to prevent the occurrence of misfired charge.

E. Preparation of Detonating System

1. To prevent misfires, the detonator assembly shall be properly attached to the explosive charge.
2. Charges shall be armed with caps as late as possible in the blasting operation.

F. Firing of Charge

1. If using fuses, ignite only one fuse at a time.
2. Immediately place or throw the charge.

G. Placing Charge From Control Route

1. Place or throw the charge down onto the target from a safe position, preferably a ridge, then, retreat to a safe position.
2. In cases where the charge could slide down on a hard snow surface, it must be belayed or anchored.

H. Misfires

1. A conscientious effort must be made to detonate a misfire.
2. If conditions make it impossible to confirm detonation the slope should be guarded and closed to all access immediately. If not found, record the probable location. Record as much information as possible to aid in the detonation of the charge at a later date.
3. The blasting crew must wait at least one hour before approaching any misfire. NOTE: Some state

regulations may be longer. A misfire aflame or emitting smoke must be left along and considered a hang fire.

4. The normal procedure is to detonate the charge.

Howitzer Weapons and Ammunition

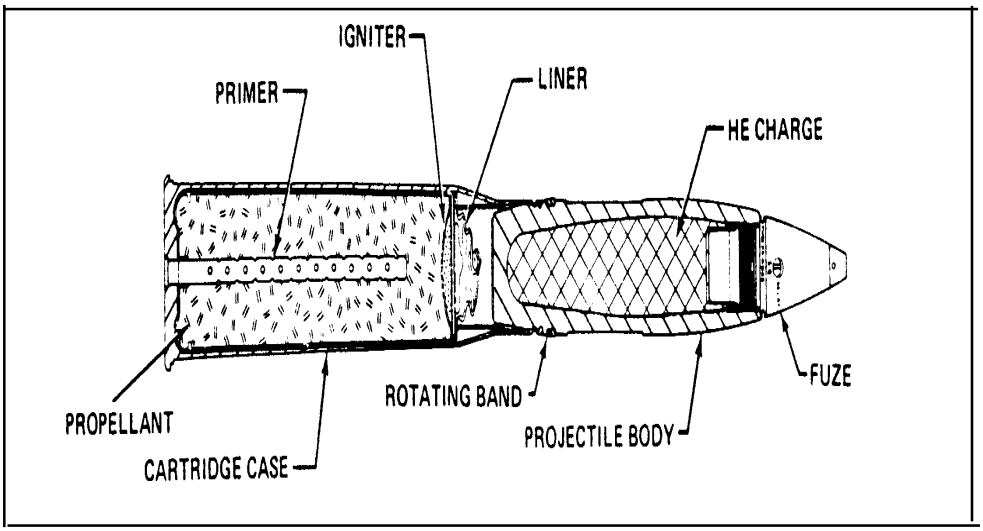

(Figure 11-5) Cartridge for 105 mm recoilless rifles used for blast, fragmentation and mining effects

Weapon

A cannon is a component of a gun, 105 Howitzer and consists of an artillery tube and a breech mechanism, firing mechanism, or base cap. Howitzer cannons are indirect fire weapons which characteristically fire projectiles with medium velocities at relatively high angles.

The M1-05-101-2 is a mobile general purpose field artillery piece. It is manually operated, single-loaded, with the firing mechanism being a continuous-pull (self-cocking) type, actuated by pulling a lanyard. The recoil is a hydropneumatic type, with a floating piston and a pneumatic respirator. The 105 Howitzer is used for either direct or indirect fire and can be elevated to high angles to deliver plunging fire on a target. The howitzer materiel can be disassembled into three major components; the howitzer, the recoil mechanism, and the carriage.

Howitzer Ammunition

When the percussion primer is struck by the firing pin of the weapon, the resulting flash ignites a small charge of black powder in the primer. The sparks and flame from the black powder ignite the propelling charge. The gases from the propelling charge drive the projectile through the bore of the weapon, where spin is imparted to the projectile by the engagement of the rotating band with the rifling bore. This spin stabilizes the projectile in flight. When the fuze functions on the target, the bursting charge detonates with both blast and

Types of Ordinance

HE: High Explosive - HE cartridges, which are made of steel and have a large bursting charge of high explosive, produce blast and fragmentation. They are used against personnel and materiel targets, and may be fitted with either a time and impact or impact fuze, according to the action desired.

HEAT: High Explosive Anti-Tank - HEAT cartridges contain a high-explosive shaped charge and are used against armored targets. They are fused with point-initiating (PI), base-detonating (BD) fuzes. When the projectile is detonated, the cone collapses, creating a high-velocity shock wave and a jet of metal particles that penetrate the target.

HEP: High-Explosive Plastic - All HEP ammunition is painted olive drab with markings in yellow. Rounds of recent manufacture have a two-inch black band encircling the projectile. Fuzes for HEP are base-detonating and require no setting. HEP is very effective against bunkers, log barricades, and similar targets. Protect unpacked rounds from sharp tools, sticks, and rocks that could puncture the propellant liner. Do not strike, drop, or handle HEP cartridges in any manner that might damage the nose of the shell body (which is easily deformed).

Howitzer Weapons And Ammunition

This M102 SOP has been adapted to avalanche control and is not all inclusive. This serves as a supplement to army technical manual TM9-10150234010, Operator's Manual for Howitzer, Light, Towed 105-mm, M102. It is not intended to be the sole source for information when deploying, firing, servicing or maintaining the weapon system, but does put terms into context for avalanche controllers to understand.

Safety must be first in everyone's mind when operating any military weapon. Howitzers do recoil and can inflict grave injury to life and limb. Moving in and around the weapon can be dangerous due to slick surface areas, exposed parts and awkwardness of handling ammunition. When considering operating/firing procedures, take into account these hazards and coordinate procedural movements and commands. Control programs differ from place to place. Deployment needs, man power requirements and locations restraints are to name a few. Because of these consideration, operating and firing procedures will differ from area to area for this weapon system.

However key safety issues have been mentioned and should be taken into account. Under no circumstances should a person be allowed to operate the Howitzer with less than the minimum amount of training that your program has deemed necessary.

All rules and regulations set forth by local, state and federal governments concerning the use, storage and movement of weapon and ammunitions must be followed at all times. Each area will be responsible for establishing acceptable firing procedures that apply to their needs, taking into account safety issues.
fragmentation effect.

Projectiles

Projectiles for howitzers are steel-walled cylinders with conical, curved, or spiked noses and square bases. The interior contour of the projectile varies from model to model to accommodate different types of fuzes and high explosives fillers, at 5 bags. Set for SQ - instantaneous detonation upon impact.

Cartridge Case

Cartridge cases used with the majority of howitzer rounds are made of steel or aluminum. In some cases, a three or five piece spiral-wrapped steel case is utilized.

Propellant

The howitzer cannon ammunition, except HEAT rounds, contain Propellant M1, which is composed of a base charge, and varying numbers of increments for fire adjustment.

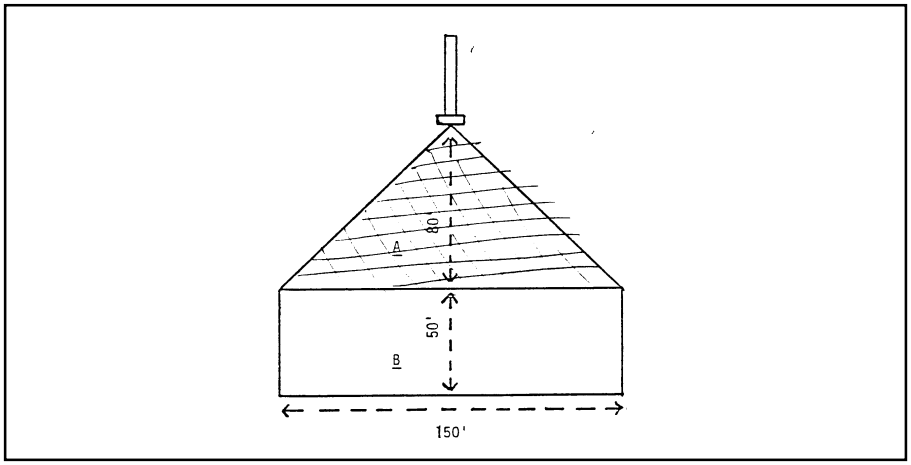

Figure 11-6) Danger Zone Diagram. In Area A there is danger of serious injury from blast and heat. In Area B there is danger from flying debris.

Military Weapons

A. Certification for Use

1. All employees that will use military weapons must be certified every three years by the U.S. Army personnel. A regional military weapon and ammunition certification training session will be held for this. Certification is based on the results of written and oral examinations and a practical field exercise.
2. In addition, applicants must meet these requirement of the Organized Crime Control Act of 1970:
   a. Be over 21 years of age.
   b. Never have never been indicted or convicted for any felony crime.
   c. Do not use unlawful drugs.
   d. Do not use alcohol to excess.
   e. Convicted for violating laws of domestic violence

3. The written examination covers the safety of weapon use and the handling, transporting, and storage of ammunition.

4. In the oral examination, the applicant must demonstrate an overall understanding of safety rules for military weapons, firing techniques and principles.

5. Applicants must demonstrate in a field exercise, or in a mock field exercise, the ability to handle ammunition and to set the ammunition for loading, aiming, and firing. They must demonstrate actions to take in the event of a misfire, cook-off, and a dud.

6. From the results of the written examination, the oral examination, and the field exercise, or US army personnel examiner or a designee determines if the candidate is fully qualified. Applicants not fully qualified, but who have not been eliminated, will be placed in an in-training category until experience and skills have been obtained. They will then be reexamined for certification. The in-training category is gained only through the certification process.

7. Certificates must be renewed every three years. Renewal will be under the same conditions as the issuance of the original certificate. A yearly refresher course shall be given to all personnel who use military weapons.

9. Certificates can be suspended at any time by the NPS, or upon the recommendation of the US Army examiner. Suspensions will be made when safety violations have occurred or when evidence exists that there is a lack of skill. To regain certification, a suspended employee must pass the exams and field exercise and be recertified by the US Army Certified Personnel and reviewed by the Regional Blasting Officer.

10. Each Park shall have a Standard Operating Procedure (SOP). This SOP shall be reviewed by the regional examiner and approved by the US Army authorities.

NOTE: Under no circumstances (in the case of a dud/non detonated round) shall NPS employees undertake disposal activity. Only experienced Army personnel trained in ordnance disposal shall undertake this hazardous task.

B. Military Ammunition Storage

1. Military ammunition storage facilities shall be fireproof, weatherproof, bulletproof, and theft-resistant. All above ground facilities must be constructed to conform with the requirements for lightning protection found in the current edition of the National Fire Protection Association Standard No. 78.

2. Ammunition may be stored in approved magazines cordwood style (that is, piled so they touch each other in their original cardboard tube or other type of original packing cover) only. The minimum distance from the magazine to inhabited buildings, highways, ski lifts, and designated ski runs is 1200 feet for 105 mm and 106 mm ammunition. These minimum distances provide reasonable protection from flying fragments (See Chapter 3 - Storage).

3. Above ground storage:
   a. Magazine storage buildings for ammunition only must meet the minimum requirements as de-

scribed in ATF Explosive Laws and Regulations (ATF p. 5400.7) dated 10/91 or the latest edition, subpart K-Storage, section 55.207 with the following exceptions:

1) The interior of the magazine does not need to be constructed of a non-sparking material.
2) Only outdoor facilities shall be used, all doors shall be constructed of 3/8-inch steel plate and lined on the inside with two inches of hardwood.

b. Ammunition may be stored above ground at less than 800 and 1200 feet from inhabited buildings, highways, ski lifts, and designated runs if facilities are designated to resist mass detonation and to provide directional control of blast and fragments.

c. For magazines with 12-inch thick, reinforced concrete walls and roof, or with three feet of earth cover against the walls and with the access door in the roof, the following apply:

	Minimum Round Separation Inches	Fragment Hazard Distance Feet
105mm	4.00	60
105mm	4.75	60

(Figure 11-7)

d. The minimum round separation may be provided by a *winerack* fabricated from concrete or concrete pipe or from tubing with sand as a separating medium. Materials other than these may be used for winerack construction, providing they have been approved by and have been tested to the satisfaction of the NPS. The cost of such testing is the responsibility of the permittee. Cardboard tubes shall be completely contained within the winerack except that the primer end may stick out approximately one inch for ease in removing the tube from the winerack.

e. Where magazine access doors are in the sidewalls, 1200 feet must be used as a fragment hazard distance in the direction the door faces for 105 mm ammunition. This distance is necessary, unless barricades or other means reduce the fragment hazard distance. Directional control of air-blast and fragments can be achieved by designing a weak wall or roof (usually by placement of the access door) or by strengthening the walls with earth.

f. Location and design of the storage facility must consider the fragment hazard distance and the potential damage from the air blast of an explosion.

g. When the access door is in the roof, fragments are projected through this weak point in the roof and fall back to earth close by, while fragments projected through a sidewall access door travel a greater distance because of horizontal velocity.

h. The following thicknesses of cover or embankment are considered adequate to provide protection against fragment throw (this criteria should be used in areas where fragment throw cannot be permitted in certain directions):

4. Underground Storage:
   a. Ammunition may be stored underground, cordwood style, at less than 800 feet (75 mm) and 1200 feet (105 mm) minimum distance, if the appropriate formulas are used to determine the depth of cover required as protection against fragment throw.

   b. HEP-T ammunition has an explosive filler of Comp A3 and the filler weight must be multiplied by a factor of 1.35 to obtain the equivalent TNT filler weight. The explosive filler weight W is the sum of the weights of filler in the total number of rounds to be stored in the facility.

   c. The depth of overburden arrived at by using these formulas is considered adequate against debris throw, except in the direction in which the explosion is vented. The blast areas must be clear of buildings, highways, roads, ski lifts, designated ski runs, and other inhabited facilities for 800 feet for 75 mm, and 1200 feet for 105 mm ammunition. This cover should be used in areas where debris throw cannot be allowed in certain directions.

   d. The minimum distance from tram towers, terminals, ski lift towers, inhabited buildings, and other items that could be damaged by shock waves or air blast from an explosion must be considered on an individual basis. Minimum distances shall be determined as described in the interim change to DOD 6055.9, Chapter 9, "Quality-Distance Standards for Underground Storage."

   e. Tables 11-4 gives the number of rounds, total pounds of explosives, and amount of cover required to eliminate debris throw for various ammunition using hard rock or earth cover. This is adequate to eliminate debris throw, except in the direction of the access door.

	Earth Cover Feet	Hard Rock or Concrete Feet
105 mm M-323 HE	5.80	4.75
105 mm M-326 HEP-T	7.50	6.0

(Figure 11-8)

C. Weapon Security. Discourage theft of avalanche control weapons by:

1. Removing vent assembly, firing pin from firing control sight, breech, or similar part of the weapon after firing sequence and storing in the ammunition storage magazine or other similar locked facility.

2. Removing guns from firing stand and storing in secure facility at the end of the avalanche season.

3. Securing weapon to mount during firing season.

AVALAUNCHER

A. Assembly of Rounds

1. Gather the necessary components to assemble enough rounds for mission (primers, caps, nose cones).
2. Round preparation should be done in a controlled environment.

3. Prior to assembly, count out an equal number of powder bags @5, and nose cones.
4. Round assembly.
   a. Inspect primer for correct cap well depth, diameter and for pieces of pentolite in cap well.
   b. Inspect fin assembly making sure all parts are present.
c. Inspect nose cone of primer for proper setting.
d. If assembly rounds are transported, do so with caution. Prior to transport, package rounds so they remain in a stable position.

B. Tower Procedure

1. Clear tower of snow and inspect all equipment.
2. Check range of swivel on avalauncher and adjust braking mechanism used for locking swivel.
3. Quickly release valve on nitrogen bottle to be used and expel a quick blast of gas to ensure a clear opening free of foreign matter. Check threads on bottle for ice.
4. Inspect male gas hose coupling for ice and other obstructions.
5. Prime vessel until flagger valve closes:
   a. Check barrel for ice and assemble into loading tray.
   b. Check that "match marks" on barrel are in correct position in relation to loading tray.
   c. Check vessel for gas leaks. If there is a leak, do not fire the avalauncher until the leak has been fixed.

6. Test fire unloaded avalauncher at 50 psi.

C. Loading

1. Keep number of personnel and ammunition in the area to a minimum.
   a. Single gunner missions are permissible. However, all steps in this procedure shall be followed.

2. Loading:
   a. Done in "horizontal position" or at "elevation position."
   b. Check that safety valve is in the "on" position.
   c. Prime vessel until flapper valve closes (50 lb standard).
   d. Site avalauncher to proper deflection for desired shot.
   e. Slide barrel out of loading tray and lock in position for loading.
   f. Visually inspect that projectile is properly assembled. Place the round in the loading tray, making sure it is properly seated. Remove the cotter pin for the assembly and retain so as to keep track of rounds fired.
   g. Slide barrel down into loading tray. Check that "match marks" on barrel are in correct position in relation to loading tray

105 mm M-326 HEP-T
7.5 lbs. Comp A3

No. of Rounds	TNT *Lb*	Hard Rock *Ft*	Earth Cover *Ft*
100	1,010	23.90	34.32
200	2,020	29.43	43.14
300	3,030	33.23	49.31
400	4,040	36.23	54.22
500	5,050	38.74	58.37
600	6,060	40.91	61.98
700	7,070	42.85	65.22
800	8,080	44.60	68.16
900	9,090	46.21	70.86
1,000	10,100	47.69	73.37

(Figure 11-9)

D. Firing

1. A "safe" first shot (i.e., registered round) must be fired on each mission to indicate if there is any variance in normal weapon behavior.
   a. Shot pressure should be kept above 65 psi to ensure the removal of base plate/arming pin by air friction as round leaves the barrel.
   b. For firing missions involving new platforms, new terrain or new targets, gunners should gather data by aiming low and gradually work shots into desired location.
2. Firing
   a. Raise avalauncher to proper elevation if applicable.
   b. Fill pressure vessel to desired pressure and double check pressure with data.
   c. Recheck deflection and elevation.
   d. Gunner calls out "All Clear."
   e. Gunner calls out "Ready to Fire."
   f. Release safety valve.
   g. Gunner calls out "Fire."
   h. Gunner presses trigger valve down to fire.
   i. Gunner observes projectile flight to observe discrepancies in trajectory and point of impact in case of dud.
   j. Close trigger and safety valve.
   k. Prime pressure valve until flapper valve closes (50 lbs).
3. Post firing mission record:
   a. Date and time.
   b. Who fired the avalauncher.
   c. Shot numbers fired upon, pressure, elevation and results.
   d. Wind and temperature.
   e. Record all duds and any probable causes.
   f. Any additional comments pertinent to mission, i.e., maintenance needs, round flights, etc.
4. Projectiles with fuses shall not be retrieved but destroyed in place.

Section 11B - FIRELINE EXPLOSIVES

Section Contents:

- Fireline Explosives **(Note: fireline certification is provided by US Forest Service Examiners only)**
- EBW Detonator and Firing Set
- Procedures
- Burnol Backfiring Devices
- Animal Carcass Removal
- Boulder Blasting
- Air Gapping
- Expansion Alternatives

General

Fireline explosives are linear explosives that enable crews to construct firelines under certain conditions much faster and with less environmental impact than conventional methods. The quality of line constructed varies from a nearly finished line in light brush or grass fuels, to a lower quality line than required in heavy brush

and slash fuel types. However, even in heavy brush and slash, the cleaning action of explosives can enhance access for and the effectiveness of fire crews who finish the line.

All fireline explosives are tested by the Bureau of Mines to ensure that they will not accidentally detonate under field conditions. They are impact tested to ensure that they will not detonate when paracargoed, even if the parachute fails to deploy. They will not detonate when shot with a 30-caliber projectile, and they will not mass detonate if accidentally caught on fire. Only those fireline explosives that pass the tests, and that are accepted on the qualified products list, can be used for this activity. In conjunction with fireline explosives, the exploding bridgewire detonator (EBW) system is exclusively used to ensure the safest system for building firelines.

Advantages of Fireline Explosives

As labor and overhead costs rise, fireline blasting offers significant time savings. Smaller crews may be used to suppress fires because less cutting and/or digging handline is required, particularly in heavy fuels or ground cover. Increased speed of building the line can save wildland resources. Sometimes smaller crews equipped with explosives can be delivered to a fire faster than larger, conventionally equipped crews.

Other advantages include:

- Brush and other debris (fuel and slash) are scattered rather than piled next to the finished line.
- Mineral soil in the line is loosened and easy to dig for use in hot-spotting; a fine layer of soil dusts fuels close to the line and acts as a retardant.
- Blasting is generally more environmentally sound than using hand tools or dozers.
- Fireline explosives can be paracargoed into extremely remote locations.

Disadvantages of Explosives

Use of explosives for fuels management or wildfire projects can be limited by lack of adequate explosive storage facilities. Personnel using fireline explosives must be carefully selected, thoroughly trained, and specifically licensed for this activity. Transportation and handling demand special precautions.

Fireline Explosives

Fireline explosives are typically a minimum of 50 to 70 feet long, range from 1 1/4 inch to 1 1/2 inch in diameter, and weigh about 60 to 70 pounds when supplied in a cardboard box. Fireline explosives are made and sold as follows:

- PETN explosive cord supplied by Ensign-Bickford.
- Water gel supplied by IRECO or ETI Companies.
- Emulsion supplied by Austin Companies.

Note: PETN explosive cord is typically rigid compared to water gel and emulsion and does not conform to the ground very well. The latter two explosives are very flexible. No end connectors are provided on any of the explosives, so ends are taped (attached) together to ensure propagation from one length to the next.

Note that all fireline explosives are Class A explosives.

PETN Explosive Cord

PETN cord detonates at about 21,000 feet per second at temperatures well below 0 degrees Fahrenheit.

Both versions of the explosive cord come packaged in a fiberboard box measuring 20 3/4 inches by 21 1/2 inches by 12 inches. Each box contains approximately 100 feet of the seven-strand cord, which weighs about 71 pounds, or 175 feet of the four-strand cord, which weighs about 70 pounds.

PETN has an indefinite shelf life.

Water Gel Explosives

Water gel explosives are a slurry type explosive packaged in 50-foot or longer plastic tubes and are supplied on cardboard reels (Figure 11-8).

Water gel explosives consist of oxidizing salts, fuels, and sensitizers dissolved or dispersed in a continuous liquid phase. The entire system is thickened and made water-resistant by the addition of gellants and cross-linking agents. The oxidizing salts are usually selected from ammonium nitrate or calcium nitrate. Aluminum, gilsonite, and oil are frequently used as fuels. Sensitization may be provided by chemical sensitizers such as the nitrate salts of organic amines, nitrate esters of alcohol, perchlorate salts, or small particles of aluminum. Physical sensitization may be provided by entrapped air bubbles, either alone or in combination with chemical sensitizers. Water gels are Class A explosives that detonate at a speed of from 15,000 to 18,000 feet per second. Water gels will not detonate consistently at temperatures below 40 degrees Fahrenheit.

The shelf life of water-gel is about one year although some manufacturers report shelf life as high as five years.

Firing Module

The firing module (Figure 11-12) is separated from the control unit so the operator can detonate the charge at extended distances (500 feet) as required by the size and characteristics of the main explosive charge.

The input to the FS-9 module must be between 32 and 40 volts. This input charges a one microfarad capacitor. When this energy storage capacitor reaches 3000 volts, it is discharged across the "To EBW Detonator Only" terminals of the firing module. By mating the shorting plug to the "Discharge" connection, the energy storage capacitor is completely and immediately discharged, thus precluding inadvertent arming of the firing module and detonation of the EBW detonator. The firing module consists of a completely sealed metal box which includes:

a. Binding posts for connecting the input wires from the control unit.
b. A voltage conversion system to increase the input voltage to approximately 3000 volts to insure proper function of the EBW detonator.
c. An automatic trigger system that discharges when the module contains sufficient energy to fire the detonator (3000 volts, 1500 Amps).
d. An internal discharge capability if a misfire or abort should result.
e. An external shorting capability across the energy storage capacitor by using the same connector or shorting plug as used at the control unit "Safety Interlock" connection.
f. Binding posts for connecting the output wires to the detonator.

Lead Wire

Duplex strand solid core 18- or 20-gauge wires are used as primary and secondary lead wires. The secondary lead wire is a minimum of 500 feet long and a maximum of 2500 feet long. The primary lead wire is a maximum of 100 feet long. The wire should have a slick, tough insulating coat.

Procedures

Communications

The blaster-in-charge will plan communications with a designated blasting team regarding:

- Safety.
- Layout and firing procedures.
- Location of guards and/or flaggers.
- Length of explosive that can be safely guarded and controlled.

The blasting team should have a clear radio channel while in actual operations. Each team member should have a radio. The blaster-in-charge must brief the team to ensure good communications. Some suggested points to be covered are:

1. Packers (packers are also typically guards):
   a. Discuss various methods of explosive deployment.
   b. Do not throw boxes of fireline explosives or handle roughly.
   c. Prior to blasting and hookup of each fireline segment to be blasted, a final check on deployment will be made by the blaster-in-charge or the assistant blaster.

2. Guards (typically also packers):
   a. Assign each guard a number (guard #1, guard #2).
   b. Indicate where each guard is to be located and be sure he or she knows the location (minimum of 500 feet from firing line) (See Figures 11-13 and 11-14).
   c. Cover radio and/or verbal communication techniques that will be used, including the number each guard uses.
   d. Guards should have a good vantage point for observing and listening around the blasting area.

Emulsions

Emulsions are packaged in plastic tubes, however, they are not typically supplied on reels.

Emulsions are the first commercial explosive manufactured with all liquid oxidizers and liquid fuels. The liquid oxidizers are dispersed as microscopic droplets in the liquid fuel. The result is a very intimate mixture of these components, leading to a vastly improved “intimate reaction zone” and a more complete and efficient reaction.

With most emulsion formulations, there is very little change in their viscosity at ambient temperatures down to 10 degrees Fahrenheit, and they will typically detonate at temperatures down to 0 degrees Fahrenheit. They do thin out at temperatures above 100 degrees Fahrenheit.

The shelf life and stability of emulsion explosives is excellent with no change in their explosive properties after one year. (Storage time can exceed two years.) Emulsions are a Class A explosive that detonates at a speed of about 15,000 to 18,000 feet per second.

Safety Tests

The seven-strand fireline cord was originally tested by the Naval Weapons Center at China Lake, California. The cord was subjected to bullet impact, burning, crushing between caterpillar tread and rocks, chopping with an ax on rock, dragging over rough ground, air dropping 500 to 1000 feet, bending, and exposure to retardant—all with no indication of possible hazard. Note, however, that even though safety tests indicate that the cord can be burned, etc., without detonating, there is no guarantee that detonation will not occur.

Water gels and slurries include both cap sensitive and non-cap-sensitive products. A significant advantage of water gels is that they are reliably sensitive to conventional priming methods, yet significantly more resistant to accidental detonation from abusive impact, shock or fire. When subjected to an open flame, water gels will burn but not detonate. In a test conducted by the Canadian Government, an enclosed truck containing five tons of water gel did not detonate when burned. Water gels will not detonate when shot with a 30.06 projectile. Users should, however, recognize that water gels are explosives, and should be treated as such. While specific tests indicate that water gels are relatively safe, severe shocks, such as higher velocity bullets can detonate these products.

Fireline emulsions do not utilize explosive sensitizers, and in reality do not become an explosive until after the addition of "micro-balloons" or air voids. For this reason, emulsions are perhaps the safest explosive, other than water gels, in terms of flame, impact, and friction resistance. Emulsions fail to detonate from impact and friction tests used as the standard throughout the industry, including the bullet impact test. Independent studies done to determine at what severe conditions explosives will detonate, clearly show emulsions have a higher degree of resistance to detonation from impact than either slurries or dynamites. However, emulsions are explosives that are designed to detonate. The relatively safe emulsions demand respect and the proper handling requirements afforded to all explosives.

Safety testing of all approved fireline explosives is conducted by the Bureau of Mines, Safety Testing Laboratory, Pittsburgh, Pennsylvania. These tests are designed to show that approved fireline explosives meet or exceed the safety characteristics of the seven-strand PETN cord.

EBW Detonator and Firing Set

The FS-9 Exploding Bridgewire (EBW) firing system (Figure 11-9) is designed to generate and deliver an electrical energy pulse to reliably fire exploding bridgewire detonators. Electric blasting caps (EBC) are not used with this system The FS-9 EBW firing system is to be used exclusively with fireline explosives

EBW Detonator

The EBW detonator (Figure 11-10) is an alternative to the common electric blasting cap. While similar in construction, the EBW detonator is characterized by the exclusive use of secondary explosives that will not detonate when exposed to heat, friction, fire, static electricity, low voltages, or radio transmission. EBW detonators are rated "Class C" explosives and have less restrictive shipping regulations than conventional blasting caps. EBWs, however, are required to be stored in the same way as conventional caps.

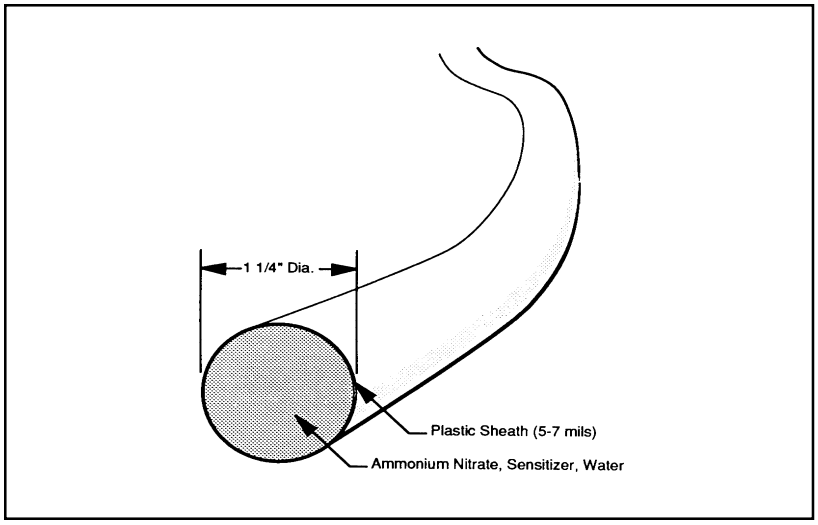

(Figure 11-8) Construction of a typical water gel explosive tube..

The purpose of the FS-9 control unit (Figure 11-11) is to provide low voltage (40 volts DC) electrical energy to the firing module and to ensure a safe and reliable operation sequence for the firing of the EBW detonators.

This output occurs when both the "Hold-to-Arm" and "Hold-to-Fire" buttons are simultaneously pressed and the shunting plug is mated into the control unit "Safety Interlock" connection. The "Battery OK" lamp will illuminate when the "Hold-to-Arm" button is pressed, only if the batteries are above 32 volts. When the "Hold-to-Fire" button is pressed in conjunction with the "Hold-to-Arm" button, the voltage is then applied to the output terminals and the ready lamp will illuminate. At this time, the firing module, if connected, will begin arming and automatically fire within two to eight seconds. To abort the firing while arming is taking place, merely release the "Hold-to-Arm" or "Hold-to-Fire" or both buttons before detonation occurs.

The FS-9 control unit consists of the following items:

a. A shorting plug that precludes arming of the system until mated to the control unit "Safety Interlock" connection.
b. Dual pushbutton or toggle switches for firing.
c. Ready-to-fire lamp indicator.
d. Internal batteries for supplying the electrical energy.
e. A battery charger that operates from 110 volts AC line voltage.
f. A battery check lamp allowing verification of adequately charged batteries.
g. A sealed case for carrying and transporting the firing system.
h. Fuse to protect the system circuitry.
i. Wire screw plugs for wire connection.

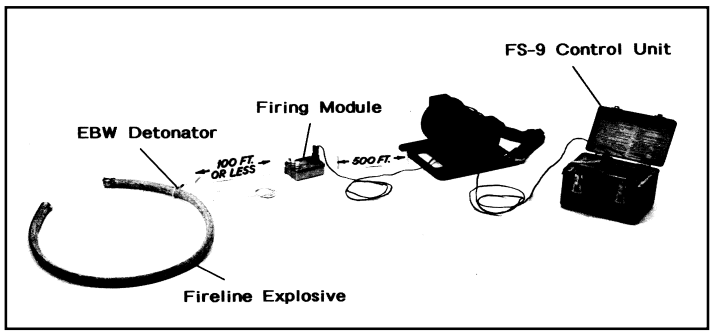

(Figure 11-12) Exploding bridgewire firing system

The blaster-in-charge must have all EBW detonators and the control unit under personal control during all blasting operations.

There are two methods of deployment: 1) The carton or reel of explosives can be carried and the end of the cord held stationary; or 2) The carton or reel can be held stationary and the cord pulled from the reel or box. After deployment, the ends of adjacent cords are overlapped 6 inches to 8 inches and attached (taped) together (Figure 11-15).

When properly attached, any number of cords can be fired with a single detonator. The number of cord lengths per blast or shot will be determined by the blaster-in-charge.

The explosive is most effective when placed on or near the ground and under downfall. Large logs can be sawed, wrapped with the explosive, or left for later sawing.

After the explosives are placed, the blaster-in-charge, through a designated assistant, if necessary on large layouts, shall assure that the cord is properly positioned, and all joints are securely taped, tied, or clamped together. The assistant blaster should then move to a position at least 500 feet beyond the end of the fireline cord. The blaster-in-charge must also be at least 500 feet from the charge.

The assistant blaster and any guards shall be a minimum of 500 feet from the explosive and guard the area from all intruders from any direction. Guarding the area is most critical to the safety of the operation because inadequate guarding is the most common cause of explosive-related accidents.

The blaster-in-charge must positively determine that all guards are properly placed, all other crew members are in a safe area, and that the blasting zone is clear of all personnel for at least 500 feet. Care should be exercised when selecting safe areas to ensure adequate protection from flying objects, falling rocks, tree limbs, and objects that might ricochet.

Detonator Connection Sequence

Check the continuity of the secondary lead wire (low voltage) with the galvanometer. This is done by stripping about two inches of insulation from the wire, shorting one end of the lead wire, and touching individual wires at the other end to the poles of the galvanometer (See Figure 11-16).

The EBW detonator lead wire need not be shunted during shipping or while performing the hookup procedure. Check the continuity of the EBW detonator with the galvanometer. Connect he detonator to the primary high voltage lead wire. (This is done by placing a lead wire and a detonator wire parallel to one another, then making a loop.)

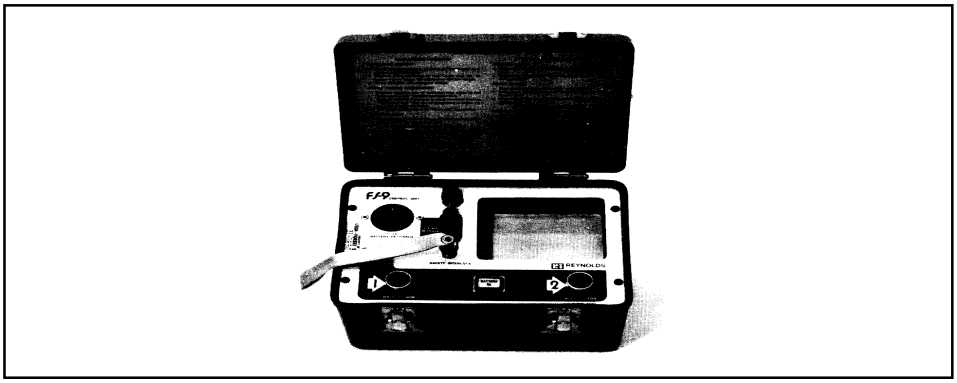

(Figure 11-13) Control unit

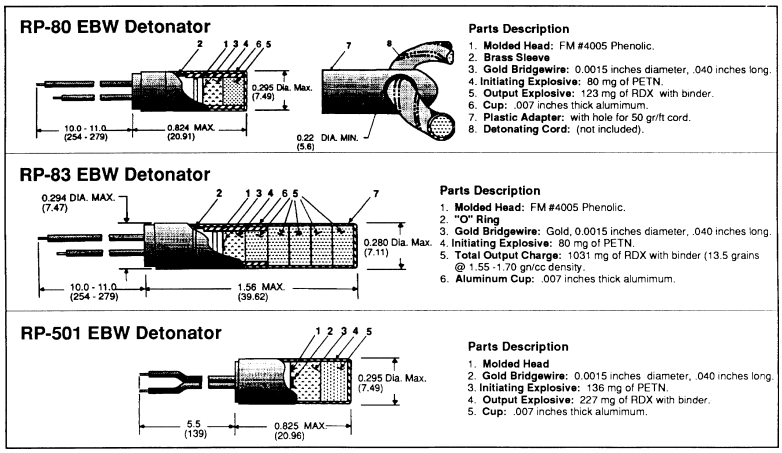

(Figure 11-14) Exploding bridgewire detonator

Check with guards by radio. If safe to continue, yell "Fire in the Hole" or "Fire One" (first call).*

*In Alaska and some other locations "Blasting One," "Blasting Two," and "Blasting Now" are substituted for "Fire in the Hole" or "Fire One."

Attach the detonator to the explosive. (This is typically done by inserting the cap into the explosive with the end of the cap pointed in the direction that the explosive was deployed (Figure 11-17).

When using the RP-80 directional detonator and a seven-strand detonator cord, place the detonator perpendicular to the fireline explosive (Figure 11-18). Tape the detonator into place so it cannot be dislodged, or tape securely to outside. Be sure that the wire leads do not touch each other or any other materials such as leaves and grass. Move to the module.

Connect the secondary lead wires coming from the firing module to the FS-9 control unit. (There are two wire screw plugs where these will be connected).

Check with guards by radio. If all clear, yell "Fire in the Hole" or "Fire Three" (third and final call).

Insert the shunting plug into the safety interlock provided on the control unit. (Shunting plug must be plugged in or the entire system will not work.) Depress the "Hold to Arm" button. The "Battery OK" light should illuminate within two seconds.

Simultaneously activate the "Hold to Arm" switch and "Hold to Fire" switch. When both are activated, the "ready" light will illuminate. Detonation will occur between two to eight seconds from the time both switches are activated.

Post-fire Procedures

Remove the shunting plug from "Safety Interlock" connection on the control unit. This renders the control unit inoperable.

Call the end guard at the far end of the line. Tell the guard to check that end to see if detonation was complete.

Note: The end guard is the only other person, besides the blaster-in-charge, cleared to enter the blast site at this time.

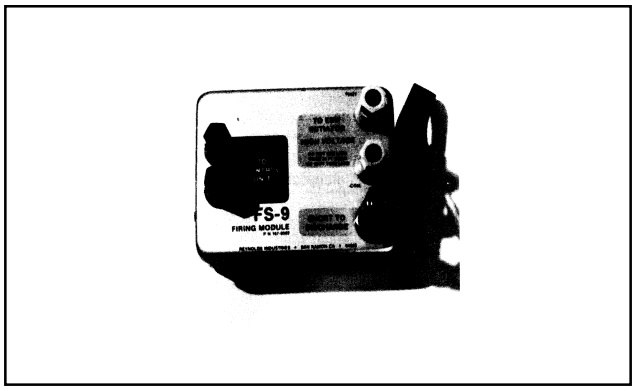

(Figure 11-15) FS-9 control unit

Disconnect the lead from the the terminal marked "To Firing Module" at the control unit. Short the lead wires together for future electrical continuity checks and move to the firing module. Be sure to take the shunting plug.

Insert the shunting plug into the “Safety Interlock” connection on the firing module. This renders the firing module inoperable and bleeds off any excess electricity.

Disconnect lead wires from the terminals marked “To Control Unit” at the firing module. Disconnect lead wires from the terminals marked “To EBW Detonator Only” and move to the fireline.

Check to make sure all the explosives have detonated and check with guard at the far end of the line to confirm that all of the explosives detonated at that end. Radio all guards that it is clear to enter the blasting area.

If the guard on the far end of the line finds undetonated explosives, keep all personnel out of the area and notify the blaster-in-charge. The blaster-in-charge will walk the line and determine why the explosive did not detonate. If the cause is an improper connection, attach a new cap to the end of the explosive and detonate it using the same procedures previously outlined.

If the explosive is burning, clear the area and wait until it has burned out. Before proceeding, the end guard will secure the approval of the blaster-in-charge and check again to be sure conditions are clear before allowing the crew to return.

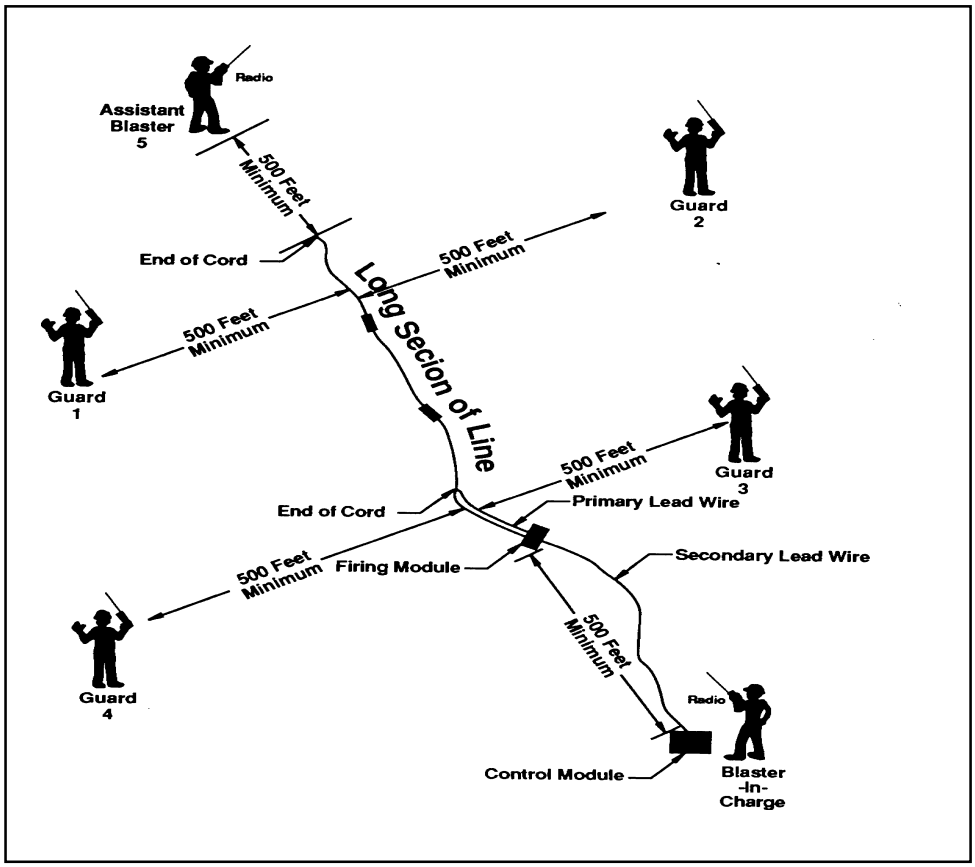

(Figure 11-16) Example of explosive layout and placement of guards.

Misfire Procedures

In the case of a misfire, the detonator received either insufficient energy or an energy pulse with an incorrect rise time or frequency pulse. On rare occasions, the cause may be a faulty detonator. If the initial energy pulse is insufficient to break the bridgewire, the detonator may not be accidentally detonated. It is safe to handle immediately and is not hazardous in this condition. The only possible hazard is the fireline explosive. Once it has been established by the blaster-in-charge that it is safe to proceed to the explosive, the following procedure should be used:

1. Remove the shunting plug from the "Safety Interlock" connection at the control unit.
2. Recheck the batteries and fuse. If the fuse is blown, the wires between the control unit and the module could be shorted. Correct this condition, replace the fuse, and restart the firing procedure. If this is not the case, disconnect the wires at the control unit from the terminals marked "To Firing Module" and shunt them so the continuity can be checked at the firing module.
3. Return to the firing module with the blasting galvanometer and shunting plug.

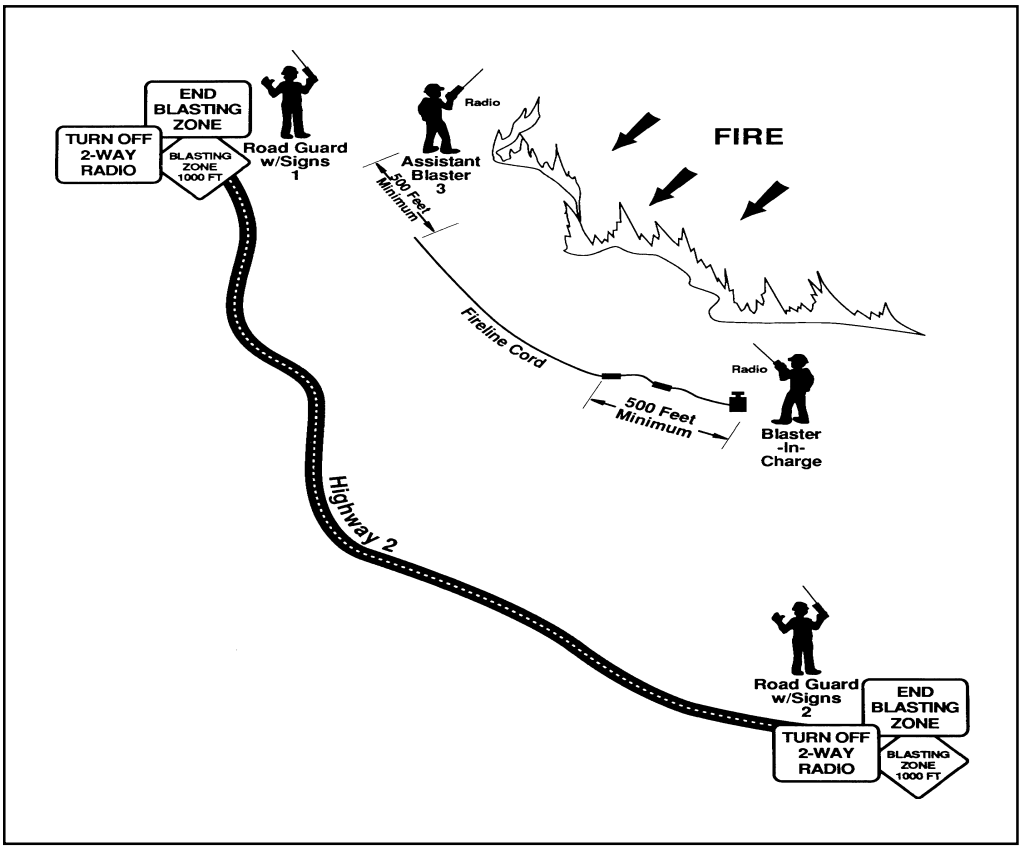

(Figure 11-17) Example of placement of guards when blasting close to roads or any public facility. Guards are numbered by blaster-in-charge

4. Disconnect wires at the firing module from the terminals marked "To Control Unit" and check for continuity. If continuity is not indicated, determine where the wires are broken and repair or replace. Then restart the firing procedure.

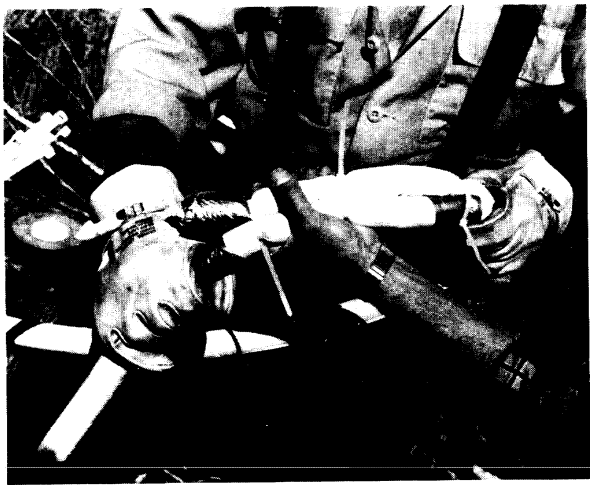

(Figure 11-18) Splice on fireline explosive

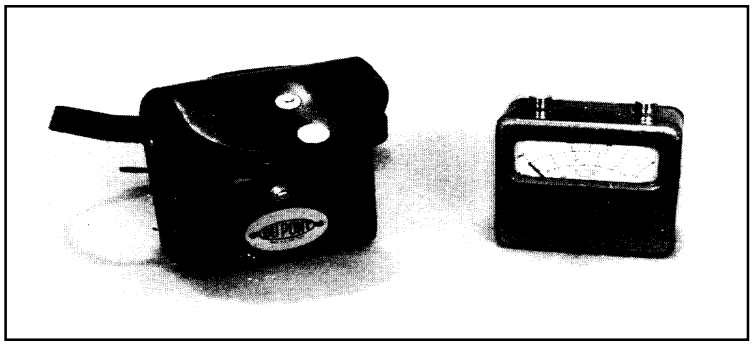

.

5. Disconnect wires at the firing module from terminals marked "To EBW Detonator Only" and check for continuity. If continuity does not exist, the electrical pulse did not reach the detonator and either the lead wires are broken or the detonator is faulty. Shunt the lead wires at the firing module.
6. Return to the detonator. Disconnect the detonator and check continuity of both the detonator and lead wires. Replace either item if continuity is not indicated. During this procedure, if all components appear normal, replace the detonator and the primary lead wire from the detonator to the firing module. The most likely cause of a failure is within the twin lead wires because of the high voltage of the firing pulse.

An additional check may be performed on the primary wire. If the insulation is damaged on the wire from the firing module to the detonator, the firing pulse may arc across these points or to the ground, causing an insufficient energy pulse to reach the bridgewire in the detonator. It is a good practice to check both the secondary and primary lead wires for breaks when coiling them. When setting up, the blaster can let the wire run through either hand while walking along the line. Breaks in the insulation can often be felt in this manner, then repaired or replaced.

Other Considerations

If a portion of the explosives did not detonate, and if it is not threatened by fire, cut off any mangled or otherwise damaged explosive material and attach it snugly to the good cord a foot or more from the cut end. Place a new detonator in the cord and go through the firing procedure.

If for some reason it is impractical to shoot a failed portion of explosive material, it can be placed in one of the original boxes and returned to the magazine. If this is done, be sure to make the person in charge of the magazine aware of it.

If you have explosives in a vehicle on a return trip, be sure to leave the explosive placards in place. If you have no explosives other than detonators, placards must be removed from the vehicle before starting the return trip.

Remember to return any remaining explosives including detonators to an approved magazine, and see that any needed corrections are entered in the magazine inventory. Maintain a shot log or blasting record showing the date and time of each blast and the amount and type of explosive used.

BURNOL BACKFIRING DEVICES

General

a. Burnol backfiring devices (Figure 11-19) consist of a metal canister of gelled flammable material and a cap, fuse, and ignition system with additional ignition material in a plastic container around the cap.

b. Burnol is a useful burning tool, but it has an explosive device (blasting cap). It is potentially hazardous if misused. Because these devices are commonly used by fire management personnel who do not normally work with explosives, it is very important that they be properly trained in the safe use of the product.

Storage

a. Storage of Cap-and-Fuse Assembly - Ignitor shall not be installed on cap-and-fuse assembly in storage.

b. Permanent Storage - Storage shall be in accordance with Chapter 3 of this guide. Storage must be in type one or two magazine and inspected once every seven days.

c. Temporary Storage - With road access, Burnol backfiring devices must be stored in a type 3 magazine and must be attended. Without road access, store in accordance with Chapter 3.

d. Grenade Features - Ignitor shall not be installed on the fuse before shipment. Shunted cap and fuse assembly shall be used.

Transportation

a. Transportation shall be in accordance with 49 CFR and Chapter 4 of this guide.

b. Vehicle shall be driven by qualified driver as defined in Chapter 4 and shall not be left unattended.

c. Cap-and-fuse assembly shall be in portable magazine or IME container.

d. Vehicle shall be placarded only when transporting more than 1000 devices.

e. Vehicles transporting explosives shall be equipped with two 1-BC or larger fire extinguishers.

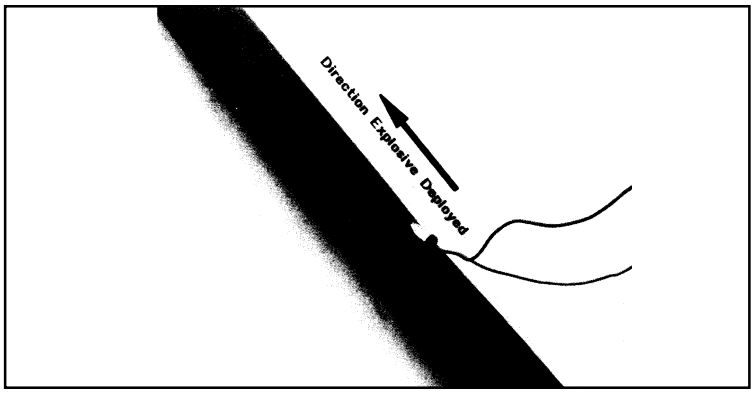

(Figure 11-19) Splice on fireline explosive.

Use Procedures

a. Users shall be certified NPS blasters.

b. Cap-and-fuse shall be installed on the device at the work area.

c. The ignitor shall be installed on the fuse at the shot point when the user is ready to throw the device.

d. The user shall install the ignitor, activate it, and throw it immediately.

e. Misfires will not be retrieved for at least 15 minutes.

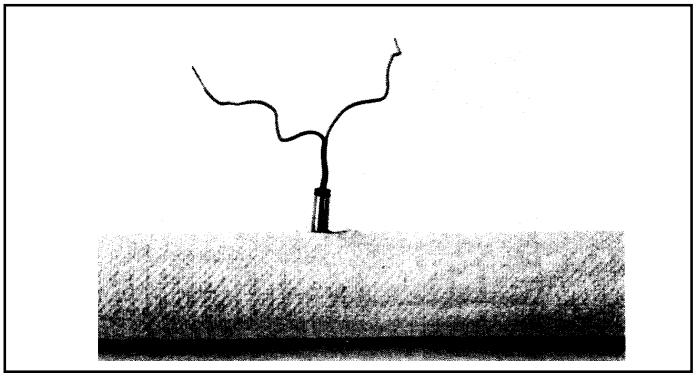

(Figure 11-20)

ANIMAL CARCASS REMOVAL WITH EXPLOSIVES

Various patterns of charge placement are used, depending upon the size of animal carcass to be removed. For instance, 20 pounds of Kinepak or 60 percent gelatin may work on a horse weighing under 1000 pounds, but will prove inadequate for an animal weighing 1400 pounds. In general, desired explosives properties for animal removal include:

a. Mid- to high-level density explosives.

b. A velocity over 16,000 fps.

c. Total charge weight range of a minimum of at least 20 pounds for horses weighing under 1000 pounds (and bears under 400 pounds) up to 50 pounds (or possibly more) for larger carcasses. (Top loading the body and head of the animal may be necessary to assure complete shredding of the carcass.)

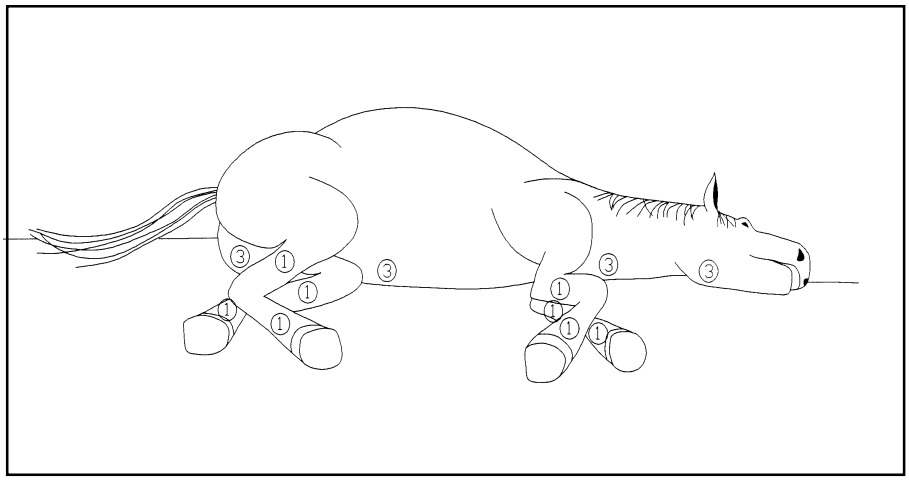

(Figure 11-12)

Following is one basic pattern of charge placement:

1. Each set of charges must be placed under the carcass.
   a. Four locations: three pounds each, under the main mass.
   b. Each leg, two locations: one pound each, detcord wrapped around each charge.
   c. Legs could be packed with water bags.
   d. Horseshoes should be removed for safety.

2. Charges could be put in place and the carcass then rolled over on top of them.

3. Approximately 20 pounds explosive, 12 caps, and 20 to 30 feet detcord.

MECHANICAL ASSIST: NON-DETONATING ROCK BREAKING TOOL

Function of the Tool

The non-detonating rock breaking tool can do anything a small diameter blasthole charged with conventional explosives can do, but in a safer and much more controlled manner. The greatest difference seems to be that it splits the material rather than shatters it. It will break reinforced concrete and boulders, or the rock ledges and shiners encountered in excavation projects, with the energy that is contained in one or several shotgun shell size cartridges. Caution: Even though this product does not represent a 'detonation process' great care must be taken to protect crews and equipment from fly-rock potential.

Principle of the Rock Breaking Tool

This device works on the principle of breaking rock (or smaller materials) with tension, through energy transfer to non-compressible water, from rapidly expanding gas pressure. In conventional breaking with chemical explosive, the energy developed in the reaction (the explosion) continues until the chemical products are consumed, even after its work is finished. If there is more energy available than needed to split or break the

material, the continued gas expansion can result in excessive shattering, movement and throw.

The difference in the non-detonating rock breaking tool technology is that, upon initiation, all the propellant's energy is transferred completely to the column of water in the drill hole. Then, because water cannot be compressed, it is driven and wedged like a solid into the existing micro-cracks in the rock or concrete. Once the material splits, the confinement forces acting on the water are relieved, and the residual energy in the water dissipates harmlessly. The result is splitting and breaking without excessive fragmentation, scatter, or noise.

Benefits of the Rock Breaking Tool

Since this system breaks material with a negligible amount of flyrock, no noxious fumes, and almost no ground vibration, it allows rock to be broken in the most restrictive circumstances. For example, it can be used to break oversize rocks in the jaws of a crusher or on a grizzly without risk of damaging the equipment. In addition, it is used in very tight excavation situations where explosives are not allowed or are inappropriate; and where it is not possible to use hydraulic demolition hammers.

With this tool, hard excavation near sensitive objects including high pressure gas lines, telephone, power or optic cables, in or near buildings, and in crowded construction sites can be done safely and quickly.

Best of all, there are not any restrictive regulations affecting the storage, transportation, or use of the tool or the cartridges.

Who Can Use the Rock Breaking Tool

Any good worker with a grasp of the safety aspects of the tool and an understanding of its basic principles can operate it. An explosives users license is not required. Federal agencies (DOT and BATF) determined that the device and the cartridges, when used properly, did not pose any significant threat to the health or safety of the users or the general public.

The cartridges were placed in the same category as nail gun cartridges. This is classed as a hazardous material (Explosive 1.4S-UN0323), but it is judged to present a minimum hazard during transport and storage. The cartridges and the tool can be shipped within the United States by common carrier, including UPS (air).

Use of the Non-detonating Rock Breaking Tool

The application of this technology is simple:

1. Drill a 1 1/2" hole; fill it with water.
2. Drop one or more booster cartridges in the water, place the device in the hole, and place a mat or some sandbags over the device.
3. Load the primer cartridge and set it off mechanically by pulling a lanyard from a distance of 21 feet from the rock when the device is used.

Depending upon the breakability of the material, a hole can be drilled in from the edge or face (burden) at any distance ranging from a 1 1/2 feet, to as much as 4 feet.

Best Use of the Rock Breaking Tool

The type of work required will dictate the proper method for using the non-detonating rock-breaking tool. In general, the procedures include either breaking or splitting an entire unconfined mass, such as an exposed surface boulder, or precisely breaking pieces from a confined or partly covered object for a particular purpose, such as completing an excavation or opening a trench.

When an unconfined rock needs to be split, a hole should be drilled to a point that is just beyond the center of the mass. The tool can then be used to reduce it to several pieces. If the size of the entire mass cannot be determined, such as when bedrock or large rocks are encountered in an excavation, then the hole

needs to be positioned and drilled deep enough so that the proper sized piece of material will be broken or split from the edge.

Booster Cartridges

For larger boulders and rocks, booster cartridges are available. The in-hole boosters allow the user to adjust the amount of energy to match the strength or the size of the material to be broken.

Two different booster cartridges are available. The smaller cartridge contains 10 grams of propellant while the larger contains 15 grams. A maximum of up to three booster cartridges may be dropped into the water-filled hole before inserting the breech body. Several simple methods can be used to space the cartridges evenly along the length of the hole for better results. In a situation where the rock or boulders are porous, or cracked and will not hold water, a thickening agent or gel is effective.

Reinforced Concrete

The non-detonating rock breaking tool can be used to weaken heavily reinforced concrete to expedite removal with mechanical demolition tools.

Example: A pattern is drilled to 80 percent of the depth of the concrete (about five feet deep for a six-foot thick mass). A small the hydraulic demolition hammer finishing the work. Overall time to do the work is significantly reduced, resulting in substantial savings.

AIR GAPPING

Definition of Air Gapping

In order to crack a rock with a minimal amount of explosives the air gapping method may be used. This technique requires that a hole is drilled three-quarters of the way through a boulder that is positioned on a surface or at ground level with no confinement. Depending on the size, there may be one or five to six holes located in strategic places determined by the blaster.

Only one hole is loaded; the additional boreholes are for a relief effect. The desired outcome is to produce no flyrock and reduce the size of the boulder to remove it more easily by hand or with equipment. Only one borehole may be used if the boulder is two cubic yards or less in size.

Characteristics of Air Gapping

In air gapping, there is a minimal amount of powder used to break a rock without producing flyrock or damaging surrounding environments or structures. This method does not work well with buried rock, since it has no place to expand and crack. Rock should be above ground, with no confinement. Possible hazards include: spacing holes too closely together; overcharging, which could create flyrock; fumes, and static electricity.

Powder Type and Caps: Stick powder, emulsion, water gels, or two-component explosives according to the type of rock to be blasted. Any type of authorized cap is acceptable.

Procedures

Air gapping works best by drilling a hole slightly larger than the size of powder that will be used, three-quarters of the way through the rock. Angles should be as vertical as possible. Powder factor varies (dependent upon the size of the target or rock) per yard of boulder.

Insert powder halfway down the borehole using, in general, six-ounce cap wires to hold it in place, stemmed with a rag and/or a mud cap. Electric caps are detonated instantaneously. Another air gap application includes pouring water into the borehole to enhance the confinement and hammer effect, after the explosives have been

placed.

EXPANSION ALTERNATIVES

Expanding Grout

Expanding grout is a soundless and safe demolition agent that is quite different from ordinary demolition agents such as explosives and other dangerous materials. It does not cause any flyrock, noise, ground vibration, gas, dust, or any other environmental pollution when used properly.

As requirements for demolishing rock and reinforced concrete in construction increase in tight quarters, the use of explosives and explosive agents becomes more restricted in regard to safety and environmental pollution problems.

When expanding grout is mixed with an appropriate amount of water and poured into cylindrical holes drilled in rock or concrete, it hardens and expands. The grout cracks the matter to be demolished, allowing for easy removal with a pick breaker, pneumatic breaker, excavator, etc.

There are currently four grades of expanding grout on the market designed for various temperature ranges of material to be cracked. Since a chemical reaction of expanding grout depends on temperature, use the proper type of material.

Advantages of Expanding Grout

Safety - Expanding grout is not controlled by any legal regulation such as explosives and explosive agents, etc. Specific qualifications are not required for handling. Demolition can be performed anywhere, easily and safely.

Noise - Expanding grout is a soundless cracking agent. Unlike the existing methods of demolition, it does not make any noise, vibration, flyrock, dust or gas. Rocks and reinforced concrete may be demolished safely without environmental pollution. Furthermore, the grout's expansive stress continues even after crack initiation and the crack opening distance becomes wider as time passes.

Handling - No lid (or cap) is necessary after expanding grout is poured into a hole of rock or reinforced concrete, nor is tamping required as with explosives. Expanding grout exerts its strength in a short time. Due to the grout's strong adhesion and frictional resistance to inner surface of the hole, spurs due to heat-generation (blown-out-shot) do not occur when used within the parameters as noted in the conditions. The expansive stress along the hole depth is almost constant except for that near the entrance of the hole. Generally, the expansive stress loss from the hole entrance has little effect on the demolition work when hole depth is long.

Expansive Stress - Expanding grout has an expansive stress of more than 6000 t/m2. In general, the compressive fracture stress of rocks is 1000 to 2000 kg/cm2, while that of concrete is 150 to 500 kg/cm2. However, the tensile fracture stress is very small, i.e., it ranges from 40 to 70 kg/cm2, respectively. Since demolition is based on a fracture due to a tensile stress, all types of rocks and concrete can be cracked and broken when appropriate holes are properly drilled.

Properties of Expansive Grout

Chemical Components - Expansive grout is a powder consisting of an inorganic compound comprised mainly

of a special kind of silicate and an organic compound. It does not contain any harmful components.

Effects on Expansive Stress - The expansive stress of the grout increases more than 6000 t/m2. The larger the hole diameter is, the greater the expansive stress becomes. There is little change in the expansive stress when the water ratio is approximately 30 percent. However, the stress is decreased as the water ratio is increased or decreased.

Fracture Mechanism

After the grout is poured into holes drilled in rocks or concrete, the expansive stress gradually increases with time, and reaches to more than 6000 t/m2 at room temperature after 24 hours. As the product generates its expansive stress, the material to be cracked undergoes a process of (1) crack initiation, (2) crack propagation, (3) the increase of crack width. Therefore, this fracture mechanism is distinguished from a breakage by blasting.

Cracks initiate from an inner surface of the hole and are caused by tensile stress at a right angle with the compressive stress which occurs by the expansive stress of Bristar. The expansive stress continues even after the appearance of cracks. The cracks propagate and new cracks also initiate during the process. Usually, for a single hole, two to four cracks initiate and propagate. When a free surface exists, the crack is pushed apart by the shear stress and a secondary crack also arises from the bottom of the hole running toward the free surface.

Test Break and Drilling

The effectiveness of expanding grout depends on the placement of the holes. The drilling must be done in relation to the job to be performed.

Test Design and Breaking - The design for breaking should be done according to the properties of rocks, joint, volume to be removed, secondary breaking, and work period, etc.

To determine which combination of hole size and spacing is most desirable, drill several holes of different diameter at different burden and spacing. Check each of the break conditions, and then decide hole diameter, depth, burden and spacing.

Drilling - Drilling machine: Use electrical drill, rock drill, or crawler drill. Drilling direction: It is preferable to drill holes vertically, but in cases of a wall or pillar of reinforced concrete where vertical drilling is hard, an inclined hole may be drilled. Since a greater effect is achieved with a deeper hole, in case of a thin material, consideration should be given to achieve a long hole depth by drilling it obliquely if necessary. Horizontal holes require the same spacing as vertical holes.

Hole Diameter and Hole Spacing - In general, the preferable hole diameter is from 40 to 50 mm (1 1/2” x 2”).

Hole Depth - This varies with the shape of the material to be cracked or the break plan. It should be noted that Bristar mixed with water can easily be applied by hand when the hole depth is up to approximately 10 meters. When the hole depth is less than three times the diameter of the hole, less cracking will occur. The breaking effect is lessened and the time required for demolition is increased.

Use of Thin Steel Pipe - In the case of a temporary concrete structure (to be demolished), place thin steel pipes (the thickness: 0.8mm (1/32”) i.e., a sheath pipe for P.S. concrete) as holes before placing concrete—instead of drilling. Whenever the structure needs to be cracked, fill Bristar in the pipes. There is no change in breaking effect by the use of pipe.

Mixing and Filling Expanding Grout

Mixing - Mix one bag (5 kg, 11 lb) with water at a time by hand or preferably with a mechanical mixer. Prepare the following equipment:

Container - For one bag, a metal bucket or clean can of 10-20 liters capacity.
Mixer - For instance, a hand-mixer.
Water meter - Beaker or measuring cylinder.
Protector - Rubber gloves, safety goggles.

Mixing Method - Pour approximately 1.5 liter (0.4 U.S. gallon) of water into container. Gradually add one bag of Bristar, and mix well until a good fluidity occurs. When the viscosity of the mixture of expanding grout and water is too high to pour into the hole, add a little water to get a good fluidity. Do not exceed 34 percent of water ratio (1.7 liter; 0.45 U.S. gallon per 5 kg; 11 lb).

The mixing time by hand-mixer is about 2-3 minutes. (It is recommended that a mechanical mixer be used on large volume jobs.). When mixing by hand, wear rubber gloves. Always use clean mixing water.

Standard Quantity - The quantity of Bristar to be used for cracking differs with the hole spaces and diameters.

Filling of the Hole with Expansive Grout - Expansive grout should be poured into holes within 10 minutes after mixing with water. Grout may set up within 10 minutes, losing its fluid properties and becoming difficult to pour. Once its fluidity is gone, the grout should not be diluted by re-mixing with water, since its strength is greatly reduced.

Expansive grout is best placed using a bucket with a pour spout, caulking gun, or grouting pump, especially for a horizontal hole. Try to drill horizontal holes with some slope to help in filling. Grout must be poured into a hole to the brim. A horizontal hole can be plugged easily with grout as it reaches a clay-like consistency as it starts setting up. A slight slope makes use much easier.

The average quantity of grout used per one cubic meter is 5kg for the material to be broken when working at in untouched rock (8, 4 lb/yd3). For fragmentation and reinforced concrete, an amount of two to four times of that is required.

Use of Polyethylene Sack in the Hole

If there is water in the hole, place a polyethylene thin sack equal to the hole diameter into the hole, insert a wooden rod into the bag, and then fill grout into the sack. The grout in the sack will displace the water in the hole. There is no change in the breaking effect by the use of this kind of sack.

When there are many joints or large voids in the material to be cracked, or when grout somewhat leaks from the hole, use the sack. When much water of the slurry is absorbed to the material to be cracked (i.e., a dry concrete), use the sack, or spray water into the hole. In freezing temperatures, avoid using water.

When material to be cracked is in water, try to use the bucket or the pump when filling into the pipe. Remove it and then tie the sack to avoid grout-filled diluting. If there is no flow of water around an entrance of the hole, expansive grout may be directly poured into the hole using the pump, and should gently displace the water in the hole.

After Treatment

Tamping with mortar or sand is not required after the filling of grout. It is not necessary to put on any restrictive cap either. Simply leave the grout, and wait until a crack initiates. Covering the filled hole with a plastic cover is desirable to avoid dilution of grout from an external water source until cracking starts.

Spraying the surface with water after the cracks initiate tends to increase the width of cracks and speed the cracking process.

Time Required for Crack Formation

The time required for crack formation in material at 20 degrees C (68F) is about 10 to 20 hours. The lower the temperature the longer crack formation takes. The crack width for rock continue to increase with time and can become 10 to 30mm (3/8" to 1 1/8") after several days, depending on free surfaces available. It is best to wait until the grout has worked to full depth before removing rock as premature removal at the first sign of a crack can hamper the leverage effect of expansive grout.

Containers and Storage

Expansive grout is packed in four anti-moisture bags of 5 kg (11 lb) each and then placed in a waterproof carton with a total weight of approximately 20 kg (44 lb)

Although grout is packed in anti-moisture paper bags, prolonged storage may cause deterioration of its working ingredients. Therefore, store grout in a dry place and use it as soon as possible. When storing, do not place the bags of grout directly on floor. Put them on a pallet and keep the bags in a dry warehouse. Stored in this manner, grout can be effectively used for about one year.

Grout should be unpacked before use. When storing the remaining portion of grout, push the air out of bag, then seal it with gum tape and use it as soon as possible. However, since it may be exposed to moisture, there is risk of the grout losing its effectiveness once the bag has been opened. If broken bags of grout are received, they may not function due to moisture absorption.

Precautions

Do not use grout for other purposes besides the cracking of rocks or concrete. Rinse with water any portion of the skin that comes in contact with grout. Wear rubber gloves and safety goggles when mixing and filling.

To avoid shattering of containers, do not pour and leave grout in bottles or cans. Do not look directly into any holes for at least six hours after pouring. Grout may splatter or blow out of the hole due to heat generation when the temperature of the material to be broken is overheated. Never use hot water with expanding grout.

Common Uses

A variety of applications commonly employ nonexplosive demolition agents such as expanding grout.

Bridge Piers and Caps	Boulders	Concrete vaults
Foundations	Pre-Splitting	Bridge columns
Machinery Bases	Trench Rock Removal	Concrete slabs
Building Walls	Tunneling	Sea walls
Bridge Abutments	Shafting	

TERMINOLOGY

A GLOSSARY OF FREQUENTLY USED TERMS IN EXCAVATION AND BLASTING

AIR BLAST - An airborne shock wave resulting from the detonation of explosives. May be caused by burden movement or the release of expanding gas into the air. Air blast may or may not be audible.

AIR GAP - A blasting technique wherein a charge is suspended in a borehole, and the hole tightly stemmed to allow a time-lapse between detonation and ultimate failure of the rock (no coupling realized).

AMERICAN TABLE OF DISTANCE - A quantity-distance table published by IME as *Pamphlet No. 2*, which specifies safe explosives storage distances from inhabited buildings, public highways, passenger railways, and other stored explosives materials.

AMMONIUM NITRATE (AN) - The most commonly used oxidizer in explosives and blasting agents.

ANFO - A blasting agent consisting of ammonium nitrate prills and fuel oil.

APPROVED EXPLOSIVES - Explosives approved by NPS Washington D.C. Blasting officer as outlined in *NPS-65*.

APPROVED STORAGE FACILITY/MAGAZINE - A facility for the storage of explosives materials conforming to the requirements in *TITLE 27 CFR, PART 55, Explosives Materials, Regulations, Subpart K, Storage; Bureau of Alcohol, Tobacco, and Firearms* (BATF).

BACK BREAK AND BACKSHATTER - Rock broken at the hole collar beyond the limits of the last row

of holes. In shallow holes, it is often called cratering.

BATF - Bureau of Alcohol, Tobacco, and Firearms, U.S. Department of the Treasury, which enforces explosives control and security regulations.

BEDS OR BEDDING - Layers of sedimentary rock, usually separated by a surface of discontinuity. As a rule, the rock can be readily separated along these planes.

BENCH - The horizontal ledge in a quarry or mine face, or in a road or trail cut, along which holes are drilled vertically. Benching is the process of excavating whereby terrace or ledges are worked in a stepped shape. Benching is also the horizontal surface of bench cuts in road and trail construction.

BLAST - The operation of rending (breaking) rock by means of explosives. Shot is also used to mean a blast.

BLAST AREA - The area near a blast within the influence of flying missiles, or damage-level concussion.

BLASTER-IN-CHARGE - A qualified person in charge of a blasting operation. Also, a person who has passed a test, approved by *NPS-65*, which certifies his or her qualifications to conduct and supervise blasting activities.

BLASTING AGENT - Any material or mixture, consisting of fuel and oxidizer, intended for blasting, not otherwise defined as an explosive, provided that the finished product, as mixed for shipment or use, cannot be detonated by means of a No. 8 test blasting cap when unconfined.

BLASTHOLE - A hole drilled into rock or other material for the placement of explosives.

BLASTING MAT - Used to cover a blast to hold down any possible fly material (debris); usually made of woven wire rope or cable, rope, or rubber.

BLASTING GALVANOMETER - A measuring instrument containing a silver chloride cell and a current-limiting device which is used to measure resistance in an electrical blasting circuit. Only a device specifically identified as a blasting galvanometer, blasting ohmmeter, or blasting multimeter shall be used for this purpose.

BLOCKHOLE - A hole drilled into a boulder to allow the placement of a small charge of explosives to break the boulder.

BOOSTER - A chemical compound used for intensifying an explosives reaction. A booster does not contain an initiating device, but must be cap sensitive. Usually of high velocity and density.

BOOTLEG - That portion of a borehole that remains relatively intact after having been charged with explosives and fired. A situation in which the blast fails to cause total failure of the rock due to insufficient explosives for the amount of burden (also called shotgunning), or caused by incomplete detonation of the explosives.

BOULDERING - Referred to also as " ADOBE" OR "PLASTER SHOT" - A charge of explosives fired in contact with the surface of a rock. May be covered with a quantity of mud, wet earth, or similar substance (no borehole used).

BRIDGEWIRE - A very fine filament wire embedded in the ignition element of an electrical blasting cap. An

electric current passing through the wire causes a sudden heat rise, causing the ignition element to be ignited.

BRIDGING - Where the continuity of a column of explosives in a borehole is broken, either by improper placement, as in the case of slurries or poured blasting agents, or where some foreign matter has plugged the hole.

BURDEN - Generally considered the distance from an explosives charge to the nearest free or open face. Technically, there may be an apparent burden and a true burden, the latter being measured always in the direction in which displacement of broken rock will occur following firing of an explosives charge.

BUS WIRE - Solid core 10-, 12- or 14-gauge uninsulated copper wire used in parallel and parallel-series blasting circuits.

CAP SENSITIVITY - The sensitivity of an explosive to shock initiation.

CAST PRIMER - A cast unit of explosives, usually pentolite or composition B, commonly used to initiate detonation in a blasting agent.

CENTERS - The distance measured between two or more adjacent blastholes without reference to hole locations as to row. The term has no association with the blasthole burden.

CLASS & DIVISION
CLASS-Means the hazard class of a material.
DIVISION-Means a subdivision of a hazard class.

CLASS I EXPLOSIVE MATERIALS

DIVISION 1.1 EXPLOSIVES - Solid or liquid explosives which display a major hazard of mass explosion (e.g. Articles, explosives, n.o.s.; articles pyrotechnic, black powder). (49 CFR 173.50)

DIVISION 1.2 EXPLOSIVES - Explosives which have the major hazard of dangerous projections (e.g.. Cartridges for weapons; charges, propelling, for cannon). (49 CFR 173.115)

DIVISION 1.3 EXPLOSIVES - Materials in which the major hazard is the release of radiant heat or violent burning, or both, but there is no projection or blast hazard (e.g., cartridges, signal, cases, combustible, empty, without primer). (49 CR 173.50)

DIVISION 1.4 EXPLOSIVES - Explosives where there is a small hazard with no mass explosion and no projection of fragments of appreciable size or range (e.g., charges, shaped. flexible, linear,charges, bursting, plastic bonded). (49 CFR 173.50)

DIVISION 1.4 COMPATIBILITY GROUP S (1.4S) EXPLOSIVES - Explosives where the hazardous effects are confined within the package or the blast and projection effects do not significantly hinder emergency response efforts (e.g. Cartridges, power device; cartridges, sinal). (49 CFR 173.50)

DIVISION 1.5 EXPLOSIVES (BLASTING AGENT) - A material designed for blasting, which after undergoing certain prescribed tests, is found to be so insensitive that there is very little probability of accidental initiation to explosion or of transition from deflagration to detonation (e.g. Explosive, blasting, type

B). (49 CFR 173.50)

DIVISION 1.6 EXPLOSIVES - A material, which after undergoing certain prescribed tests, is found to be an extremely insensitive detonating substance (EIDS) (e.g. Articles, explosive, extremely insensitive or Articles, EEI). (49 CFR 173.50)

CLASS 2 GASES

NON-LIQUEFIED COMPRESSED GAS-A gas, other than in a solution, which in a packaging under the charged pressure is entirely gaseous at a temperature of 20 degrees C (68 degrees F). (CFR 173.115)

LIQUEFIED COMPRESSED GAS-A gas which in a packaging under the charged pressure is partially a liquid at 20 degrees C (68 degrees F). (49 CFR 173.115)

COMPRESSED GAS IN A SOLUTION - A non-liquefied compressed gas which is dissolved in a solvent. (49 CFR 173.115)

CRYOGENIC LIQUID - A refrigerated liquid gas having a boiling point colder than -90 C (130 F) at 101.3 kPa (14.7 psi) absolute. (49 CFR 173.115)

REFRIGERANT GAS or DISPERSANT GAS - Terms apply to all nonpoisonous refrigerant gases, dispersant gases (fluorocarbons) and mixtures, or any other compressed gas having a vapor pressure not exceeding 1792 kPa (260 psi) at 54 degrees C (130 F) and restricted for use as a refrigerant, dispersant or blowing agent. (49 CFR 173.115)

COLLAR - The mouth or opening of a borehole or shaft. Also, to collar in drilling means the act of starting the drill steel in a bootleg.

CONDENSER DISCHARGE (CD) BLASTING MACHINE - Blasting machine that uses batteries or generator to energize a series of condensers which release stored energy into a blasting circuit.

CONNECTING WIRE - Any wire in a blasting circuit connecting cap leg wires with lead wire. Usually considered expendable.

CONFINED DETONATION VELOCITY - The detonation velocity of an explosive or blasting agent under confinement, such as in a borehole.

COYOTE BLASTING - Blasting of rock by detonating explosives-filled tunnels. The tunnels are usually at the base and parallel to the rock face. Includes the practice of drilling blasting holes (tunnels) horizontally into rock face at the foot of the shot. Used where it is impractical to drill vertically.

COUPLING - Degree to which an explosive fills the borehole. Bulk loaded explosives are completely coupled. Untamed cartridges are uncoupled. (Also intimate contact between explosives and rock.)

CRITICAL DIAMETER - The minimum diameter for propagation of a detonation wave at a stable velocity. Critical diameter is affected by conditions of confinement, temperature, and pressure on the explosive.

CUTOFF - Occurs when a column of explosives fails to detonate due to bridging, or to a shift of the rock

formation caused by an improper delay system. Also applies to disruption of detonating cord initiation systems due to improper layout or knots, or in some cases, to flyrock cutting the cord.

CUSHION BLASTING - A technique of firing a single row of decoupled holes along a neat excavation line to shear the rock between closely drilled holes. Fired after production blasting has been accomplished.

DEAD PRESSING - Desensitization of an explosive, caused by pressurization. Tiny air bubbles, required for sensitivity, are literally squeezed from the mixture.

DECIBEL - The unit of sound pressure commonly used to indicate air blast noise from explosives. The decibel scale is logarithmic.

DECK - In blasting, a smaller charge or portion of a blasthole loaded with explosives that is separated from the main charge by stemming or air cushion.

DECOUPLING - The use of cartridge products significantly smaller in diameter than the borehole. Decoupled charges are normally not used except in cushion blasting, smooth blasting, pre-splitting, and other situations where crushing is undesirable.

DEFLAGRATION - A burning process that proceeds at a rate less than 3000 fps, but produces sufficient gas pressure to rend or disrupt the material around it, including rock.

DELAY BLASTING - The use of delay detonators or connectors that cause separate charges to detonate at different times, rather than simultaneously.

DELAY CONNECTOR - A nonelectric, short interval delay device for use in delaying blasts that are initiated by detonating cord.

DELAY ELEMENT - That portion of a blasting cap which causes a delay between the instant of impressment of energy on the cap and the time of detonation of the base charge of the cap.

DENSITY - The weight of material per unit volume, usually expressed in grams per cubic centimeter; with water = 1.0.

DETONATING CORD - A flexible cord containing a center core of high explosives and used to initiate other explosives.

DETONATION - An explosives reaction that consists of the propagation of a shock wave through the explosive, accompanied by a chemical reaction that furnishes energy to sustain the shock wave propagation in a stable, sustained manner, with gaseous formation and pressure expansion following shortly thereafter. The shock wave must propagate through the explosive at a rate higher than that of the velocity of sound in the undetonated explosives.

DETONATION PRESSURE - The head-on pressure created by the detonation proceeding down the explosive column. Detonation pressure is a function of the density of the explosive and the square of its velocity.

DETONATOR - Any device containing a detonating charge that is used to initiate an explosive. Includes, but is not limited to, blasting caps, electric blasting caps, and nonelectric instantaneous or delay blasting caps.

DOWNLINE - The line of detonating cord in the borehole which transmits energy from the trunkline down the hole to the primer.

DYNAMITE - A high explosives used for blasting, consisting essentially of a mixture of, but not limited to, nitroglycerin, nitrocellulose, ammonium nitrate, and carbonaceous materials.

ECHELON PATTERN - A delay pattern that causes the true burden, at the time of detonation, to be at an oblique angle from the original free face.

EMULSION - An explosives material containing substantial amounts of oxidizers suspended in water droplets surrounded by an immiscible fuel. Similar to a slurry in some respects.

EXPLOSION - A thermochemical process whereby mixtures of gases, solids, or liquids react with the almost instantaneous formation of high gaseous pressures and a heat release. There must always be a source of ignition and a proper temperature limit reached to initiate the reaction. Technically, a boiler can rupture, but cannot explode.

EXPLOSIVE - Any chemical compound, mixture, or device, the primary or common purpose of which is to function by explosion or to initiate explosives; the term includes dynamite and other high explosives, black powder, pellet powder, initiating explosives, detonators, safety fuses, squibs, detonating cord, igniter cord, and igniters.

EXTRANEOUS ELECTRICITY - Electrical energy, other than actual firing current, which may be a hazard with electric blasting caps. Includes stray current, static electricity, lightning, radio frequency energy, and capacitive or inductive coupling, (electromagnetic) waves, and time-varying electric and magnetic fields.

FACE - The end of an excavation toward which work is progressing or that which was last done. It is rock surface exposed to air.

FIRE - In blasting, it is the act of initiating an explosive reaction.

FIRING LINE - A line, sometimes permanent, extending from the firing location to the electrical blasting cap circuit. Also called lead wire.

FLASH OVER - Sympathetic detonation between explosives charges or between charged blastholes.

FLOOR - The bottom horizontal, or nearly so, part of an excavation upon which haulage or walking is done.

FLYROCK - Rock that is propelled through the air from a blast. Excessive flyrock may be caused by poor blast design or unexpected zones of weakness in the rock.

FRACTURE - Literally, the breaking of rock without movement of broken pieces.

FRAGMENTATION - The extent to which rock is broken into small pieces by primary blasting.

FUEL - In explosive calculations, it is the chemical compound used for purposes of combining with oxygen to form gaseous products and cause heat.

GALVANIC ACTION - Currents caused when dissimilar metals contact each other, or through a conductive medium. This action may create sufficient voltage to cause premature firing of an electrical blasting circuit, particularly in the presence of salt water.

GAP SENSITIVITY - A measure of the distance across which an explosive can propagate a detonation. The gap may be air or a defined material. Gap sensitivity is a measure of the likelihood of sympathetic linear propagation.

GRADE - In excavation, it specifies the elevation of a roadbed, rail foundation, etc. When given a value such as percent or degree grade, it is the amount of fall or inclination compared to a unit of horizontal distance for a ditch, road, etc. To grade means to level ground irregularities to a prescribed level.

GRAINS - A system of weight measurement in which 7000 grains equal one pound.

GROUND VIBRATION - A shaking of the ground caused by the seismic waves emanating from a blast. Excessive vibration may cause damage to structures.

HANGFIRES - The detonation of an explosive charge at a time after its designed firing time. A source of serious accidents.

HARDPAN - A tight clay soil, often including sand, gravels, or even boulder content, which, when dry, is so cemented that it must be blasted or ripped in order to excavate.

HIGHWALL - The bench, bluff, or ledge on the edge of a surface excavation, and most often used only in strip mining.

HYGROSCOPIC- A tendency for an explosive product to absorb water/moisture, ie ammonium nitrate

IGNITACORD - A cord-like thermite fuse that burns progressively along its length with an external flame at the zone of burning and is used for lighting a series of safety fuses in sequence. Burns with a spitting flame similar to a Fourth of July sparkler.

INITIATION - The act of detonating a high explosives by way of a mechanical device or other means.

JOINTS - Planes within rock masses along which there is reduced resistance to separation and along which there has been no relative movement of the material on each side of the break. Joints, unlike strata, are unrelated to the order of geological deposition.

JUMBO/GANG DRILL - A machine with one or more mounted drilling units which may or may not be operated independently.

LEAD WIRE - The wires connecting the electrodes of an electric blasting machine with the final leg wires of a blasting circuit.

LOADING DENSITY - An expression of explosives density in terms of pounds of explosives per foot of a specific diameter.

MAGAZINE - Any building or portable structure used to store explosives and blasting caps.

MILLISECOND DELAY CAPS - Delay electric caps which have a built-in delay element. Timing usually consists of 25/1000 of a second intervals, consecutively. This timing may vary from manufacturer to manufacturer.

MISFIRE - A charge, or part of a charge, which for any reason has failed to fire as planned. All misfires are to be considered extremely dangerous until the cause of the misfire has been determined.

MUCK PILE - The pile of blasted and broken rock or dirt after the shot, that is to be loaded or removed.

NONELECTRIC DELAY BLASTING CAP - A detonator with a delay element, capable of being initiated nonelectrically. See shock tube system; gas detonation system; Detaline system.

OPEN PIT - A surface operation for the mining of metallic ores, coal, rock, etc.

OVERBURDEN - The material lying on top of the rock to be blasted; usually refers to dirt and gravel, but can mean another type of rock; for example, limestone over coal.

OXIDIZER - An ingredient in an explosives or blasting agent which supplies oxygen to combine with the fuel to form gaseous or solid products of detonation. Ammonium nitrate is the most common oxidizer used in commercial explosives.

PARTICLE VELOCITY - A measure of ground vibration. Describes the velocity at which a particle of ground vibrates when excited by a seismic wave.

PENTAERYTHRITOLTETRANITRATE (PETN) - An explosive used as the core load of detonating cord and the base charge of blasting caps.

PERMISSIBLE - An explosive approved by the U.S. Bureau of Mines for controlled heat and duration of detonation flame and allowed for use in underground work. Permissibles are allowed to produce more toxic fumes than non-permissibles. Reduces the possibility of ignition of coal dust or methane gas.

POWDER - A common synonym for explosive material.

POWDER FACTOR - The tons or cubic yards of rock affected per pound of explosives used.

PREMATURE DETONATION - Charge detonates before it is intended to.

PRE-BLAST SURVEY - The inspection and documentation of the existing condition of rock/ground formation or other medium, or structure, prior to blasting.

PRIMER - A unit, package, or cartridge of explosives used to initiate other explosives or blasting agents, and which contains: (1) detonator; (2) detonating cord to which is attached a detonator designed to initiate the detonating cord.

PROPAGATION - The detonation of explosives by an impulse from a nearby explosives charge in either columnar or linear spaced configuration.

QUARRY - An open or surface mine used for the extraction of rock such as limestone, slate, building stone, etc.

ROUND - A set of holes drilled and charged with explosives in any phase of explosives work, which are fired instantaneously or with delay detonators.

SAFETY FUSE - A cord containing a core of black powder and having a controlled burn rate, used to initiate blasting caps.

SCALED DISTANCE - A ratio to predict ground vibrations. As commonly used in blasting, scaled distance equals the distance from the blast to the point of concern, in feet, divided by the square root of the charge weight of explosive per delay, in pounds. Normally, when using the equation, the delay period must be at least nine ms.

SEAM - A stratum or bed of mineral. Also a stratification plane in a sedimentary rock deposit. The seam may also be of sand or mud and may run vertically or horizontally, or at any angle in between.

SECONDARY BLAST - Using explosives to break up larger rock masses resulting from the primary blasts. These are the rocks that are too large for easy handling.

SEISMOGRAPH - An instrument that measures and supplies a permanent record of earth-borne vibration induced by earthquakes and/or blasting. (In blasting, except for seismic exploration, it is called a blast monitor.)

SENSITIZER - The ingredient used in explosives compounds to promote greater ease in initiation or propagation of the reactions.

SEQUENTIAL BLASTING MACHINE - A capacitor-discharge blasting machine with more than one circuit. Each circuit can have either a preset time or the time can be set by the blaster.

SHOT FIRER - Also referred to as the blaster-in-charge. The person who actually fires the blast. A powderman, on the other hand, may charge or load the blastholes with explosives, but may not actually fire the shot.

SHUNT - A piece of metal connecting two ends of leg wires to prevent stray currents from causing the possibility of accidental detonation of an electric blasting cap. The act of deliberately shorting any portion of an electrical blasting circuit.

SLOPE - Used to define the ratio of the vertical rise or height to horizontal distance in describing the angle that a bench or bench face makes with the horizontal plane. For example, a one and one-half to one slope means there would be a one and one-half feet rise to each one foot of horizontal distance.

SLURRY - An aqueous solution of ammonium and sodium nitrate with a fuel, sensitized usually by microballoon entrapped air and some chemical sensitizers, thickened, and cross-linked to provide a gelatinous consistency. Sometimes called a water gel. DOT may classify as a Class A explosives, a Class B explosives, or a blasting agent. An explosives or blasting agent containing a substantial portion of water (MSHA). See EMULSION; WATER GEL.

SNAKEHOLE - A hole drilled or bored under a rock or tree stump for the placement of explosives.

SPACING - In blasting, the distance between boreholes or charges in a row.

SPECIFIC GRAVITY - The density of a material compared to water.

SPRINGING - Sometimes called chambering. This is the process of enlarging a portion of a blasthole (usually the bottom) by firing a series of small explosives charges. May also refer to the enlargement of a blasthole by jet-piercing or spalling.

STEADY STATE VELOCITY - The characteristic velocity at which a specific explosive, under specific conditions, in a given charge diameter, will detonate.

STRENGTH - For dynamites, refers to the energy content of an explosives in relation to an equal amount of straight nitroglycerin dynamite or ANFO, depending on the scale being used. For other explosives, refers usually to a weight comparison with ANFO.

SUBDRILLING - The technique of drilling holes somewhat deeper than desired floor grade in order to achieve on-grade shear and eliminate toe.

SWELL FACTOR - The ratio of the volume of a material in its solid state to that when broken.

TAMPING - The process of compressing the stemming or explosives in a borehole.

TOE - The unbroken rock, higher than floor or bench grade, left in front of a detonated hole or row. It results in uneven floor, and is usually controlled through subdrilling.

TRANSIENT VELOCITY - A velocity, different from the steady state velocity, which a primer imparts to a column of powder. The powder column quickly attains steady state velocity

VELOCITY - The measure of the rate at which the detonation wave travels through explosives.

WATER GEL - An aqueous solution of ammonium and sodium nitrate with a fuel sensitized by explosive additives and/or microballoon entrapped air, thickened, and cross-linked to provide a gelatinous consistency. Also called a slurry. May be an explosives or a blasting agent.

WEIGHT STRENGTH - A rating that compares the strength of a given explosives with an equivalent weight of an explosives standard, expressed as a percentage. The explosive standard for dynamites is straight nitroglycerin dynamite. The standard for all other explosives is ANFO, which is given a base value of 100 (for example, 100 percent).

REFERENCES

The following materials should be accessible to all blasters and explosives instructors:

1. ***Federal Guide for Using, Storing, and Transporting Explosives and Blasting Materials.***
   (a) Use
   (b) Storage
   (c) Transportation
   (d) Disposal
   (e) Objectives
   (d) Policy
   (f) Responsibilities

2. ***Explosives and Rock Blasting*** (current edition)**.**
   Atlas Powder Company. 15301 Dallas Parkway, Colonade Suite 1200, Dallas, Texas 75248-4692.

3. **Local State Laws and Regulations.**

4. **Federal Laws and Regulations.**
   Federal regulations controlling transportation, storage, and use are listed below. The regulations most commonly applicable to federal agency activities are included.

   TITLE 27 CFR, PART 55
   Commerce in explosives with emphasis on subpart K, storage, Bureau of Alcohol, Tobacco, and Firearms, (BATF), U.S. Government Printing Office, Washington, D.C. 20402.

   TITLE 29 CFR, SUBPARTS H 1910.109 AND 19926.900
   Occupational Health and Safety Organization (OSHA) U.S. Government Printing Office, Washington, D.C. 20402.

   TITLE 30 CFR, PART 55
   Mine Safety and Health Administration (MSHA), U.S. Department of Labor, Washington, D.C., 20402.

   TITLE 49, CFR, PARTS 171-177 AND 390-397 Department of Transportation, (DOT), U.S. Government Printing Office, Wilmington, Delaware, 19899.

5. ***HANDBOOK of ELECTRIC BLASTING, 1976***.
   Revised by Atlas Chemical Industries, Explosives Division, Wilmington, Delaware, 19899.

6. ***PRIMACORD HANDBOOK, 1984.***
   Ensign-Bickford Co., Simsbury, CT, 06070.

7. ***SAFETY FUSE-***
   WHAT IT IS, HOW TO USE IT, 1972.
   Ensign-Bickford Co., Simsbury, CT, 06070.

8. ***USES OF EXPLOSIVES IN SEISMIC***

EXPLORATION, 1974.
Neil MacDonald, Atlas Powder Company, Southland Center, Dallas, Texas, 75251.

9. ***AVALANCHE HANDBOOK, AGRICULTURE HANDBOOK 489. JULY 1976.*** (Slightly revised, November, 1978)**.** By Alpine Snow and Avalanche Research Project, Rocky Mountain Forest and Range Experiment Station, USDA Forest Service, Ft. Collins, Colorado. (Out of print, but commonly used).

10. ***INSTITUTE OF MAKERS OF EXPLOSIVES PUBLICATIONS, NOS. 2, 4, 17, 20, AND 22***
4230 Lexington Ave., New York, New York, 10017.

11. ***CAN STATIC ELECTRICITY FROM CLOTHING DETONATE ELECTRIC BLASTING CAPS, 1971.***
USDA Forest Service. Equip Tips, Missoula Technology and Development Center, Bldg.1, Fort Missoula, Missoula, Montana, 59801.

12. ***BLASTING NEAR HIGH VOLTAGE POWERLINES, 1974.***
Atlas Powder Company, Southland Center, Dallas, Texas, 75203.

13. ***NATIONAL FIRE PROTECTION ASSOCIATION STANDARD NO.78.***
Battery March Park, Quincy, MA, 02269.

14. ***BLASTING TECHNIQUES: 1. ESTIMATING THE BLASTING PROJECT, 1985.***
Albert E. Teller, P.O. BOX 664, Issaquah, Washington, 98027.

15. ***BLASTING TECHNIQUES: 2. DITCHES-STUMPS- BOULDERS, 1983.***
Albert E. Teller, P.O. BOX 664, Issaquah, Washington, 98027.

16. ***UNIFIED ROCK CLASSIFICATION SYSTEM***.
Douglas Williamson, Engineering Geologist, USDA Forest Service, Region 6, P.O. BOX 3623, Portland, OR, 97208.

17. ***EXPLOSIVES ROCK BLASTING. 1987.***
Atlas Powder Company. 15301 Dallas Parkway, Suite 1200, Dallas, Texas, 75248.

18. ***DRIVERS POCKET GUIDE TO HAZARDOUS MATERIALS. 1989.***
J.J. Keller & Associates, Inc. Sixth Edition, P.O. Box 368, Neenah, Wisconsin, 54957-0368.

19. ***BMC. THR BLASTING PRIMER.***
James T. Ludwiczak. Blasting and Mining Consultants, Inc. Owensboro, KY, 42301.

20. ***BLASTING FOR PROFIT. EXPLOSIVES CONSULTANTS, INC.***
3603 Marlborough Dr. Plano, Texas, 75075.

Appendix A
BLASTING SPECIALTIES AND REQUIREMENTS FOR CERTIFICATION*

Specialty Title	Minimum Requirements
Technical Blasting	National Park Service blaster; successful completion of "Advanced Blasting Techniques," and show previous experience in large-blast design and delay-blasting acceptable to regional blasting officer.
Trenching and Rock Excavation	National Park Service blaster; successful completion of "Advanced Blasting Techniques," plus eight hours minimum NPS training in this specialty, and show previous experience in trenching and bedrock excavation acceptable to regional blasting officer.
Logjams	National Park Service Blaster; eight hours minimum NPS training in this specialty, recommended by instructor and approved by regional blasting officer.
Icejams	Same as for logjams.
Underwater (non-diving)	Same as for logjams.
Timber Felling	Includes snags; same as for logjams, except must have minimum three years prior experience in falling similar timber with saw.
Avalanche Control	National Park Service blaster; certified by the National Avalanche Training School and approved by regional blasting officer, and U S Army personnel regarding military certification
Fireline Blasting	National Park Service blaster; recommended from USFS Fireline Explosives School and approved by regional blasting officer.
Demolition	(Limited to small structures such as single-story buildings, wood or masonry bridges, small diversion dams, foundations and footings, masonry tanks, etc.). National Park Service blaster; successful completion of "Advanced Blasting Techniques," plus 16 hours minimum NPS training in this specialty; show prior experience, similar to type of demolition to be done, acceptable to regional blasting officer.
Disposal (of unstable or potentially unstable products)	National Park Service blaster; eight hours minimum NPS classroom and eight hours minimum NPS field training in this specialty; minimum three prior experiences under supervision of someone qualified in disposal; recommended by instructor and chief park blaster, approved by regional blasting officer.

* Other specialties such as blasting of structural steel and cable, channel blasting, blast casting, underwater blasting at diving depths, tunnel blasting, etc. may be developed as a NPS need for such work is demonstrated.

Appendix B
STANDARD EXPLOSIVES USE SPECIFICATION FOR CONTRACTS

Deletions or alterations to this specification cannot be made without the prior written approval of the National Park Service (NPS) Blasting Officer. This approval is mandatory under the NPS Explosives Use Policy.

SECTION 02114 - EXPLOSIVES USE STANDARD

Part 1: General

1-1 Description: The work of this section consists of all activities that relate to explosives, including receiving, handling, transporting, storing, distributing, priming, loading, firing, and disposal.

1-2 Quality Assurance:

A. Regulatory Agencies: All operations with explosives shall be conducted in accordance with the National Park Service Explosives Use Policy and the rules and regulations established by the Occupational Safety and Health Administration (OSHA) contained in 29 CFR 1910 and 1926, Construction and Safety. In addition, the contractor shall comply with Department of Transportation rules and regulations contained in 14 CFR 103, Air Transportation; 46 CFR 146-149, Water Carriers; 49 CFR 390-397, Motor Carriers; and Internal Revenue Service regulations contained in 27 CFR 55, Commerce in Explosives.

B. Legal Requirements: Comply with all applicable federal, state, and local laws pertaining to the purchase, transportation, storage, handling, and use of explosives. Obtain all required permits and licenses.

1-3 Submittals:

A. Blasting Plan: Submit a blasting plan covering qualifications of blaster-in-charge and blasting crew; transportation; storage and magazines; blast site operations; area security plan, including signal system; handling of misfires; removal and disposal of unused or excess explosives; and blast records.

1. Blaster-in-Charge Qualifications:
   a. Must possess a valid state blaster's license or other license issued by an equivalent licensing body acceptable to the contracting officer.
   b. Must submit written resume showing not less than three years of active involvement as blaster-in-charge on projects similar in scope to this contract.
   c. Must submit a list of five references who can testify to the known qualifications and reliability of the proposed blaster-in-charge.

2. Blasting Crew Qualifications: All crew members must have completed explosives and blasting safety training of at least 24 hours and/or have not less than one year of experience acceptable to the contracting officer.

3. Transportation Plan: Include description and license number of vehicle to be used, route(s) to be traveled, and proposed hours of travel, and qualifications of driver.

4. Storage and Magazines: Show location and construction of magazines and day-boxes, inventory system to be used, and signing installed.

5. Blast Site Operations: Include type of explosives to be used, initiation system to be utilized, drilling system, loading plan, firing plan, pre-blast and post-blast inspection, handling of misfires, and removal and disposal of excess explosives.

6. Area Security Plan: Include proposed signing, guard system, signal system, methods of communication, and pre-blast notification of affected agencies or entities.

B. Permits and Licenses: Submit copies, or other proof acceptable to the contracting officer, of all applicable permits and licenses, including blasting liability insurance.

C. Contracting Officer's Approval: The contracting officer will indicate his approval or disapproval of each submittal, and reasons for disapproval. When submittals have been approved, the number of copies the contractor wants for his own use will be returned. No work shall be done before approval is received.

1-4 Project Conditions:

A. Protection: The safety of personnel shall be the controlling consideration in decisions involving explosives activities. The contractor shall exercise the utmost care not to endanger life and property. Make proper use of blasting mats and other protective devices, adopting whatever additional precautions are deemed necessary to prevent damage to trees, shrubs, other landscape features, buildings, utilities, monuments, and other structures. Make every effort to prevent damage tot he natural and the constructed surroundings. Should damage occur, make restoration as required by the contracting officer at no additional cost to the government.

B. Blaster-in-charge: One competent, experienced person-shall be specifically designated in charge of explosives and all related activities. The designated person must present certification to the contracting officer as required in 1-3, A.1. He shall carefully supervise all work related to the use, storage, transportation, and handling of explosives. Permit only a minimum number of competent, experienced personnel, consistent with efficient operation, to handle explosives. Exclude anyone demonstrating carelessness, incompetence, or inexperience from further handling of explosives.

C. Blasting Crew: Those persons designated by the blaster-in-charge or contractor to assist with explosives activities, including transportation and area security.

D. Fire Watch: During periods of fire danger, the contracting Officer may require a person to be detailed as a fire watch for one hour after blasting, or for two hours during periods of extreme fire danger. Under extreme fire danger, the use of all-electric detonation systems may be required by the contracting officer.

1-5 Closeout Submittals: On completion of the work, furnish a written statement, countersigned by the blaster-in-charge, certifying that:

A. All blasting is complete and all explosives materials, including detonators, detonating cord, explosives, and any unmixed components of a two-component explosive system, have been removed from the park.

B. All blastholes loaded with explosives and any other set explosive charges have either been detonated or unloaded and explosives have been properly disposed of.

Part 2: Materials

Provide as required. Only explosives, explosive components, and detonators commercially manufactured within the previous two years shall be used.
Note: Nitroglycerine products are not permissible
Note: Cap/safety fuse products are not permissible

Part 3: Execution

3-1 General Requirements: The contractor shall abide by all referenced rules and regulations, and shall give special attention to the following specific rules:

A. Locate magazines only at sites approved by the contracting officer.

B. Magazines shall be of the type required by Bureau of Alcohol, Tobacco and Firearms (BATF) for the material being stored.

C. Magazines and day-boxes shall be kept locked at all times except when withdrawing or returning materials from or to that magazine or box.

D. Clear blast area of unnecessary personnel and equipment before delivery of any explosives to the site.

E. Keep no more than a one-day supply of explosives and detonators at or near the work site. Keep explosives and detonators in separate approved day-boxes.

F. Use only wooden or plastic tamping poles for charging explosives into drill holes. Drilling in bootlegs, or within 50 feet of any loaded hole, is prohibited.

G. Do not use electricity from light or power circuits, or from batteries, for firing shots.

H. Provide a positive signal system to give adequate warning in every direction as required in the area security plan. Guard all access points, including water access, to the blast area to halt personnel and vehicles a safe distance from the blast. Maintain intercommunication between guards and person firing the blast, assuring the blast area is clear prior to firing. Guarding shall commence when loading commences, and shall continue until post-blast inspection has been made and the "All Clear" signal given.

I. Provide warning signs at all access points, including warnings to turn off radio transmitters, in accordance with OSHA requirements.

J. Daily explosives inventory records shall be kept, and a record or log shall be made of each blast, such records to be available for inspection by the contracting officer upon request. Copies of all blast records shall be submitted to the contracting officer daily.

Part 4: Measurement and Payment

4-1 Explosives: Payment will be included under the bid item to which this work relates.

INDEX

Absolute Liability, 1
Accidents, 4, 74
Air Blast, 11, 160, 162
Air Gap, 22, 198
Ammonia Nitrate, 30, 139
    Utility & Light Construction, 142
Animal Carcass Removal, 195
Avalanche Blasting, 167
Avalauncher, 179

Blast Area Security, 3
Bench Blasting, 125
Blast Design, 119
Blaster, 9
Blaster-In-Charge, 6,14
Blasting Control, 127
Blasting Inspector, 7
Blasting Mats, 155
Blasting Officer, 5
    Chief Park Blaster, 6
    DSC, 5
    NPS, 5
    Regional, 5
Blasting Records, 3, 15
Blasting Review Board, 14
Boulder Breaking, 148
Borehole Coupling, 116
Burden Spacing, 115
Burnol Backfirng Devices, 194

Cap Sensitivity, 22
Certification, 10
Charge Distribution, 126
Chief Park Blaster, 6
Combustibles, 21
Components, 89
Contracting, 2, 14
Control Unit Hookup, 189
Converging Shock Wave Principle, 149
Conveyor Belting Blasting Mats, 143

Delay Patterns, 114
Delay Primers, 110
Density, 25

Detaline Detonating Cord, 104
Detonation & Borehole Pressure, 26
Detonating Cord, 36, 95, 101
Disposal, 4
Drilling, 96, 123, 125

Electric Blasting Caps, 35, 90, 185
  Ditch Line Shooting, 138
  Light Construction, 134
  Pits, Lagoons, Lift Stations, Swimming
  Pools, Basements, 138
Electric Blasting Circuits, 91
Emergency Signals, 74
Emulsions, 184
Expanding Grout, 199
Expansion Alternatives, 199
Exploding Bridgewire Detonators, 35, 95, 186
Explosives
  Classes, 40
  Destruction, 157
  Disposal, 158
  Economics, 116
  Handler, 7
  Instructor, 7,8
  Properties & Bases, 24
  Selection, 34
  Theory, 21
  Use, 3

Federal Regulations, 1
Fireline Explosives, 181
Firing, 98
Firing Module, 183, 189
Fracture Mechanism, 200
Fume, 26, 32

Gas Release, 32
General Properties, 33
General Requirements, 1

Hole Patterns, 113
High Explosives, 29
Howitzer Weapons, 174, 175

IME Containers, 66
Initiating Devices, 35

Inspection, 9, 41, 87
Inspector, 8
Instructor, 7, 8
Inventory, 3, 53

Lead Wire, 183
Lifters & Snakeholes, 126
Loading, 97
Low Explosives, 27

Magazines, 39
  Construction, 42
  Operator, 7
Military Weapons, 176
Misfire Procedures, 191

Non-NPS Users, 4
Non-Electric Initiation Systems, 105
Non-Detonating Rock Breaking, 196
Nonel Cords, 37, 105

Parking, 61
Pentolite, 32
Personnel, 4
Permissibles, 26
PETN, 32, 182
Pit Shooting, 146
Pole Hole Shooting, 146, 154
Post Fire Procedures, 189
Powder Factor, 115
Primers, 37, 93
Priming Charge, 107
Properties of Explosives, 24

RDX, 32
Records, 3, 15
Routes, 61

Safety, 8, 165, 172, 185
Safety Fuse, 101
Secondary Blasting, 125
Security, 3, 85
Selection, 32
Sensitivity, 32
Sequential Blasting, 155

Shelf Life, 26
Shock Energy, 129
Shock Wave, 23
Signal Systems, 86
Signing, 85
Snow Work, 171
Specialties, 3
Specification for Contracts, 14
Splicing, 92
Storage, 2, 39, 43, 55
Stump Shooting, 149

Theory of Explosives, 21
Tools, 17
Trainee, 7
Training, 2, 8, 9
Transportation, 2
  By Aircraft, 77
  By Vessel, 76
  Class C Detonators, 65
  Motor Vehicle, 57
  With Pack Stock, 75
  With Trail Vehicles and ATV's, 76
Tree Felling, 150
Trenching, 126, 144, 146
Two Components, 29

Use & Handling, 3

Vibration, 162
Vehicle Requirements, 63
Velocity, 30, 32
  Detonation, 22

Water Gel, 183
Water Resistance, 26, 32
Wiring, 97