CRM BULLETIN

Volume 10: No. 2 Cultural Resources Management • A National Park Service Technical Bulletin April 1987

Landmarks of Democracy

View of the main facade and plaza of the Supreme Court Building, Supreme Court of the United States (Photograph by Theodor Horydczak)

Harry A. Butowsky

During the summer of 1787, 55 delegates from the young United States of America met in the State House of Philadelphia, the same building in which some of them had approved the Declaration of Independence 11 years before. Their inspired labors through four months of debate behind closed doors produced the U.S. Constitution, a document calculated "...to form a more perfect Union, establish Justice, insure domestic Tranquility, provide for the common defence, promote the general Welfare, and secure the Blessings of Liberty to ourselves and our Posterity...." As the delegates left Philadelphia and the ratification process began, one delegate asked that future generations not consider it error-proof. Trench Cox, an early supporter of the Constitution wrote, "There is no spirit of arrogance in the new federal Constitution. When experience has taught us its mistakes, the people whom it preserves, absolutes all powerful, can reform and amend them."

In the 200 years since 1787, the U.S. Constitution has proved the most successful blueprint for popular sovereignty in human history. During these years, the United States has evolved from a small agricultural Nation of some five million people situated on the fringe of the Western World to an industrial giant of more than 240 million people that is the center of the Western World. In these years, the Constitution has changed and evolved to meet new demands and conditions never foreseen by early supporters like Trench Cox. The National Historic Landmarks associated with these changes represent the preserved heritage of all Americans and form the basis for the recently completed U.S. Constitution National Historic Landmark Theme Study.

(See related story, page 10)

"The U.S. Constitution National Historic Landmark Theme Study" is available for purchase from GPO for $5.50. Stock Number: 024-005-01017-3.

Conservation of Objects in the NPS

John Demer

"History's hospital" is how one journalist described Harpers Ferry Center. He was referring to the Conservation Division where conservators stabilize and restore museum objects. The Conservation Division performs three functions critical to park museum exhibits: object treatment, object mounting, and safe transport of objects to and from parks. Object treatment is the function most familiar to staff in parks and regions; object mounting and transport are silent partners that warrant more attention.

The division treats from 1,200 to 1,500 objects a year. The objects range in size, complexity, and value from an earthenware plate used for decoration by Bess and Harry Truman to a painting of an historic figure on exhibit at Independence National Historical Park. Regardless of value or historical association, every object receives equal respect and care. Treatment

(continued on page 2)

Gregory S. Byrne

It is estimated that there are about 25 million objects and specimens in the museum collections of the NPS. The Conservation Division is a unique facility in offering specialized conservation assistance, with qualified conservators treating archeological and ethnographic materials, fine arts and decorative art objects, and historic materials of wide-ranging composition.

(continued on page 2)

Objects in the NPS *(continued from page 1)*

John Demer

priority is determined by the exhibits program and from requests by regional directors and park superintendents. Regional directors review the program with the Manager of the Harpers Ferry Center, and priorities are established and revised as needed.

Recent examples of objects treated include a leather portmanteau used by George Washington, pottery from Chaco Canyon, one of five Lincoln drafts of the *Gettysburg Address*, painted doors of the iconostasis from the Russian Bishop's House in Sitka, 2,000 year-old effigies from Effigy Mounds, a desk used by Eugene O'Neill, brass musical instruments from Gettysburg, and flags flown at Fort Sumter on April 12, 1862.

Functions

After objects have been selected for exhibit or for a furnished historic structure, registrar Gary Moreland arranges for their transport to Harpers Ferry for examination, treatment, and mounting. In some years, the registrar processes over 8,000 objects. He is assisted by a full-time assistant registrar, Nancy Hatcher; a museum photographer, Mike Wiltshire; and museum records clerk Joyce Myers, who manages the conservation treatment records.

Transport includes detailed packing lists, transfers of property, custom packing, arrangements for shipment, unloading at Harpers Ferry, cross-checking packing lists and transfers, accessioning, storing objects, and photography. These tasks are done before a conservator even sees an object for treatment.

Treatment begins with a visual examination sometimes supplemented by microscopic or chemical analysis. Next, a conservator prepares a treatment proposal for discussion with the park staff member responsible for collections. On approval, which may be done by phone, the conservator follows the treatment proposal in stabilizing or restoring the object.

Before the object is returned to the park, a custom mount may be designed and constructed by mountmaker Cliff Funkhouser or Paul Webb. The mount supports an object from the strain of exhibition. It also protects it from damage due to vibration or mishandling. Mountmaking takes extraordinary skill and thorough knowledge of a variety of materials.

New Ideas

The staff has come up with exciting innovations. For years, three parks shared a sampler sewn by Mary Fitzhugh in the late 1700s. The division made a full scale color photograph of the sampler, which, when framed, is almost indistinguishable from the original. We can thus better preserve the original by storing it while we exhibit the framed photograph. We interpret the reproduction as a photograph, and we tell visitors why.

Treatments are reversible and inert. The staff has used a photograph of furniture inlay to repair a damaged piece of furniture and a photo of a portion of muskrat skin to use in a damaged banjo head. To the naked eye, the photographs are hard to tell from the original materials with which they have been integrated, but a specialist can later remove them when better treatments are developed.

Flags used to be machine stitched between layers of silk. In time, the stress of machine stitching tore original fibers. Today, thanks to research by textiles conservator Fonda Thomsen, the Service hand stitches Stabiltex, a synthetic fabric with qualities like silk, to support a flag. When warranted, the staff returns a flag in a special, nearly-airtight case, ensuring a flag's long-term preservation.

Park and regional staff praise the division's work except in one area—the length of time needed for treatment. To speed up turnaround, we will work on the highest priority objects first, and we will also develop more term and indefinite quantity contracts. By these and other means, the division will meet a critical need in park exhibits.

The author is Chief of the Conservation Division at the Harpers Ferry Center.

Gregory S. Byrne

Laboratories

Each laboratory within the division represents a subject matter specialty or a materials specialty. Bart Rogers, an objects conservator with a specialty interest in metals, is also an expert on weapons and mechanisms such as clocks. The ethnographic laboratory, headed by Toby Raphael, treats various objects which are composed of organic materials, especially leather or other skin products. Objects conservator Greg Bryne works with ceramics and glass and often treats decorative arts objects such as gilded pieces or ivory. Excavated materials conservator Dan Riss devotes the majority of his object treatment time to archeological specimens while also working on the treatment of outdoor bronze sculpture. Fonda Thomsen is the division's textiles conservator. Fonda has developed a specialty expertise in treating historic flags. Furniture and wooden objects are treated by Alan Levitan and Ron Sheetz. Charles Shepherd divides his time between performing conservation treatments on a variety of metallic artifacts in the metals laboratory, and preparing natural history specimens for exhibit. Tom Carter, the division's paintings conservator, treats the Service's fine and decorative art collections, including works which are both historically and aesthetically valuable.

Conservation as a profession continues its development by adding specialty areas based upon collection needs. Although the Conservation Division closely mirrors the nature of our national collections, it does not have conservator positions which address the treatment of photographic collections, or an exhibit's conservator to work on the specific problems of objects on exhibition.

Park Assistance

The division makes every effort to provide conservation support to the NPS through professional involvement in the exhibit process at the Harpers Ferry Center, and through

(continued on page 3)

Gregory S. Byrne
(continued from previous page)

direct support to the parks as a service center function. The division works closely with regional curators in coordinating direct conservation assistance to the parks, especially in treatment of objects.

Although treatment assistance is most often requested, treatment of park collections is cost effective when it fits into an overall plan for the park's collection. Collection management planning usually calls for a collection condition survey. The Conservation Division can provide collection condition surveys; make assessment of treatment needs; and give recommendations for object storage, all as aspects of collection management planning.

The conservation staff also facilitates contracting by reviewing contract specifications, reviewing treatment proposals, and occasionally advising the parks on sources of treatment services. On-site conservation training is another way of providing direct support to the parks. It is important for park personnel to be updated in housekeeping and preservation maintenance procedures for their collection. The division is especially interested in assisting parks with short "how-to" courses for newly installed exhibits. Finally, the division serves to channel professional conservation information into Service museum programs in the rapidly changing conservation field through a centralized clearinghouse.

Coordinator Program

Assistance in the museum exhibit planning, design, and production process has been organized into a conservation coordinator program. The coordinator (a conservator assigned to an exhibit project for its duration) serves as the evaluator of the exhibit plan from a preservation viewpoint. This usually includes a review of the fundamentals such as building orientation, fabrication, HVAC system, and lighting design. As the plan develops, the conservator helps with case location and mounting and sometimes treatment of objects. When necessary, the treatment of objects follows as the exhibit is produced and is the result of both a report of examination and an approved treatment proposal for each object. The conservator's report often authenticates an object's composition and this information can have a major impact on its exhibit potential. Although a report of examination is standard practice in the treatment process, objects can and do come into the laboratory for no other purpose than examination. Once the treatment process is complete, the conservator often helps with the installation of sensitive objects in a new exhibit. Other division activities include the development of conservation information for use at the Center, in the parks, for publication, or for use in conservation training courses.

The Conservation Division has come a long way over the years. The division concentrates on both the preventive and interventive aspects of conservation. While the conservators are available to assist parks with object treatment (especially emergencies), the process for obtaining treatment services has become more systematic. Unlike the old days when artifacts came directly from a park to await treatment, the need for treatment services now filters through the office of the regional curator, and treatment service to the parks has now become a part of regional priority-setting. The conservation coordinator program further ensures the health and safety of objects on exhibit by having a conservator follow the project from inception to completion. We anticipate applying the mechanics of this successful program to the rehabilitation of old museum exhibits.

Plans are underway to relocate the Conservation Division in a new building. An improved conservation facility will enable the division to better pursue its collections care goal of implementing the broad spectrum of conservation activities to insure the preservation of our national heritage.

The author is Chief Conservator, Conservation Division.

Museum Collections Conservation: An NPS History

Ralph Lewis

When Congress established the National Park Service in 1916, one clear purpose was to conserve natural and historic objects in the parks. The need for active object conservation already existed. In his first annual report to the Secretary of the Interior, Director Mather asked for $1,000 to preserve the totem poles in Sitka National Monument. He also reported construction of over a mile of fence to deter visitors from adding to the historic inscriptions at El Morro National Monument.

At that time virtually no one had given scientific study to the problems of object conservation. No one had studied the anatomy of totem poles in terms of diseases that afflict them, for example. The NPS curators, like curators everywhere, had to depend on empirical knowledge borrowed from various trades and on sheer manual skills. Thus, the money for Sitka went to the local custodian who chiseled out decayed wood, inserted pieces of new cedar, and gave the poles two good coats of paint. This treatment did not solve the problem, and after seven more years of similar treatment, the Service still had not succeeded in preserving the poles permanently.

(continued on page 12)

Museum Technician Training

Ed McManus

Training has not always been recognized as necessary to collection maintenance in the National Park Service. At times the collection maintenance responsibility at a site is assigned as a collateral duty, and cultural resources often compete with natural resources for the same funding. For these and other reasons, the level of museum expertise which is found within the Service varies from park to park. Even those parks with important collections and professionally trained curators are sometimes deficient when considering the daily hands-on activities of collection maintenance.

The legislative foundation for the cultural resource maintenance function is in the Organic Act of 1916, and NPS-28 provides the guidelines necessary for accomplishing that function. How well this is done at each site depends on the sensitivity of park management to the resource. In certain instances, NPS collections seem static, consisting of historic structures and period furnishings. Usually there is not an active acquisition program; curatorial research beyond the registration process is not necessary to park operations, and the house-keeping has traditionally been a maintenance responsibility. In such instances, other important aspects of collection maintenance such as environmental monitoring and proper museum storage are overlooked. Because the NPS collection is located in parks throughout the U.S. and its territories, its overall size and importance are not recognized when compared with other large museums and foundations which are centrally located; therefore, funding and professional staffing needs can also be overlooked.

Curriculum

Former Regional Curator for the North Atlantic Region (NAR), Edward Kallop, was keenly aware of differing attitudes that existed within the NPS and the greater museum profession. While the Service did indeed recognize its responsibility to preserve and protect cultural resources, it did not necessarily consider itself to be in the museum business. One of Ed's many accomplishments before his retirement was the development of NAR's museum technician training curriculum.

Until 1980, the existing NPS training program, Curatorial Methods, was devoted largely to NPS policy, regulations, forms, and procedures with some hands-on conservation treatment taught by conservators at the Harpers Ferry Center; and additional instructions for collections care could be found in Ralph Lewis' **Manual for Museums.** Ed Kallop envisioned a three-phase technical training program which would correspond to GS-5, 7, and 9, and which would also complement, rather than duplicate, the existing training program. The program would lead to certification in a specific object or collection category. The first Phase I basic training course was conducted in 1981 at the Charlestown Navy Yard in Boston. During the ensuing years, course format and objectives changed in response to various needs and opportunities. To date, there have been four Phase I training sessions, two Phase II sessions, and one Phase III session. Phases II and III have not developed much beyond the initial concept. Phase I, however, has been very successful. It is a basic course which has application outside as well as within the Service.

During frequent visits to parks within the NAR, Ed Kallop would find situations which suggested that things were not quite right, such as light sensitive materials still on exhibit after many years; or contract conservation procedures that permitted conservators and restorers to make major curatorial decisions on their own. Most frustrating were those few instances where objects had been sent away for major conservation treatment and reinstalled under the same environmental conditions which caused the initial damage. In order to properly maintain the collections, it

(continued on next page)

would be necessary to develop on-site expertise at each park throughout the Region. We now refer to this expertise as preventive conservation, and it is usually the museum technician who administers it.

Identifying the course material for Phase I was relatively easy. The fate of any collection is dependent upon its material composition and the environment in which it is exhibited or stored. Conservators who were well versed in materials and environmental monitoring techniques were selected as instructors. The course material is very technical and participants must master various concepts and the use of appropriate equipment. Training methods were given careful consideration. There would be required reading assignments, tests, and a research paper. When the participants finished the 10-day course and returned to their parks, they would take with them a special sensitivity for the collection and the means to maintain it.

Skills

The technician is expected to know the relationship between relative humidity, absolute humidity, and temperature, and to monitor those conditions, as well as take corrective action. Visible and ultraviolet light must be mastered in similar fashion. Conservators provide training in organic and inorganic materials and how those materials respond to environmental factors. Because photography is important to both monitoring and cataloging, each participant is expected to learn basic use of a single lense reflex camera. The technician is also expected to know proper storage and exhibit techniques, and basic housekeeping. Most of the sites within the NAR are historic house museums and emphasis is naturally given to those kinds of collections. Phase I would be equally appropriate in other regions by stressing collection types and environmental conditions unique to those regions. The principle text books are **Museum Environment** by Garry Thomson; **Museum Collection Storage** by Verner E. Johnson and Joanne C. Horgan; and **Guide for Temporary Exhibitions** by Lothar P. Witteborg.

Parts of the NAR museum technician training curriculum have been incorporated into the Curatorial Methods course. Both courses have undergone several changes over the years. Unrealistic standards advising that collections be maintained between 45% and 55% relative humidity at 70° Fahrenheit have been abandoned. With few exceptions, such conditions are impossible to maintain either because historic structures provide a poor envelope or because of regional climatic differences. Within the NPS, curators and conservators are beginning to recognize conditions as they really are. This new maturity is reflected in the training programs. We have also come to realize that the old training techniques left much to be desired. It is O.K. to get technical. Quizes not only challenge the participant but also test the merit of the instructor and the training methods. Finally, the participants take away skills that enable them to accomplish things back at the park. The success of the cultural resource preservation program will be determined at the park level and by the day-to-day activities of the museum technician. It is becoming increasingly clear throughout the Service that collection maintenance is an active, not passive, function; that there are certain skills and knowledges pertinent to that function; and that specialized training is necessary to execute that function.

The author is Metals Conservator in the North Atlantic Regional Office.

Preserving Anthropological Collections

Toby Raphael

Anthropological collections play an integral role in telling the story of many national parks. Several parks were established specifically to interpret recent Native American culture and history; others are totally based on archeological evidence and the study of excavated materials. The discipline of anthropology provides the theoretical framework for understanding artifacts which are, for the most part, manufactured by non-industrial societies.

Categories

The objects in anthropological collections generally fall into two categories: ethnographic materials (collected from living ethnic groups) and archaeological material (collected from excavation and surface finds). Together they constitute the material culture of a particular people or time period. In the anthropological perspective, each object is viewed as a tangible historical document, a product of human necessity and cultural tradition. The artifacts not only inform us about their makers, but also preserve (even if only in microscopic form) information regarding their manufacturing methods, function, use and value, and geographic location.

The preservation of anthropological collections is of particular importance because, in the absence of written records, these materials are the main evidence we have for examining the structure and dynamics of past cultures. If we lose these collections, we lose the possibility of verifying our conclusions, or restudying the evidence to come up with fresh hypotheses and explanations. Therefore, the NPS has identified these holdings as an irreplaceable cultural resource and has accepted the responsibility of permanently caring for and preserving these materials as part of its museum collections.

Preservation of such diverse collections, however, is not as easy as preserving other categories of museum objects. During the past 50 years, advances in preservation technology have been primarily in the realm of the fine art museums. Only in the past 10 years or so have institutions with anthropological holdings been working more systematically toward upgrading their preservation techniques. The Service has attempted to keep up with this developing field through the efforts of its four conservators specializing in ethnographic or archeological artifacts—two at Harpers Ferry Center, one at the Western Archaeological and Conservation Center, and one in the North Atlantic Region. The job of the conservation staff is to interpret the current trends and latest developments in the anthropological field for use by park and regional curatorial staff.

Challenge

Anthropological collections present a challenge to both park curators and conservators. These objects are often fashioned from or contain materials close to their natural state, such as bird feathers, animal skin and fur, plant fiber, sea shells, and wood originally used green. Other objects are fabricated from materials that were processed in some way at the time of their manufacture, such as fired clay, spun wool, and chipped stone. These materials, however, deteriorate according to the "laws that govern all matter." Often, all we can do is create a benign environment in an effort to slow down the aging process. In addition, anthropological collections have suffered greatly from sheer neglect because they had not been given the status of fine art collections.

Anthropological artifacts present conservation problems that are somewhat different from those of art or even historical collections. Emphasis is not on the individual object but on large quantities of objects; artifacts are often fragmentary, not whole. Collections are geared toward research rather than exhibition. Entire collections of artifacts may be subjected to laboratory technical analysis, so no change in their chemical composition or structure can be introduced by conservation techniques that would interfere with such analytical procedures.

The preservation strategy most suited for these collections is one that is designed to preserve the largest number of objects possible, with the primary objective being to provide a protective environment. This is achieved through upgrading the collection's storage and display conditions by using uncrowded, dust-free shelving and specimen cabinets, stress-free mounting, and especially by creating a stable climate. When individualized laboratory treatment is required, the goal is one of stabilization of the existing materials and retention of any ethnographic and archeological data. Often during laboratory treatment, significant historical alteration and modifications are uncovered and documented. Restoration of an object's original features is not such a concern as it is within decorative art collections.

Care

The NPS has taken a first step in caring for its anthropological artifact collections. Considering the sensitivity of the materials, the immense size of the Service's holdings and the relatively new and developing state of anthropological conservation, it will be some time before these collections can be considered safe and well protected. Curators and conservators throughout the Service have a difficult but extremely worthwhile task ahead of them.

The author is Ethnological Materials Specialist in the Conservation Division.

Conservation of Furniture

From Russia and Alaska

Alan Levitan

Conservators often get to examine artifacts more intimately during the course of treatment than does the public—or even curators in their normal work routine—and during treatment the secrets of these objects are revealed. Conservation laboratories like the facility at the Harpers Ferry Center provide analytical tools such as microscopes, ultraviolet and infrared light sources, and x-ray equipment that help the conservator determine the object's condition and proper treatment, and in ferreting out curatorial information about the object.

At the Furniture and Wooden Objects Laboratory we generally provide information concerning the kind of wood species, adhesive, finish, and techniques used in fabrication. We help date objects by identifying the type of hardware, nails and screws used in its construction, and by the type of tool marks found on the wood surfaces.

Two Cultures

Over the past two years, the lab has devoted considerable time to the treatment of furnishings from the Russian Bishop's House in Sitka, Alaska. Working closely with the staff curators in the Historic Furnishings Division, we have uncovered interesting information during treatment. We examined and treated the collection as a whole, thereby comparing and relating information from one piece to the next. This was rewarding because little is known in this country about furniture produced in mid-19th-century Russia or Russian-America.

Wall mirror. Break in glue line extends almost entirely across width of mirror below bottom rail. (Photo: Mike Wiltshire)

The furnishings treated in the lab were in the bishop's house between 1843 and 1853, when Bishop Innocent moved to Yakotsk. Some are personal furnishings while others are religious items from the private chapel built as part of the house. The objects fall into two broad style categories: sophisticated design and craftsmanship and much simpler, uneven craftsmanship. In 1849, about 35 pieces of furniture were purchased in St. Petersburg and shipped to Sitka to furnish the bishop's house. Ten of those pieces remained in the church's possession and were ultimately brought to Harpers Ferry for treatment. The less sophisticated furnishings were made in Sitka of local woods. It is documented that the altar, lectern, bishop's throne and vestment cabinet were made in Sitka and put in place at the dedication of the house in 1843. There is an oral history that some of the furniture was actually made by Bishop Innocent himself.

The Chairs

Listed among the furniture purchased in St. Petersburg were six mahogany armchairs, upholstered in velvet, and valued at ninety silver rubles for the set. Five of these original chairs, plus a reproduction made in 1901, came to the lab for treatment. The Empire-style chairs have c-scroll arm supports, flared legs, and an upholstered slip seat. At first glance the chairs appeared to be of typical

(continued on page 8)

From CCC Builders

Ron Sheetz

In 1933, Franklin D. Roosevelt asked Congress to appropriate funds for emergency conservation work, and the Civilian Conservation Corps was begun. Rather than establish a new Federal bureaucracy to administer the CCC, the President used the existing Departments of Interior, Agriculture, Labor and War, and named Robert Fechner to be Director of the CCC.

Windsor chair produced by CCC employees at Colonial NHP

Purpose

The program's purpose was to provide employment and, at the same time, get much needed conservation work done in the national and state parks and forests. On April 17, 1933, in the Massanutten Mountains of the Shenandoah Valley of Virginia, 200 men camped in tents at what soon would be known as Camp Roosevelt, the first CCC camp. By the end of the CCC's 9-year existence, approximately 3 million men were enrolled in over 4,000 camps located in every one of the 48 states and

(continued on page 9)

From Russia and Alaska

(continued from page 7)

construction with the soiled surfaces, veneer losses, and reupholstery one would expect from over a century of use.

Removal of the most recent black oil cloth upholstery revealed another upholstery layer underneath. We found this unusual because generally when a piece is reupholstered the upholsterer removes the previous layer before tacking the new layer in place. We were further surprised to find an earlier floral upholstery under the second layer and then elated to discover the original gold, cut and void velvet upholstery still in place. This material matches that described in the 1848 bill of sale. There are no tack holes under the gold velvet to indicate any previous upholstery layers. This velvet, which on most of the chair seats is in reasonably good condition, is among the oldest in-place upholstery we have seen in the furniture lab. We surmise that it survived because, once having been shipped to Sitka, it was out of the realm of experienced upholsterers. The worker, not wanting to disturb the complex layering of webbing, stuffing and muslin, would be more likely to just tack the new layer over the old and thus unwittingly preserve for us a rare example of mid-19th-century Russian upholstery.

Substructure

The wood chair structure also held surprises for us. In disassembling some of the wobbly joints, we discovered that the wood substructure of the seat, which with the upholstered seat in place appears to be mortised into the chair side, as is normally the case, is actually dovetailed to side rails not visible with the seat in place. This unit, roughly square in shape, is doweled to the interior surface of the chair sides. When the dowel joint is disassembled, it leaves the two side units, each comprised of a seat rail, front flared leg, back post, arm and arm support, and a back and back splat. The side units, which are of mortise and tenon construction with mahogany veneer over visible surfaces, comprise a unit which stacks absolutely flat. The back and back splat whose ends fit into mortises in the back posts also nest well one against the other. The tenon ends of the back and back splat appear to have been finished prior to assembly. This is also unusual since glue adheres better to unfinished surfaces than to finished surfaces. We concluded that the armchairs were made in such a way that they could be shipped disassembled, requiring little space. In all probability the original finish, a spirit varnish, was applied in St. Petersburg prior to final assembly. A mahogany table, also sent from St. Petersburg in 1849, exhibits another construction technique probably dictated by the need to conserve space and decrease the likelihood of breakage during the long trip to Sitka. The base of the table is affixed to the pedestal by a large wooden nut which tightens onto a threaded pin protruding from the pedestal. The table and chairs could be assembled without tools, possible a precursor to today's mass furniture marketing techniques.

Although many of the construction techniques used in the chairs revealed themselves in the disassembly of the weakened joints between the substructure of the seat, the back, and the side units, the construction of the elements within the side units themselves was not readily discernible because veneer covered the joints of the secondary wood. We were able to guess at the construction by examining the veneer under raking light for stresses telegraphed through the veneer in the form of small splits or discontinuities in the surface. The secondary wood should be expected to show stresses because of differential shrinkage and expansion at areas of cross grain joinery such as where seat rail meets legs or arm post meets arm. The joinery at the front of each side element where the seat rail, front leg, and arm support all meet was particularly puzzeling and no hints were found from the examination of the veneer.

We decided to x-ray the joinery of the arm chairs to provide accurate construction drawings to curators who were planning to have reproduction side chairs made based on the style and workmanship of the set of arm chairs. The x-rays showed that the wide tenon of the front leg extended up through the open mortise or bridal joint of the seat rail and received the tenon of arm post in a roughly cut pocket at its upper extreme. This type of joint was unusual to all of us familiar with Western European and American furniture.

Craftsmanship

The level of craftsmanship on the chairs is quite good, so we were surprised to see in the x-ray the wide gaps between the sides of the mortise and the tenon. These joints were still tight in spite of the arduous trips from St. Petersburg to Sitka and from Sitka to Harpers Ferry. The apparent lack of concern about the snugness of fit suggests that the cabinetmaker had great confidence in his glue. The great majority of 18th- and 19th-century furniture treated by our lab was constructed using protein-based glues, derived from either animals or fish. The particular ingredients of the glue varied widely depending on the local availability of species. Generally, protein-based glues are readily soluable in water even centuries after initial application, making disassembly of glue joints relatively easy for 20th-century conservators. The glue used by the St. Petersburg cabinetmakers had incredible holding power and resistance to water. It is possible that the strength of this

(continued on page 15)

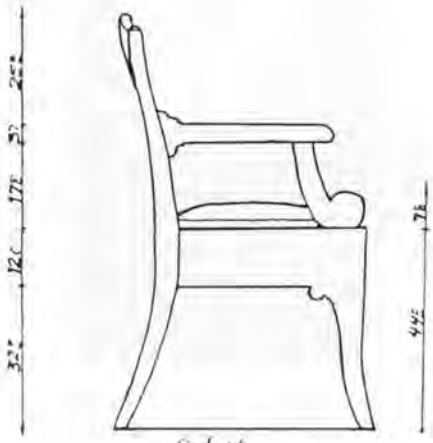

From CCC Builders

(continued from page 7)

Alaska, Hawaii, Puerto Rico, and the Virgin Islands. Initially, the CCC was to enroll 250,000 men, unemployed and unmarried, between the ages of 18 and 25. Twenty-four thousand experienced men were hired to supervise the enrollees.

The CCC was initially created to perform work on natural resource projects. By the end of the first year it was apparent that further training was essential to prepare the men for the work that lay ahead and to provide work skills that many would use when private sector jobs were again available.

Training

Vocational and academic courses were offered to the enrollees. The training varied from camp to camp depending on the preferences of the staff and the enrollee. They built dams, bridges, lookout towers, and even an entire ski area. Other complex projects of job training included masonry and carpentry in the building of many of our national park structures and cabinetmaking to construct furnishings for the buildings.

Among the NPS structures built by the CCC are the Southwest Regional Office building; the superintendent's residence at Crater Lake National Park; Painted Desert Inn in Petrified Forest National Park; the Visitor Center Museum, Tumacacori National Monument; the lodge at Bandelier National Monument; and the museum at Mesa Verde.

Furniture designed and constructed by CCC cabinetmakers is located in most of these structures and in many other NPS buildings. An initial survey conducted in 1983 indicates there are about 600 pieces that were constructed by the CCC for use in visitor centers and historic structures. At Colonial National Historic Park, known as "Colonial National Monument" in the 1930s, the CCC cabinetmakers produced furniture for use in the public buildings, offices, and library. Some of the reproductions such as 18th-century ladder back chairs and a butterfly table, located in the Moore House and the Swan Tavern, were built exclusively for exhibit. The furniture built at Mesa Verde and Bandelier are revivals of Spanish Colonial forms. Bandelier has one of the Service's major collections of CCC furniture numbering approximately 300 pieces.

CCC Employees at Colonial NHP

Last year seven chairs, two end tables, one coffee table, and two metal lamps were shipped from Bandelier to Harpers Ferry for preservation treatment, before being placed in the office of Director Mott. The furniture is constructed from ponderosa pine. The chair seats are woven rawhide. The joinery is mortise and tenon, glued and pinned with half-inch dowels. It appears that most of the sizing of the lumber and joinery used woodworking machinery. The carving and finishing were done by hand. Most of the CCC furniture constructed 50 years ago is of high quality craftmanship. The styles vary, reflecting the region where it was produced.

CCC History

Sarah Olson, Chief, Historic Furnishings Division, is working on a study that will incorporate a history of the CCC cabinetmaking in the NPS; an analysis of the resource value and site significance of CCC collections; and site specific recommendations for treatment and preservation of these collections. Once the study is completed, it should be implemented as soon as possible since the history of CCC cabinetmaking remains largely unwritten, and the CCC cabinetmakers and project administrators are disappearing as sources of information.

The 50th anniversary of the CCC in 1983 brought a renewed interest in the significance of the group's work. Since the NPS is one of the major custodians of CCC-produced furniture, it has a large role to play in the preservation of the collections. One of the problems in preserving the furniture is that a good deal of it is still being used by the parks. We should pull from our collections at least representative examples and one-of-a-kind pieces to be placed in proper storage, thereby ensuring their preservation. If the objects are to be used, great care should be exercised in recognizing their historical significance. Who knows what the importance and value of CCC-produced furniture will be when their 100th anniversary is celebrated?

The author is Furniture Conservator in the Conservation Division.

The U.S. Constitution National Historic Landmark Theme Study

Harry A. Butowsky

On March 13, 1984, Chief Justice Warren Burger; Howard Westwood senior partner of the law firm of Covington and Burling; and Edwin C. Bearss, Chief Historian of the National Park Service, met in Washington to discuss a proposed National Historic Landmark Theme Study of the Constitution of the United States as part of the commemoration of the Bicentennial of the Constitution. At this meeting, the participants agreed to identify sites associated with the Supreme Court's landmark decisions that have resulted in the growth of the Constitution and that have had such a tremendous effect on our Nation, particularly in defining the powers of the branches of the Federal government and the rights and responsibilities of the States and the people. The study was also to identify and recognize sites associated with the giants of the court.

To begin the study, William H. Allen of Covington and Burling, and one-time law clerk to Chief Justice Earl Warren, was asked to prepare a list of cases for consideration. He selected 123 cases that reflect a wide body of opinion regarding what is significant.

In August 1985, I began to work on the Constitution Theme Study. After reviewing the material prepared by Mr. Allen, I decided to make the U.S. Constitution National Historic Landmark Theme Study as comprehensive a survey of properties associated with the history and development of the Constitution as possible within the time allowed for its completion. I decided to add a number of cases that were of historical significance, although not necessarily significant in terms of current case law. In addition to examining cases, I investigated sites associated with the signers of the Constitution not already designated as National Historic Landmarks, justices of the Supreme Court and other courts, famous lawyers and scholars of the Constitution, and sites associated with significant events in the history of the Constitution.

First Bank of U.S. (Independence National Historical Park Collection)

After a year of thorough study and review, the U.S. Constitution National Historic Landmark Theme Study is now complete. As a result of this survey, five properties were recommended for designation as National Historic Landmarks in this theme. On April 9, 1987, the National Park System Advisory Board considered and approved the nomination of these five properties as National Historic Landmarks illustrative of the continuing history and development of the Constitution of the United States.

The U.S. Constitution National Historic Landmark Theme Study is organized into three sections: the introductory essay which includes the result of the survey of 155 cases/sites studied in this effort; the nominations of the five properties recommended for designation (described below) as a result of this search; and a list of 165 existing National Historic Landmarks and units of the National Park System that are significant in one or more areas of the history of the Constitution. As a result of this survey, virtually all sites related to the Constitution have been either identified, nominated, or excluded for some reason.

First Bank of the United States
(Philadelphia, Pennsylvania).

The proposal to charter the First Bank of the U.S. provoked the first great debate over strict, as opposed to an expansive, interpretation of the Constitution. In adopting Alexander Hamilton's proposal and chartering the bank, both the Congress and the President took the necessary first steps toward implementing a sound fiscal policy that would eventually ensure the survival of the new Federal government and the continued growth and prosperity of the U.S.

Second Bank of the United States
(Philadelphia, Pennsylvania).

The Second Bank of the United States is associated with the Bank War in the

Second Bank of U.S. (Independence National Historical Park Collection)

1830s betweeen President Andrew Jackson and the Congress. This event reopened the debate over the constitutionality of the Second Bank of the United States and the Supreme Court's decision in *McCulloch v. Maryland,* (1819). President Jackson's veto of the bank bill anticipated later presidential vetoes and the growth of the system of checks and balances inherent today in the relationship between the executive, legislative, and judicial branches of government.

Pittsylvania County Courthouse
(Chatham, Virginia).

The case of *Ex parte Virginia* (1878) resulted from an action in 1878, when Judge J.D. Coles excluded Black citizens from serving as grand and petit jurors in Pittsylvania County, Virginia. As a result of this action, Judge Coles was arrested and charged with a violation of the Civil Rights Act of 1875. After his arrest, Judge Coles filed a petition with the Supreme Court asking that he be released from custody and that all charges be dropped on the grounds that his arrest and imprisonment were not warranted by the Constitution and the laws of the United States. In this case, the Court held that Judge J.D. Coles' action was a violation of the Civil Rights Act of 1875 and the equal protection clause of the Fourteenth Amendment and denied his petition for release.

Ex parte Virginia represents one of the few victories for Blacks in the federal courts in the generation after 1865. After 1865, Black Americans fought for their political and civil rights and took case after case to the Supreme Court. *Ex parte Virginia* was a victory in this struggle because the issue involved the clear attempt by a state official to deny citizens within that official's jurisdiction the equal protection of the laws—a protection guaranteed by the Fourteenth Amendment to the Constitution. While the States retained their primary responsibility and power to regulate civil rights, they were no longer autonomous. *Ex parte Virginia* showed that the Federal government now had a qualified but potentially effective power to protect the rights of American citizens.

The Sumner Elementary School
(Topeka, Kansas).

In the case of *Brown v. Board of Education of Topeka* (1954), the Supreme Court concluded that "separate educational facilities are inherently unequal," thus effectively denying the legal basis for segregation in 21 states with segregated schoolrooms and starting a revolution in the legal status of Black Americans that still continues. The Sumner Elementary School refused to enroll Linda Brown because she was Black, thus precipitating the case that gave its name to the Supreme Court's 1954 decision.

The Supreme Court Building
(Washington, DC).

The Constitution, ratified in 1788, provided in Article III for the creation of a new national judiciary, vesting the entire judicial power of the Federal government in one Supreme Court and in such inferior courts as the Congress might from time to time ordain and establish. Although the matter of constituting the structure of the judicial department of the Federal government was one of the first matters addressed by the Congress, and the first session of the Supreme Court was convened on February 1, 1790, it would take 145 years for the Supreme Court to find a permanent residence.

The construction of a building exclusively for the use of the Supreme Court was a reaffirmation of the Nation's faith in the doctrine of judicial independence and separation of powers. The ideal of separation of powers had been of the utmost concern to the delegates to the Constitutional Convention of 1787. James Madison, writing in *The Federalist Papers, No. 47,* stated "...the preservation of liberty requires that the three great departments of power should be separate and distinct." The construction of a magnificent building exclusively for the use of the Supreme Court was a dramatic illustration of a commitment to the early Republic's faith in the separation of powers.

The author is a historian in the History Division, WASO. Dr. Butowsky is the author of "Warships in the Pacific—A Theme Study" (*CRM Bulletin,* October 1985); and "Space—These Are the Voyages of..." (*CRM Bulletin,* April 1986).

National Historic Landmarks

The National Park Service conducts the National Historic Landmarks Program to identify, designate, recognize, and protect buildings, structures, sites, districts, and objects of national significance. These properties commemorate and illustrate the history and culture of the U.S. Landmarks are identified by theme, and special studies are prepared or overseen by Service professionals. Nominations for designation are then evaluated by the National Park System Advisory Board, a committee of scholars and other citizens. The Board recommends properties for designation and decisions on designation are made by the Secretary of the Interior. There are more than 1,700 National Historic Landmarks.

Museum Collection

(continued from page 3)

El Morro also tried several empirical methods to conserve the inscriptions inviolate. Here the Service attempted a potentially wiser approach, which, although unsuccessful at the time, pointed in the direction that object conservation would eventually need to move. The Service sent two or three cubic feet of the weathering rock to the National Bureau of Standards for study and experiment, hoping to find a way to consolidate the stone.

Museum Division Created

NPS activity in object conservation increased when a museum division was established in the Washington Office in 1935. The division set up a museum laboratory, primarily to prepare exhibits but staffed with preparators having craftsmen's knowledge of materials and techniques as well as manual skills applicable to work on objects. Also, in 1935, the Field Division of Education in Berkeley sent a memorandum to western parks on the care and preservation of museum specimens. The memorandum gave advice on first-aid treatment of artifacts and cited two publications actually based on early studies using the scientific approach to conservation. One was Harold Plenderleith's booklet, *The Preservation of Antiquities,* derived from work at a conservation laboratory in the British Museum. The other, *Technical Methods in the Preservation of Anthropological Museum Specimens,* by Douglas Leechman, was a bulletin of the National Museum of Canada. Leechman had even studied the conservation problems of totem poles. The Museum Division promptly distributed copies of both publications to the parks.

Typical of the state of object conservation in the late-1930s, the division sent one of its curators on temporary assignment to George Washington Birthplace National Monument where an archeological excavation was in progress. To prepare some specimens from the dig for display the curator used 10% acetic acid to clean brass objects and coated them with celluloid dissolved in acetone.

Jamestown Lab

A larger archeological project was under way at Jamestown where a laboratory was set up to clean and treat the very large number of artifacts recovered. Manned by CCC enrollees, the laboratory used electrochemical baths to remove rust from iron objects, then dipped the artifacts in melted paraffin. Lee G. Crutchfield, one of the CCC supervisors, published an article on "The Chemical Preparation and Preservation of Museum Antiquities" in *Museum News* (June 15, 1937). This marked another step toward a more scientific approach, although electrochemical reduction did not provide the permanent results anticipated.

As another example of nascent scientific conservation, the Museum Division in 1940 submitted samples of wood from the saltpeter vats in Mammoth Cave to the Bureau of Chemistry and Soils for analysis before proposing preservative treatment. That same year the division established contact with the National Archives where a paper chemist had developed conservation procedures involving the lamination of documents in cellulose acetate. The Archives laboratory made a start on laminating important historic papers for the parks.

More characteristic of the times, however, was the Museum Divi-

(continued on next page)

Windsor Bench produced by CCC employees at Colonial NHP

sion's continued reliance on its exhibit preparators to conserve objects by empirical methods. In 1938, for example, it lent a preparator to a West Virginia state park to supervise CCC enrollees in cleaning and treating a sizable collection of old guns and antiques. Preparators at the museum laboratory similarly treated some prime historic objects for display in national park museums in 1940. Drawing principally on the empirical approach, the long technical chapter in Ned Burns' **Field Manual for Museums,** published for the Service in 1941, provided a widely used compendium of the methods then considered good conservation practice.

Artistic Objects

World War II greatly curtailed the Service's active conservation of objects for several years. But even at the end of the war the Service, like the great majority of museums, had become barely aware of the signal progress that had laid foundations for a professional discipline of object conservation. In this country, the seeds had been planted at Harvard University's Fogg Art Museum in the 1920s. Beginning as a course in the history of artists' techniques, it became a department of technical studies in 1929 and later a department of conservation. It produced the first generation of trained American conservators. As a key member of the Fogg staff, Rutherford J. Gettens, a chemist, critically analyzed materials comprising works of art and the changes they underwent. The department published a scholarly journal and developed scientifically-tested methods to replace the arcane practices restorers had used for centuries.

The NPS had immediate need for just such expert knowledge in 1948. The budget allowed $10,000 to stabilize the badly deteriorated Gettysburg cyclorama acquired during the war years. Evidently insufficiently aware of what had developed at the Fogg Museum, the NPS contracted with a traditional mural expert who did the work, using such obsolete methods as soap and water for cleaning and animal glue to attach reinforcing bands. A year later, with crumbling plaster threatening to destroy the fragmentary remains of the mural paintings in the old mission church at Tumacacori National Monument, the Service attempted to get state-of-the-art advice by engaging Gettens from the Fogg Museum to study the problem. Gettens formulated a synthetic resin spray to strengthen the plaster and analyzed pigments used in the paintings.

By 1950 the Museum Branch had funds to hire a trained conservator and Elizabeth H. Jones from the Fogg staff was hired. She set up a minimally equipped laboratory and launched the true NPS conservation program. She cleaned and restored paintings expertly and began surveying the condition of important park collections. She was succeeded by Walter J. Nitkiewicz, trained in the Fogg methods as an apprentice to Alfred Jakstas. Nitkiewicz practiced his profession as a Service employee with outstanding skill for the remainder of his life.

Historic Objects

One professional conservator could not hope to cover the wide range of needs in the parks. Harold L. Peterson, coming to the Service as a curator in 1947, brought a special sensitivity to the conservation needs of historic objects. Early in the 1950s archeological work resumed at Jamestown. Peterson, recognizing the need to give prompt and proper treatment, helped establish a project laboratory at the excavation site. The Service employed a professor of chemistry and two graduate students from William and Mary College to conduct the treatment. To assure further the quality and competence of this enterprise, Peterson persuaded the Museum Branch to hire a conservator to work full-time at the Jamestown laboratory. His choice was Harry Wandrus who had a solid background in chemistry, a keen appreciation of historic artifacts, and hands-on skill in working with them.

The work at Jamestown terminated in 1954 and Wandrus became the objects conservator in the Museum Branch laboratory. Through diligent study and successful practice he established a firm reputation among conservators, curators, and collectors. Historic artifacts constituted too big a workload for one conservator, so the branch assigned him a helper about 1956. Edward Brown replaced the first assistant in 1961. Wandrus trained him well along with two conservators in succession assigned to the Western Museum Laboratory in San Francisco. When Harry Wandrus died near the end of 1965, Edward Brown succeeded him.

Growing Need

One or two conservators to work on artifacts could not cover equally well the many types of objects involved. During the 1950s and 1960s, therefore, the Museum Branch and its successors turned regularly to the National Archives for help with documents; to the Textile Museum and its chemist consultant in the treatment of flags, costumes and coverlets; and to Colonel Paul Downing for advice on vehicle restoration.

The paintings and prints in park collections also demanded more care than one conservator could provide. This became particularly evident when Walter Nitkiewicz had to undertake such massive projects as the Old St. Louis Courthouse murals and the Gettysburg cyclorama which required his full attention for several years. In 1956 Anne Clapp was hired. She set up a branch laboratory at Independence National Historical Park where she worked especially on the great collection of portraits of the Nation's Founding Fathers. She also restored the mural eagle in the Senate chamber of Congress Hall. When her former mentor at the Fogg Museum asked for her help at the Intermuseum Laboratory, she left to become the paper conservator at Oberlin. The NPS did not obtain a conservator for prints and other works on paper until 1970 when Janet Stone, trained in the Institute of Fine Arts Conservation Center at New York University, joined the laboratory staff.

Object conservation for the Service required other initiatives. In 1954 the Museum Branch helped sponsor a branch laboratory at Gila Pueblo to treat as well as catalog

(continued on page 14)

Musem Collection

(continued from page 13)

the archeological collections assembled there from Southwestern parks. In 1963 the branch began circulating to the parks instrument kits for measuring environmental conditions in collections. It took advantage of available conservation training opportunities and closely followed the growing professional literature.

The work of the professional conservators remained the heart of the program. Their numbers grew slowly, but saw an important boost in 1966. That year Harold Peterson hired Ralph Sheetz, a highly skilled cabinetmaker and furniture restorer. The same year James B. Smith, technically trained in the Armed Forces Medical Museum, became assistant to objects conservator Edward Brown.

Establishment of the Harpers Ferry Center marked a temporary setback for the conservation program. Funds to build the center failed to provide quarters for the laboratories conservation work required. Even after they could all be moved to Harpers Ferry, they were scattered in five makeshift locations. The turning point came in 1972 when Arthur Allen, assistant chief of the Branch of Museum Operations, moved the conservators into the Old Shipley School. The building provided space for specialized conservation laboratories.

When reorganization created a Division of Museum Services in 1974 with Allen as chief, he had seven professional conservators on the staff, each with an operational laboratory in the building. By 1980, the Branch of Conservation Laboratories within the division had ten professional conservators with a support staff of nine, plus a succession of able interns and apprentices. A further reorganization in 1982 separated the Harpers Ferry Center conservators from the curatorial functions with which they had been associated, but left them with the Harpers Ferry Center to carry on their work, primarily on conservation of objects going into exhibits.

The author is the former Chief of the Branch of Museum Operations, and is currently a Volunteer-in-the-Parks with the Curatorial Services Division, Harpers Ferry.

Museum Conservation Organizations

Anthony M. Knapp

The following organizations offer assistance to conservators. They provide information for a better understanding of the conservation profession, as well as describing the work that is being conducted in the various specialized areas of conservation.

The American Institute for Conservation of Historic and Artistic Works (AIC) is this country's professional organization for conservators. The AIC offers three categories of individual membership. The Associate category is open to any person interested in conservation. The Professional Associate and Fellow categories are open to practicing conservators. This organization published the *Code of Ethics and Standards of Practice* for practicing conservators. It publishes a biannual journal and a monthly newsletter.

The American Institute for Conservation of Historic and Artistic Works (AIC)
3545 Williamsburg Lane, NW
Washington, DC 20008
202/364-1036

The National Institute for the Conservation of Cultural Property, a nonprofit organization, works to further the national policy for the preservation of the cultural heritage of the United States. The Institute's brochure states its objectives as follows: "provides a national forum for cooperation and planning among institutions and programs concerned with preserving our nation's cultural heritage; helps to meet national conservation needs through information programs and projects in support of scientific research and professional training; and enhances public understanding of conservation and increases support for conservation efforts throughout the United States." Recent projects undertaken by the NIC to support the conservation profession include: publishing studies on training in archeological and ethnographic conservation and on environmental standards for the preservation of archival materials; and undertaking pilot projects on the training of museum collections care specialists and on the identification and preservation of historic outdoor monuments in America. Institutional membership in the NIC is available through election to the Institute's Council. The Service is a member of the NIC.

The National Institute for Conservation
A & I - 2225, 900 Jefferson Drive, SW
Washington, DC 20560
202/357-2295

The Getty Conservation Institute (GCI) "aims to further scientific research, increase conservation training opportunities, and strengthen communication among specialists." This organization has established the following three programs in support of its goals: the Scientific Research Program, the Training Program, and the Documentation Program. The Documentation Program is invaluable to the conservation profession and, in a larger context, the museum field. This program provides a vehicle for the exchange of existing and new information and for publishing reference and other resource materials related to conservation. This organization publishes a handsome newsletter three times a year. To receive the newsletter, write to the following address:

The Getty Conservation Institute
4503-B Glencoe Avenue
Marina Del Rey, CA 90292

There are also several regional conservation organizations. Contact your regional curator for the name and address of ones located in your area or write to the AIC for a current list of such organizations.

The author is staff curator, Curatorial Services Division, WASO.

From Russia and Alaska

(continued from page 8)

glue induced the Russian cabinetmakers to use joinery techniques not common to American and Western European cabinetmaking tradition.

The two mahogany veneered wall mirrors noted in the 1849 bill illustrate such a glue joint. The mirrors are tall in relation to their width, made to hang on the wall between two high windows. They are constructed in the usual rail and stile technique. However, to achieve the elongated effect, boards are glued to the top and bottom edges of the rails with cross grain, glue blocks affixed in the middle and on end, and a continuous piece of veneer adhered to the front surface of both. At the bottom of one of the mirrors the extreme cross grain shrinkage of the board did not dislodge the glue block, forcing it away from the glue joint. The only portion of the bottom board remaining attached to the mirror frame was adhered to the end grain of one stile. Theoretically, wood end grain has little glue holding power; yet this small area of the glue joint prevented the bottom board from breaking loose entirely and being lost. When glue joints had to be disassembled in the lab for treatment, use of steam was the only effective means.

In an effort to determine which objects were constructed in St. Petersburg and which in Sitka, eight wood samples were removed and sent to the Forest Products Laboratory in Madison, Wisconsin. Identification of the secondary wood of veneered pieces can generally provide an indication of its place of manufacture. While the veneers of exotic species found their way from the new world to the old at a very early date, secondary wood usually came from the locality of manufacture. Unfortunately, the secondary wood of the mahogany veneered pieces could be identified only as coming from the red pine group. Species within the group are found both in North America and in Europe and Asia. Samples taken from other pieces were identified as being in the spruce and birch families, species of which are found in the Eastern and Western Hemispheres. Only the sample removed from the vestment cabinet, identified as Alaska-cedar, provided corroboration for provenience documented by correspondence of the period. A few feather particles had worked their way through the muslin cover of the bishop's throne seat. We attempted to identify those feathers as being from Old World or New World species. The particles were sent to a feather identification expert at the Smithsonian Institution who identified them as Mallard and Common Merganser. Unfortunately, both species are found in Russia and Alaska.

Paint Analysis

Many pieces from the bishop's house, which by their style and workmanship appear to have been made in Sitka, were painted many times. It is not unusual for utilitarian furniture to receive repeated coats of paint. However, the type of paint found on these pieces is unusual. For example, the most recent five layers of paint found on a small stool which would have been placed next to the Bishop's throne were alcohol soluble, the next three layers appear to be oil-based and the earliest paint layer was a water soluble blue. Traces of this paint layer appear on a matching stool which had previously been scraped down to bare wood and refinished, and as a ghost mark under shelves on the side of the vestment cabinet. With this evidence, the staff made a decision to paint the sanctuary furniture blue to match the traces found on the furniture and on the walls of the sanctuary.

After attempting to mix water soluable paints from vague old recipes which provided the ingredients but not the proportions, we located a source for commercially prepared Kalsomine paint powder. Prussian blue, common in the 19th century, was identified as the likely pigment. Further, this pigment and whiting and hide glue were among the materials sent to Sitka for the repair of the Bishop's House in 1852. We attempted to match our paint to the matt blue water-based paint on the rear surface of one of the icons presently in the paintings lab for treatment. That paint layer appeared original and being on the rear surface of the icon would not have been faded by the sun. Our initial attempts to match the hue failed. No matter how much pigment was added to the mix our sample turned out too light. Experimentation eventually showed that the commercially available Prussian blue pigment required extensive grinding with a muller on plate glass in order to arrive at a darker hue.

The large vestment cabinet had been situated on the south wall of the sanctuary. The rear of the cabinet is comprised of nine boards of varying widths set horizontally in a groove daddoed into the rear edge of each side panel. To allow for seasonal shrinkage and expansion, the boards are free to move in the groove. Paper had been adhered to the seams between the boards probably to prevent dust from entering the gaps and soiling the vestments stored within. Four of these paper strips appear to be comprised of pages from Russian ledger books similar to those used on the seams of walls of the house itself. (See *NPS Courier*, February 1987.) The quality of the ink and paper and the fact that the rear of the cabinet did not receive direct light combined to preserve the clarity of the ledger pages.

The ongoing preservation work on the collection from the bishop's house has provided us at the furniture conservation lab an opportunity to closely examine furniture from two areas and cultures, St. Petersburg and Russian-America, which as Americans we rarely get to see even in photographs. Examination has disclosed variations in materials and construction techniques which are outside of the American and Western European cabinetmaking traditions. We hope that some of the information we have uncovered contributes to a better curatorial understanding of the objects and in turn a better understanding of these two 19th century cultures.

The author is Associate Conservator of Furniture and Wooden Objects in the Conservation Division.

A Tale of Two Hats

Fonda G. Thomsen

Often the professional conservation staff is thought of only as "fix-it" people and is under-utilized by the park. In addition to their broad scope of concerns in providing a suitable environment for museum objects, their in-depth study of the objects they work on can unveil a wealth of information for the historian and interpreter to develop into a more interesting program for the public. One such story was the results of the research into the flags from Ft. Sumter. A study of the materials of the two flags revealed that the tattered and patched garrison flag was incorrectly regarded as the banner that flew during that fateful night. The smaller storm flag was the one that had witnessed the event. For years it was assumed the opposite was true and the garrison flag was pictured in many creditable publications. These assumptions are made far too often.

The textile conservation laboratory in the Conservation Division can tell many stories of incorrect identities and just plain fakes. This is especially frequent in the area of military history where there is so much interest in reenactment and obtaining or copying the Holy Grail. As a preliminary to preservation of any historic object, the conservator carefully studies the object to determine its materials, condition, and what factors contributed to its present state. The studies often reveal inconsistencies that are a clue to alteration. Just because an object has been altered doesn't mean it's a fake, however. Any object in use is often altered. A soldier wore a coat in the service, brought it home, had it altered and wore it as a civilian. This is part of the story of that object—the uniqueness that makes it special. Once the conservator has sorted out these alterations, identified the materials and their possible time period, the curator or historian determines how the piece will be used.

Shako, U.S. light artillery gunner, full dress. Considered for purchase.

Far too often other alterations are found where replacement pieces have been added that were never a part of the object's history. For example, one day a curator thought he had discovered an authentic shako (U.S. Light Artillery, gunner, full dress) with its dusty red plume and bright red cord. The sweat and wear marks around the hat band showed its hard use. It was remarkable how a soldier gave this hat such heavy use but never soiled or disturbed the shiny bright cord. The conservator took the object to the laboratory where the cord was removed and the hat given careful scrutiny. The leather topped crown of the hat was bright and unscratched while the hatband showed excessive wear. The stiff inner lining of the crown was insect-damaged while the blue wool outer cover was in excellent condition. There was a repair on the brass eagle and the crossed cannon was devoid of any corrosion. The conservator telephoned the curator to indicate the materials of the hat itself were not consistent. The curator said they had another one that was authentic but in terrible condition. This then allowed the conservator to compare a known with an unknown.

Hats Compared

The two hats were placed side by side and the study began. First, overall appearance was studied. Size, shape, materials and methods of construction were recorded. Second, signs of aging and use were compared. Corrosion on the brass, wear marks, and deterioration of the materials were studied under the microscope, and noted. Third, samples of both materials were microscopically identified and comparisons made.

The hat submitted for purchase was not what it was represented to be. The brim and leather hatband were fitted with a stiff crown from the period and covered with a new piece of fabric. Another leather top crown had been added which could also have been from the period, but was smaller than the rest of the crown. It did not belong on this hat. A leather tab, using old leather, had been sewn on the inside of the front to hold the end of the plume. An old brass eagle and new reproduction crossed cannon was mounted on the front. An old plume, not original to the hat, was placed along with new brass side buttons to hold that bright red cord, old but not original, to this hat.

The other hat was indeed consistent and appeated to be what it was purported to be. The conservator produced a treatment proposal for the preparation of the true original for exhibit. The cost was less than the newly purchased hat, but even more important, we had a piece with the integrity we want to present to the public and the public expects from us.

The author is a Textiles Specialist in the Conservation Division.

Conservation–The Future

Tom Carter

Forecasting what the future holds for objects conservation in the NPS is largely guesswork, at least in such matters as to how many conservators or laboratories there will be. There is no master plan to guide us. However, current trends in conservation probably give good indications of where we are heading.

Preventive Conservation

Foremost among these trends is the increased attention being given to the preventive aspects of conservation. We are in the era of preventive conservation and all signs point to this as an ongoing focus of activity in the museum world at large, as well as in the Service.

Preservation of cultural resource objects has long been a part of our mandate in the Service, but only in recent years have we become sufficiently aware, concerned, knowledgeable, and capable of making a major effort in this direction. It is widely realized that we make little headway by treating objects and then returning them to poor environments where deterioration resumes. The job of preservation isn't solely in the hands of the specialists who do conservation treatments. It is also a responsibility of those who make decisions about museum environments, and how objects are exhibited, stored, and handled. An emphasis on preventive conservation makes it a team effort. In the future, conservators are certain to have closer working relationships and more joint projects with curators, historic preservationists, archeologists, and other NPS staff.

Preventive conservation is given a high priority in the Servicewide "Curatorial Strategy for 1984-1990." The goal is to "bring storage and exhibit conditions to an acceptable state for all collections." Adding impetus to this strategy is the revised "Special Directive 80-1," issued by Director Mott last year. Guidelines are given for meeting NPS standards for the preservation and protection of museum objects. Every park was directed "to complete a museum storage and security inspection to identify any deficiencies and, then, program to correct the deficiencies." The new **Museum Handbook, Part I,** to be published later this year, also emphasizes preventive care.

Expanding Roles

While all NPS conservators continue to do treatments, they are spending more time with curatorial training, conservation surveys of collections, overseeing contracting, and consulting with other staff members about museum objects. For instance, at Harpers Ferry Center, the conservators act as "conservation coordinators" for exhibits containing museum objects. They advise planners, designers, and production staff; review plans; assist with mounting; and have collaborated in the design of exhibit cases to satisfy preservation requirements.

Possibly some NPS conservators hired in the future will devote full-time to other aspects of conservation. Outside the Service, several museums now employ conservation specialists who are, essentially, non-practitioners. There are "exhibits conservators," for example, who may do only minor treatments as a part of their work with exhibits.

These expanding roles make staying current professionally in a rapidly growing field even more of a challenge. In fact, there is a developing role for staff conservators just in maintaining contact with the international informational network in conservation, to keep Service programs up-to-date.

Curatorial training in collections care will probably continue to increase. The Curatorial Methods training course has always included conservation—in particular, preventive conservation—so that by now knowledge about effective measures for preserving museum collections has been widely diffused. Conservators have helped regional curators with similar training.

Brigid Sullivan, conservator at the Western Archeological and Conservation Center (WACC) in Tucson, gave a preventive conservation course last fall for the curatorial staff, while the North Atlantic Region has developed a museum technician training curriculum to give park staff an in-depth exposure to the principles of collections care (see article elsewhere in this issue). Both courses are models for the future and presumably will be repeated periodically.

Other Trends

The curatorial strategy gives further indications of future directions in NPS conservation. One is the establishment of regional laboratories, a development supported by the Chief Curator. There are already laboratories at the Western Archeological and Conservation Center and at the North Atlantic Historic Preservation Center in Boston.

WACC is specializing in the conservation of objects from a specific climatic zone—the arid southwest. This is not restricted by NPS regional boundaries, and therefore includes parts of three regions—Western, Southwest, and Rocky Mountain. Locating regional labs according to climatic zones may reduce relative humidity problems, a major consideration in dealing with museum objects.

WACC also provides other curatorial and collections management services. Having experts from various related specialties together in one location simplifies consultation and encourages an interdisciplinary approach when that is desirable. Surely this will take on increased importance in the future, as there are many situations where conservators and other NPS staff have interrelated concerns and might be sharing expertise to good advantage.

(continued on page 18)

Conservation

(continued from page 17)

In the North Atlantic Region historic preservationists, archeologists, and conservators have been located together at the Charlestown Navy Yard. They are currently planning a joint move to the Boote Mill building at Lowell NHP. There has been discussion of creating a cultural resource preservation center at Lowell, organized to strengthen cooperation and coordination among the three groups.

Proximity to collections is a major advantage of regional laboratories. Travel is minimized for both objects and staff when labs are located in areas where major collections are clustered. This makes possible the ongoing close contact of conservators with park collections and curatorial staff—a very desirable arrangement for conservation. On the other hand, regional laboratories are not likely to have a full complement of specialists, since this would mean hiring as many as eight or ten conservators just to handle the main classes of objects in our collections. Conservation is increasingly specialized—a trend that is likely to continue.

At least a partial solution to the problem of obtaining the necessary expertise is to use cooperative agreements and other arrangements with outside organizations. This is encouraged in the Servicewide curatorial strategy, and several cooperative agreements already exist in the conservation area. For example, the Southeast Region is obtaining assistance in treatment and research from conservation analytical labs run by the State of Florida.

Maintaining the in-house capability to do conservation treatments requires modern laboratories. In addition to the new facilities at Lowell, a new building is planned for the conservators at Harpers Ferry Center. Adequate environmental control for the conservation laboratories and object storage areas has been requested by the conservators. Areas of partcular concern include relative humidity levels, ventilation, and air filtration.

Another trend in conservation is the increased need for scientific support in all aspects of the work. Probably this will be provided in a variety of ways, including cooperative agreements with other organizations.

Looking Ahead

With an eye to the future, NPS conservators from Harpers Ferry Center, NAR, and WACC met in Harpers Ferry last fall to present their views on the state of conservation in the Service. This was the first such meeting, perhaps marking the beginning of a more concerted approach to conservation. As it stands now, conservators are attached organizationally at several different points in the system and do not function as a coordinated group. It was noted that there is no "sustaining structure or umbrella" which would make conservators a more integral part of cultural resource management. NPS policies, standards, and guidelines have been formulated; curatorial staff is increasing; and there is considerable activity in conservation throughout the Service. Yet conservation specialists continue to provide services largely on an *ad hoc* basis. Perhaps the benefits of having staff conservators will be more fully realized through new organizational arrangements in years to come. Quite possibly the future will see conservators more actively involved in management relating to the preservation of museum objects.

Advocacy for conservation in connection with museum collections is an important part of an agenda for the future. Increasing management's awareness of collections care issues is essential, but another aspect of advocacy is to include conservation of cultural resource objects in interpretive programs, and thereby attempt to "share effectively with the public our understanding of critical resource issues."

The author is Paintings Specialist in the Conservation Division.

New On The Market

Planning Our Museums, edited by Barry Lord and Gail Dexter Lord; 309 pp, looseleaf binder; $24.50 or $21.95 to members of the American Association for State and Local History (AASLH). Addressed to museum professionals, architects and designers, boards and committee members, the publication is a comprehensive guide through the often bewildering array of drawings, programs, analyses, and presentations that are a part of museum building projects—new construction, rehabilitation and renovation. Order from AASLH, Suite 102, 172 Second Ave., N., Nashville, TN 37201. Include $2.00 for postage and handling of first book, $.50 for each additional book.

America's Architectural Roots: Ethnic Groups That Built America, edited by Dell Upton; 200 pp; $9.95 pb. A wholly new way of viewing American buildings, this pocket-sized book features 22 groups and traces settlement patterns, building types and technologies and decoration, paying special attention to problems such as adapting Old World building techniques to America's terrain and climate. The first book to view the rich array of ethnic architecture in America, "Roots" explores the forces that influenced immigrants' designs.

Industrial Eye. Photographs by Jet Lowe from the Historic American Engineering Record; Introduction by David Weitzman; 128 pp; $34.95 hb. More than 120 breathtaking color and duotone photographs are featured in this album of an industrial America that few people have seen—famous landmarks such as the Statue of Liberty as well as less celebrated, but just as awesome, achievements—bridges, power plants, windmills and dams. The introduction describes the significance of our industrial heritage and the tangible relics of the industrial revolution that changed the face of America.

Order "Roots" and "Eye" from the Preservation Shop, National Trust for Historic Preservation, 1600 H St., NW, Washington, DC 20006. Include $3.00 for postage and handling for each book.

Announcements

Campbell Center Workshop

The Campbell Center for Historic Preservation Studies announces its 8th year of instruction with 25 summer workshops, scheduled from June 15 through August 7. The major program areas include Architectural Preservation, Museum Collections, Furniture Conservation, and Interdisciplinary Studies.

Learning opportunities at the Center are enhanced by using "hands-on" experiences and by the high level of interaction among the participants as well as between the participants and the instructors. The complex is part of the Mt. Carroll National Register Historic District which extends through the residential and commercial districts of the town. For further information contact: R.H. Seitner, Executive Director, Campbell Center, Box 66, Mt. Carroll, IL 61053.

CRM Bulletin Gets Contributing Editor

Beginning with this issue, the *Bulletin* welcomes Rocky Mountain Region's Michael G. Schene as a regular contributing editor. Regional Historian at ROMO since 1980, Michael has extensive cultural resources management experience working in the 42-park region. He has written articles for many professional journals and recently served as guest editor of a special issue of *The Public Historian*, "The National Park Service and Historic Preservation," to be published in May. From his vantage point at ROMO, Michael will help ensure that articles in the *CRM Bulletin* reflect the interests of the parks, regions, and States.

Call for Proposals

The Program Committee of the National Council on Public History requests proposals for sessions at its annual meeting in Denver, March 3-6, 1988. The theme will be: "Our Nation's Heritage: Preserving and Interpreting America's Past." Proposals must relate to the theme and can include issues such as archives, libraries, cultural resources management, museums, teaching, film, management, politics and policy, and interpretation. Deadline for the session proposals is September 10, 1987. For more information write Brit Storey, Co-Chair, Program Committee, National Council on Public History, 7264 Otero Avenue, Littleton, CO 80123.

National Historic Preservation Week

In celebration of National Historic Preservation Week, the Hammond Historic Preservation Commission, in conjunction with the City of Hammond Department of Planning, is sponsoring two public information sessions on various subjects of historic preservation on May 9 and 16 from 8:30 a.m. to 1:00 p.m.

The sessions will focus on proven and inexpensive steps for interior and exterior historic renovation of older homes which may be accomplished by the individual property owner. Some of the topics include: An Identification of House Styles Through Architectural Clues; Planning a Feasible Renovation of the Older Home While Maintaining Its Architectural Character; and How-To's in the Preservation of the Older Home. For more information on these sessions, contact Valerie Dehner, Department of Planning, 649 Conkey Street, Hammond, IN 46324.

Computer Applications in Cultural Resources Management

The *CRM Bulletin* will soon have a new feature. Since computers have a significant and growing role in cultural resources management, it seems timely to begin a series of technical articles written by Service professionals dealing with how computers can help us better perform our jobs. The articles will be printed in a pull-out format so that they can be saved in a notebook.

To begin our series, Woody Harrel, interpretative specialist at Jefferson National Expansion Memorial National Historic Site, will explain the development of a fascinating program that will eventually provide biographical data on all participants in the battles whose stories are told at the Service's several Civil War parks. When the data is finally entered, park interpreters will be able to easily answer visitor questions about their ancestors.

Regional Historian Dwight Pitcaithley of the North Atlantic Regional Office will tell how his region expanded and then published the Cultural Resources Bibliography. Anyone involved in professional services contract monitoring will profit from reading Steve Chomko's article. Not only does Steve's program provide a tracking function but also generates all correspondence needed to keep the contract moving to completion. Ever have a superintendent call and ask about the Section 106 compliance in a project that is scheduled to begin tomorrow and you have to tell him that you forgot to monitor the paperwork? Regional Historian Michael Schene of the Rocky Mountain Region will explain how their program prevents these embarrassments as well as reducing the clerical burden of the 106 process.

In other articles, Alicia Weber of the Park Historic Architecture Division, WASO, and Douglas Scott of the Midwest Archeological Center will discuss the List of Classified Structures and the Cultural Sites Inventory, respectively, and how these evaluative inventories have been fashioned into electronic databases that have unlimited potential for cultural resource managers. And there will be more in 1988. We will be looking for new material and encourage you to submit your ideas to the *CRM Bulletin*.

—MGS

CRM 10th

FEEDBACK

Hugh C. Miller

What To Do About Stair Wear

Once the decision has been made that worn historic stair treads cannot be covered with carpet and must be replaced, it may be possible to replace only the worn portion. A solution used by Henry Chambers is described in the illustration. It is accomplished with a bevel saw cut that does not require disassembly of the stair. The replacement tread is fastened to new cleats that make future replacement very easy.

—HCM

Problem: Wood stairs with high traffic volume for which runners or other protection is not appropriate, wear rapidly. To replace worn treads may require disassembly. Some folks only replace the worn area in the middle of the tread.

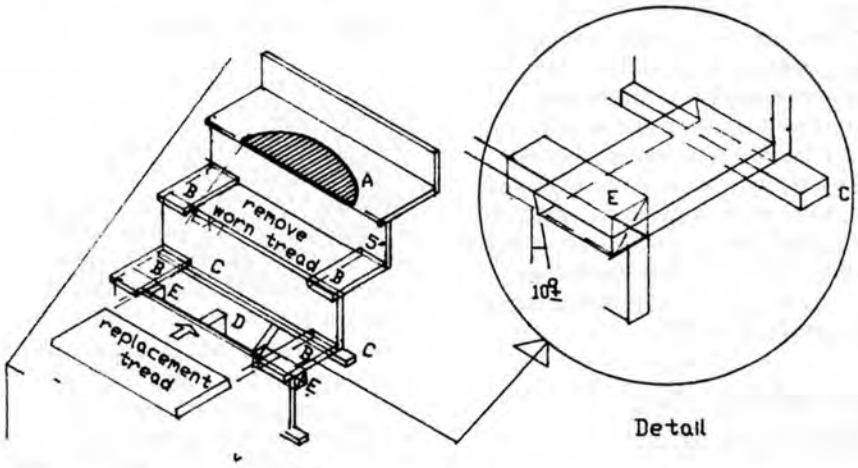

A Worn stair tread
B: Remaining part of existing tread
C New tread support, screw to riser
D Center carriage for tread support
E Blocks to support tread ends

CRM BULLETIN

April 1987

Published bimonthly by the Associate Director, Cultural Resources, in the interest of promoting and maintaining high standards in the preservation and management of cultural resources.

Director: William Penn Mott, Jr.
Associate Director: Jerry L. Rogers
Managing Editor: Ronald M. Greenberg
Production Manager: Karlota M. Koester
Contributing Editor: Michael G. Schene
Feedback Editor: Hugh C. Miller

Cultural Resources, Washington, D.C.

Volume 10: No. 2

U.S. Department of the Interior
National Park Service
Cultural Resources
P.O. Box 37127
Washington, DC 20013-7127

Third Class Mail
Postage & Fees Paid

U.S. Department of the Interior
G-83