CRM BULLETIN

Volume 12: No. 2 Cultural Resources Management • National Park Service 1989
A Technical Bulletin for Parks, Federal Agencies, States, Local Governments, and the Private Sector

A National Register Perspective
Evaluating Historic Mining Resources

Bruce J. Noble, Jr.

Historic mining resources obviously pose certain inherent evaluation problems. Built for temporary use and quickly abandoned once the minerals played out, the resources then fall victim to decades of neglect and abuse aggravated by vandalism and severe weather. Furthermore, the marked level of deterioration which typifies the historic mining scene generally befuddles historic preservationists intent on employing the traditional integrity standards to evaluate eligibility.

This problem is compounded by the fact that we have already identified and documented many of the spectacularly successful mining operations. The exceptional significance of Virginia City, NV, Butte, MT, and Kennecott, AK has been recognized through National Historic Landmark designation and listing in the National Register. Today, we more frequently find ourselves puzzling over the remnants of the more typical historic mining sites. These are the areas

(continued on page 2)

Future editions of the *CRM Bulletin* will periodically include articles prepared by National Register staff members. These articles will discuss the evaluation of particular property types, present overviews of model-quality nominations, outline important eligibility decisions, and generally consider special issues associated with interpreting the National Register criteria. Related articles and suggestions for article topics are welcome.

Black History

Landmarks of Democracy

Harry Butowsky

On the east side of U.S. Business Route 29 in the town of Chatham, Virginia, stands the Pittsylvania County Courthouse, a modest building combining elements of Classical Revival and Italianate styles. The courthouse was built in 1853 and serves as the focal point for most of the civic activities in the town of Chatham. In the restored main floor courtroom, cases are still tried today under the portrait of Judge J.D. Coles, Chatham's most famous citizen. A war memorial dedicated to the Confederate dead of Virginia stands on the north side of the building. Almost six hundred miles away in Topeka, Kansas, at 330 Western Avenue, stands a two-story brick school decorated with stone bas reliefs in the Art Deco Style—The Sumner Elementary School. Every day more than 300 children from Topeka come to the Sumner Elementary School to continue their education. Both the Pittsylvania County Courthouse and the Sumner School continue to serve their respective communities today as they have done for generations. Both of these humble buildings also share another characteristic—they are National Historic Landmarks.

(continued on page 11)

Granier ditch, Atlantic City, WY. Flume work used in the construction of the ditch. By the time this photo was taken in 1903, the ditch had passed from Granier's ownership to the Dexter Mining and Milling Company. Photo by J.E. Stimson, courtesy of the Wyoming State Archives, Museums and Historical Dept.

A National Register Perspective
(continued from page 1)

which have attracted enough attention to imprint the land with the discernible marks of mining activity, yet the financial return was too insignificant to warrant the construction of substantial buildings or structures. Thus, we find ourselves in the difficult position of attempting to evaluate little more than a ditch, a shaft opening, a road, or a collection of prospect pits.

A case recently evaluated by the National Register helps to illustrate these difficulties. The mining district in question is located on Federal land in an isolated mountainous region of Oregon far removed from the state's best known historic mining operations. At the heart of the district is a small mining camp consisting of dormitories, a few small stores, and several miners' cabins. This small area, which contains the only intact buildings and structures to be found in the mining district, was determined eligible for listing in the National Register several years ago.

In the meantime, attention shifted to the larger land area surrounding the parcel of land determined eligible for listing. Although this surrounding area includes no extant buildings, the area does include a labyrinth of paths and roads, numerous shaft openings, a collapsed flume system, and scattered mining equipment. This area clearly includes remnants of mining activity functionally and historically associated with the mining camp. However, our building-oriented approach to assessing integrity provides no framework for evaluating these resources. In addition, because historic context documentation verifies that this is not among the state's more significant mining districts, the district evaluation will have to be based on consideration of its local significance.

Guidelines

Justifying the local significance of an obscure mining operation presents certain complications, but one hopes that significance can be established based on historic context documentation which considers such factors as the influx of miners, and the profitability and productivity of the mining activity. However, our ability to judge the potential significance of this district breaks down when we attempt to use traditional integrity standards to evaluate an area largely devoid of standing structures. Fortunately, two forthcoming National Register bulletins provide a much needed framework for evaluating this type of resource.

National Register Bulletin #30 is entitled "How to Identify, Evaluate, and Register Rural Historic Landscapes." This bulletin defines a rural historic landscape as "a geographical area that has been used, shaped, or modified over time by human activity, occupancy, or intervention, and that possesses a significant concentration, linkage, or continuity of historic buildings, vegetation, roads and waterways, and natural features." A rural historic landscape may or may not contain historic buildings, but a historic landscape will always include tangible imprints upon the land left as the result of historic land use activities. While the bulletin offers a more detailed approach to recognizing and evaluating rural historic landscapes, it is enough to mention here that this bulletin provides a methodology for evaluating mining districts containing a few buildings of questionable integrity and a large area which clearly exhibits landscape impressions left by historic mining activity.

Granier ditch segment located along Rock Creek a few miles upstream from Atlantic City. A rock wall was built to support a flume at a spot where the ditch crossed a steep hillside. Photo by Richard Collier, 1985.

The second forthcoming publication of interest, National Register Bulletin #36, is entitled "Historic Archeological Properties: Guidelines for their Evaluation." This bulletin borrows from archeologist James Deetz the concepts of visibility and focus. Visibility refers to the actual above-ground physical resources, while focus refers to a pattern of impressions in the earth which remain evident even in the absence of visible above-ground resources.

These two concepts can be linked together in four ways which help to evaluate the National Register eligibility of mining sites. First, a site which has both visibility and focus will be eligible. Such a site would consist of a complete mining system including shafts, transportation facilities, extant mill buildings, commercial buildings, worker housing, etc., and all of these resources would be intact and interpretable. Second, a mining site with focus, but no visibility would possibly be eligible. This type of site would lack visible buildings, but, in order to be eligible, would have to contain features such as mines, headframes, tramways, mill sites, tailings piles, house sites, trash dumps, cemeteries, privies and isolated objects which reflect interpretable changes in mining and milling technology and cycles of occupation, and abandonment. Third, a site which had visibility, but no focus would not be eligible. This site would include visible resources altered to the point where their historic appearance had been totally lost and what remained could not be interpreted through historical or archeological methods. Finally, a site which had neither visibility nor focus would obviously not be eligible.

While neither bulletin focuses exclusively on mining issues, both provide guidance in evaluating mining areas where building integrity is lacking. Most importantly, these bulletins advocate a more holistic evaluation process which looks not only at buildings, but also comprehensively considers all the component parts of a complete mining system. Until the National Register issues a mining bulletin which is presently in the early planning stages, both bulletins 30 and 36 provide much needed insight into the evaluation of complex mining resources.

Argo tunnel and mill, Idaho Springs, CO. Photo by Alex Oliszewski, 1977; courtesy of the National Register of Historic Places.

Picture above and the one on page 4 copied from Cecil C. Longridge, "Hydraulic Mining" (London: *The Mining Journal*, 1910; copies provided by the Museum Division of the Wyoming State Archives, Museums and Historical Dept.

Documentation

Having considered some evaluation approaches, we should now consider the mechanics of employing the new National Register forms to document significant mining sites. Many mining sites will occur as components of multiple property groups which will allow them to be nominated on the Multiple Property Documentation Forms. A completed Multiple Property form consists of three elements: a context statement, an analysis of property types associated with the context, and an individual property form to nominate eligible resources. A completed Multiple Property form consisting of a historic context statement and a property type analysis will not actually nominate any properties. Rather, the Multiple Property form will simply provide a framework for evaluating resource significance, while eligible examples of significant property types will be nominated on individual property forms.

Turning to a more concrete example, one possible historic context might be "Borax Mining in Death Valley during the 1880s." This establishes the three fundamental contextual elements: theme (borax mining), time (1880s), and place (Death Valley). The survey process will iden-

(continued on page 4)

Preserving the Patrimony: NIC and its Partners

Ligeia Z. Fontaine

The National Institute for the Conservation of Cultural Property (NIC) is $250,000 richer this year: the real beneficiary of these funds is the Nation's patrimony. The Institute will receive this allocation from the National Park Service (NPS). The funds will cover some of NIC's operating expenses as well as the preparation of a report on the status—and promise—of conservation and preservation in the United States.

The allocation was made possible by the House Interior Appropriations Subcommittee, under the leadership of Congressman Sidney Yates (D-IL). In effect, the subcommittee recognized NIC's comprehensive perspective (the Institute looks at all aspects of the Nation's heritage) as well as the potential for partnerships between NIC and government agencies. Furthermore, the Congressional allocation will be partially matched by operating support grants from the Bay Foundation, the J. Paul Getty Trust, and the A.W. Mellon Foundation.

Despite its success with Congress, governmental agencies, and foundations, NIC is not yet a household word. What, then, is NIC and what does it do?

What is NIC?

The National Institute for the Conservation of Cultural Property is a

A National Register Perspective
(continued from page 3)

tify a variety of extant property types associated with this context. These property types might include mill sites, underground borate mines, mining camps, tramways, and so on. If all these resources exist in close proximity to one another, then the property type will qualify as a historic district. If property types occur in relative isolation (a remote underground mine site, for example), the property type will focus on the characteristics of that individual resource. The Multiple Property Documentation Form would include a written historic narrative discussing Borax Mining in Death Valley during the 1880s and a description of the property types related to that context. Whether a property type defines a district or an individual resource, an individual National Register form would be used to nominate eligible examples of that property type.

The National Register advocates comprehensive surveys oriented around a theme which will identify eligible resources within a given geographic area and ultimately result in the completion of a multiple property nomination. However, in somes cases, limitations on time and money will prevent us from engaging in such comprehensive projects. In these cases, individual National Register forms can be used to nominate a single mining resource or district to the National Register. It is important to remember that even though a mining district may consist of a multitude of features, these districts will still be documented on an individual National Register form.

In conclusion, the need to evaluate mining resources as complete systems is worth stressing once again. Frequently at the National Register we are asked to determine the eligibility of, for example, a sluice ditch or an individual tailings pile because of pending actions which may impact these resources. However, when removed from a larger interpretive context, it becomes difficult, if not impossible, to assess the significance of an individual ditch or tailings pile. Fortunately, National Register Bulletins 30 and 36 and the new multiple property nomination format act to provide a framework for evaluating mining resources on a holistic and understandable basis.

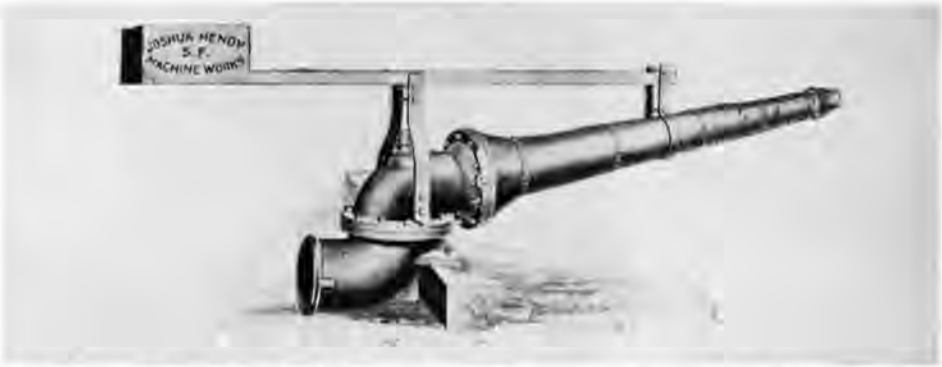

Emile Granier reportedly intended to use hydraulic mining equipment manufactured by the Joshua Hendy company of San Francisco, CA. It is possible that a hydraulic giant similar to the one in this picture was used in the Granier ditch project.

Bruce Noble is a historian in the National Register of Historic Places, National Park Service, Washington Office.

not-for-profit, national organization that promotes the care of America's collections, both public and private. It has been in existence since 1972. Based in Washington, DC, NIC is housed in the Victorian Arts and Industries Building on the National Mall. (The Smithsonian Institution provides this space and other services.) NIC has a broad-based membership of individuals and institutions. This membership devotes its energies to conservation and preservation.

NIC seeks to heighten public awareness about the importance of cultural resources. It complements this activity with programs to assist museums, libraries, archives, historic sites, and any other organizations that have day-to-day responsibilities for preserving the Nation's heritage. NIC also serves as an information clearinghouse and a forum for the experts—museum and library directors, heads of historic preservation groups, conservators, preservation architects and other specialists who have a professional interest in conservation.

Statue before preservation.

Statue after preservation.

Photos by Nicolas F. Veloz, National Park Service.

Diversity of NIC

The Institute draws on the expertise of its members to accomplish its goals. A glance at the NIC directory reveals this membership's remarkable diversity: educational institutions, laboratories and conservation facilities, professional groups, museums, libraries, archives, private businesses, foundations, and government agencies have all joined NIC. Moreover, the disciplines represented are varied: natural history, history, fine and decorative arts, architecture and historic preservation, ethnography and archeology, and the archival and library sciences.

Lawrence L. Reger, the Institute's president, believes that his organization is the most inclusive of the groups currently promoting preservation and conservation. The depth and variety of the members' interests assure many viewpoints. "We want to protect every kind of collection, from beetles to bronzes to buildings," says Reger. "And we know that caring for these collections involves many different kinds of expertise." Reger adds that he is "convinced that the survival of an object or a building is not only a question of restoring a canvas or repointing bricks; before that can be done we have to communicate the *need* for care to the owner of those collections or buildings."

Reger points out that the Institute enlists the support of both the public at large and the decision makers. Moreover, NIC is aware of the importance of business and industry to conservation. "For example, if we can help the paper industry produce permanent and durable paper, we will feel that we've done a great thing for the researchers—and librarians—of the future." (One of NIC's goals is to eliminate the "brittle paper" problem through preventive measures.)

NIC boasts among its members many governmental agencies—Federal and state—that make policy, fund programs, or administer programs of their own. (A sample of these includes the National Archives, the Architect of the Capitol, the New York State Office of Parks, and the National Park Service.) NIC promotes cooperation between governmental and non-governmental entities, thereby ensuring better communication and more efficient use of resources.

Professional conservators are a driving force in NIC, but the organization does not see itself as a "professional association." Whereas, for example, the Association for Preservation Technology represents professions, and the Association of Research Libraries represents institutions, NIC sees itself as representing the artifacts and objects, the books and the documents, the specimens, the buildings and the sites, that make up the Nation's patrimony. NIC's objective is to come up with strategies to maintain the integrity of this heritage. A number of programs serve this over-arching goal.

Save Outdoor Sculpture!

One NIC program (which NPS helps sponsor) is Save Outdoor Sculpture! (SOS!) Reger points out that "outdoor sculpture is the 'orphan' of the art world. Yet, outdoor sculpture contributes greatly to the character of our public space. And because outdoor sculpture so often commemorates important events in our history, it is part of our national identity."

(continued on page 6)

Preserving the Patrimony
(continued from page 5)

NIC plans to enlist volunteers to perform inventories of their local outdoor sculpture. (Many such sculptures are on NPS-adminstered land.) The volunteers will fill out condition assessment forms developed by the NIC planning committee, on which NPS served. The condition assessments of the outdoor sculpture will provide an empirical base for making decisions about the long-term care of the sculpture. The information will also contribute to the Park Service's understanding of the impact of environmental pollutants—such as auto emissions and acid rain—on outdoor sculpture.

SOS! is a component of the national inventory of sculpture conducted by the National Museum of American Art (NMAA). This monumental task will take several years to complete and has an estimated price tag of 3.2 million dollars, currently being raised by NMAA and NIC. Reger points out that this is "not very costly, especially when compared to the aesthetic and economic value of the sculpture . . . but it's still a challenge to raise."

Where Are We?
Where Are We Going?

The Institute's congressional appropriation will also help NIC prepare a report "on the progress that has been made to further a national strategy for the care of our Nation's patrimony and to provide recommendations for future actions to advance this goal." (These words appear in the congressional report that accompanies the appropriations bill.)

The report will try to define what we as a Nation have achieved in the fields of conservation and preservation, and to provide a blueprint for the future. The report is expected to further increase public awareness and to spell out the principles that should inform a national strategy. To carry out this congressional mandate, NIC will solicit opinions, conduct interviews, perform a literature search, and gather—and analyze—data.

The approach to the NIC report on the Nation's patrimony will be to reconcile professional and public concerns, and to let the differing perspectives illuminate what NIC discovers. This approach characterizes many of the Institute's efforts. For example, NIC, working with the President's Committee on the Arts and the Humanities, sponsors the *Invest in the American Collection* forums. The first of these took place last year in Chicago; the second in Los Angeles in February 1989. (The keynote speaker was Giovanni Agnelli, the chairman of Fiat S.P.A., Italy.) The purpose of such forums is to bring together business leaders, foundation executives, trustees, and patrons of institutions and interest them in preservation and conservation. The forums are an opportunity to expose nonspecialists—who may have an influence on the future—to such vital issues as the environment's effect on cultural property and the impact of natural and man-made disasters.

In addition to raising public awareness and enlisting support, NIC has a long-standing commitment to improved care for collections. In recent years, NIC has helped to promote (with the generous help of the Bay Foundation) a series of pilot training programs. Four museums, representing different disciplines, have developed prototype curricula for the training of museum workers in the care and maintenance of collections. The museums are the Arizona State Museum (archeology and ethnography), the Art Institute of Chicago (fine arts), the Los Angeles County Museum of Natural History (natural history and sciences) and the Panhandle Plains Museum (history). The model curricula will be published in 1989.

The Institute is also engaged in several other projects that will raise the level of collections care in museums. NIC is working closely with the Getty Conservation Institute to develop a "user friendly" method of assessing the conservation and preservation needs of collections. The documents under development include survey forms, an explanation of how to do an assessment, a bibliography, and guidelines on how to prepare a useful report.

Of particular interest are the recommendations and forms for collections that are housed in historic buildings. The new assessment instrument recognizes that under these circumstances equal priority must be given to the items and the building. It is expected that the forms will help define (and perhaps resolve) some of the hard decisions that have to be made when competition exists between maintaining the integrity of the architectural structure and the needs of the collection.

Ultimately, NIC—with the support of the Institute for Museum Services (IMS)—hopes to begin a conservation assessment program (CAP) of its own: CAP will bring specialists as visiting consultants to museums, historic sites, and other collection areas on a noncompetitive, subsidized basis.

These are not all of the Institute's programs, but they are among the major ones and they exemplify the thrust of this growing organization. With the help that the Institute is getting from foundations and other private sources, as well as government agencies—NIC is receiving funding not only through NPS, but through a cooperative agreement with IMS—the organization should continue to thrive. NIC is a force in identifying and addressing the issues surrounding the conservation and preservation of national collections and historic sites. Its formula for success, which enlists the private and the public sector, the professional and the lay audiences, holds much promise for the continuing care of collections.

Ligeia Fontaine is a Washington writer, editor and consultant who specializes in cultural resources. She is the former editor of *Museum News* and the *Welfare Management Institute Exchange*.

Managing Change in a Cultural Landscape

Carey Feierabend

Buffalo National River, located in the northwest corner of Arkansas, was established in 1972 to conserve and interpret the area's natural resources. The Boxley Valley, located along the upper Buffalo River, is an Ozark Mountains rural historic landscape that has evolved and yet maintained historic integrity over the last 150 years. The valley is representative of the traditional Ozark Mountains valley settlement patterns from the early 1800s, with significant vernacular landscape and architectural features, as well as pre-historic resources. In the early 1980s, the Boxley Valley was designated as a rural historic landscape and listed in the National Register of Historic Places.

The valley has become a testing ground for management strategies. With the establishment of the National River, the majority of farms was acquired by fee, and vacated during the late 1970s. As a result, bitterness grew between the local community and the Service; with abandonment, the valley rapidly began to lose its historic integrity. The Service decided to develop a management/preservation plan to address several questions: How might the responsibility for preservation be shifted from the NPS to the private sector? How can these agricultural properties be economically viable, and attractive to prospective buyers, yet retain historical integrity? What strategies can be used to develop a stronger "pride of place" for the local community with a Park Service presence? How much change is too much?

Plan

An innovative Land Use Plan/Cultural Landscape Report (CLP) was prepared by the Denver Service Center in 1985, which recently won a Presidential Design Award. Developed as a resource management model for rural historic landscapes, the plan advocates a policy of continuum or "managed change," while protecting the natural and historic values of the valley. As stated in the CLP, "The Park Service will direct change, not stop it or ignore it. This should allow for a moderate degree of landscape evolution over time while significant tangible and intangible cultural resources are preserved." In order to achieve this and to shift the burden of preservation to the private sector, the land use plan provides a framework to administer the sell-backs and lease-backs of the historic properties.

Four years after the CLP's inception, however, there are concerns about its implementation. There are complex issues within the Boxley Valley that continue to require the development of specific management tools to further define and successfully implement the plan's overall objectives. One of the fundamental challenges is the policy of continuum. In essence, any action is a change. In the Boxley Valley, these range from simple neglect, to new use and construction. Hence, to properly assess the potential impact of any change, a proposal must be evaluated for its effects upon the existing individual features and potential archeological resources; the particular land tract; and the overall valley. A proposed change must also be assessed with respect to past changes, as well as future ones, maintaining a clear understanding of the effects of incremental changes over time. In order to do this, a framework is needed for evaluation, and a common ground for communication understood.

Guidelines

One tool presently being developed as a means to resolve questions of appropriate "managed change," especially for new construction, is a set of visual compatibility guidelines. Although the Boxley Valley land use plan set forth some guidance for new construction, in actuality, determinations are needed on a case-by-case basis. The criteria for approving or disapproving a proposal for new construction is based upon its impact on the identified character-defining features of a particular land tract, as well as any proposed mitigation for negative effects, through a compatibility test.

Visual compatibility guidelines for the Boxley Valley will follow from the overall parameters set forth in the land use plan by highlighting the significant features of the valley as a cultural landscape. The guidelines must establish a framework for evaluating changes; in particular, their effects at many levels. The guidelines must be flexible enough to permit changes characteristic of the valley in the future, yet promote the continuum of a valley as a significant cultural landscape.

Visual compatibility guidelines for the Boxley Valley are intended for three different audiences, each with a specific need. These are park managers, the local community, and visitors. For the managers, the guidelines will act as a tool to implement the land use plan more effectively. They will be a supplement to each land exchange agreement, and be a vehicle for evaluating proposed new construction for compatibility and assessment of effects.

For the local community, visual compatibility guidelines serve several purposes. These guidelines are intended to play upon a "pride of place" identifying specific, existing elements that make the valley a special place, and that constitute historic integrity. They also increase the awareness of the intangible element of cultural

(continued on page 8)

Managing Change
(continued from page 7)

heritage. A reminder of the valley's local and regional context in light of proposed changes may be helpful for developing specific preservation strategies. In general, the guidelines will promote a better understanding of what features need to be preserved and how changes can best be integrated into the valley without loss of historic integrity.

Communication

Education or interpretation is the focus for the park visitor. It is critical to create a greater awareness of the valley as a significant cultural landscape, and define what this entails, using the visual compatibility guidelines. Perhaps when these visitors return home, they will have gained a new perspective of cultural, historic and natural features.

In formatting the guidelines for all of these audiences, there are several points that must be emphasized. First, these guidelines will draw upon existing elements as examples of significant features in the valley that are to be maintained and encouraged. Typical components of the built environment to be illustrated are: land use and circulation patterns, vegetation types and applications, cluster arrangements, building orientation, structural types, scale, textures, massing of structures, and fencing techniques. Hopefully, these illustrations will be neither overwhelming nor intimidating. The primary reason for using existing conditions is to promote the "pride of place," so that the local audience has something with which to identify.

Secondly, the graphics are the primary means of communication. Largely intended as a visual interpretation of the often complex land exchange jargon, the guidelines will consist primarily of sketches and photographs, establishing general standards for compatible new construction to both existing structures and sites. As each individual interprets the deed language with a personal orientation, graphics act as a more objective means for depicting intentions.

To be positive and avoid a tone of "do's and don'ts," the guidelines will not illustrate specific alternatives for new construction. Instead, they will highlight the threat of detrimental cumulative effects, and how incremental changes over a period of time can dramatically alter the landscape. As an example, farming technology has evolved since the construction era of the historic structures in the Boxley Valley. The typical hay bale has changed over time and as a result, storage requirements of barns must accommodate this change. Hence, steel frame barns, rather than traditional wood pole-frame structures, are a popular new construction technology being proposed by owners and lessees. These structure types are a change in scale, massing, and texture from the historic structures. Technological change is effecting an architectural change, and the Service must be flexible to accommodate this need. For instance, one alternative may be to use a steel frame for the structure, but clad it in a non-reflective material. Siting and vegetative screening may be other forms of mitigation.

In conclusion, visual compatibility guidelines are one management tool being developed to better address a specific issue in the Boxley Valley. Other issues related to the clarification of "managed change" have come up since the plan's creation. These include the need for a resource inventory update, to re-evaluate significance levels assigned during the initial inventory as well as to identify recently discovered resources and document lost ones; the need for identifying significant, character-defining elements per land tract before its transfer to private hands; the need to establish preservation priorities within the valley, as well as park-wide; and the need to better guide and understand the impact of new construction and other changes in the valley.

The issues are obviously complex and not readily resolved between the varying parties. However, with the continued input from both the Boxley Valley community and multi-disciplined professionals, the policy of "managed change" within a cultural landscape will continue to evolve, and hopefully establish new, model management tools applicable to other park units.

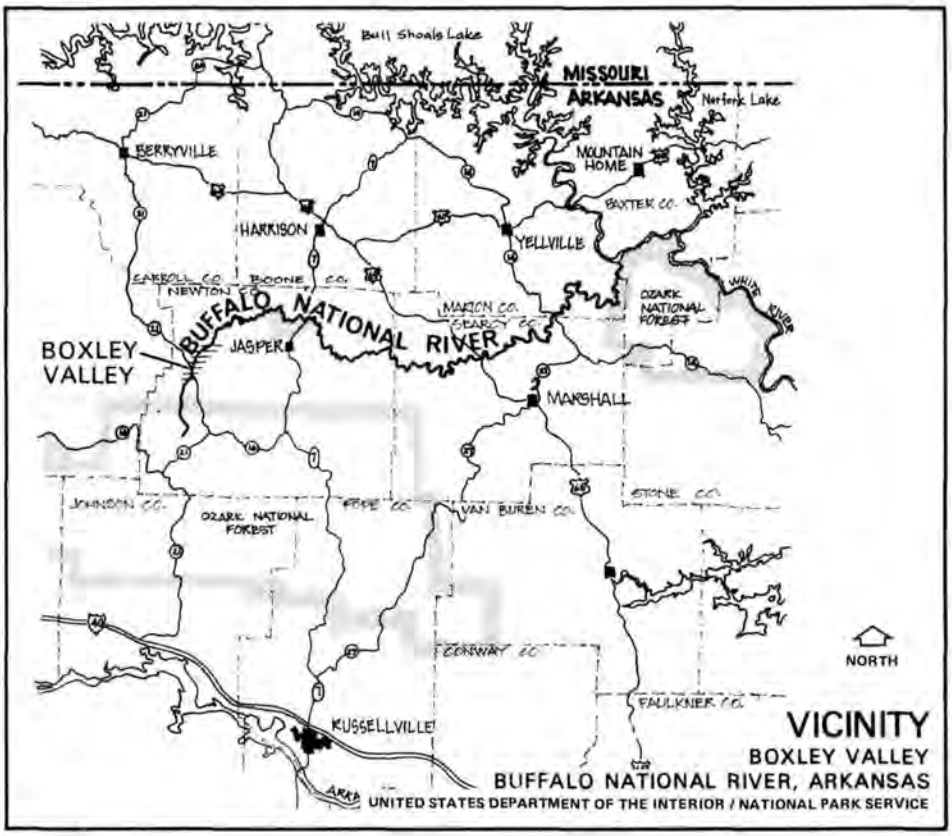

Carey Feierabend is a historical architect in the Southwest Regional Office, National Park Service.

Dogwatch

James P. Delgado

"Dogwatch" is the term traditionally used for the two-hour watch during which half the ship's crew eats supper and swaps stories.

International Cooperation in Maritime Archeology

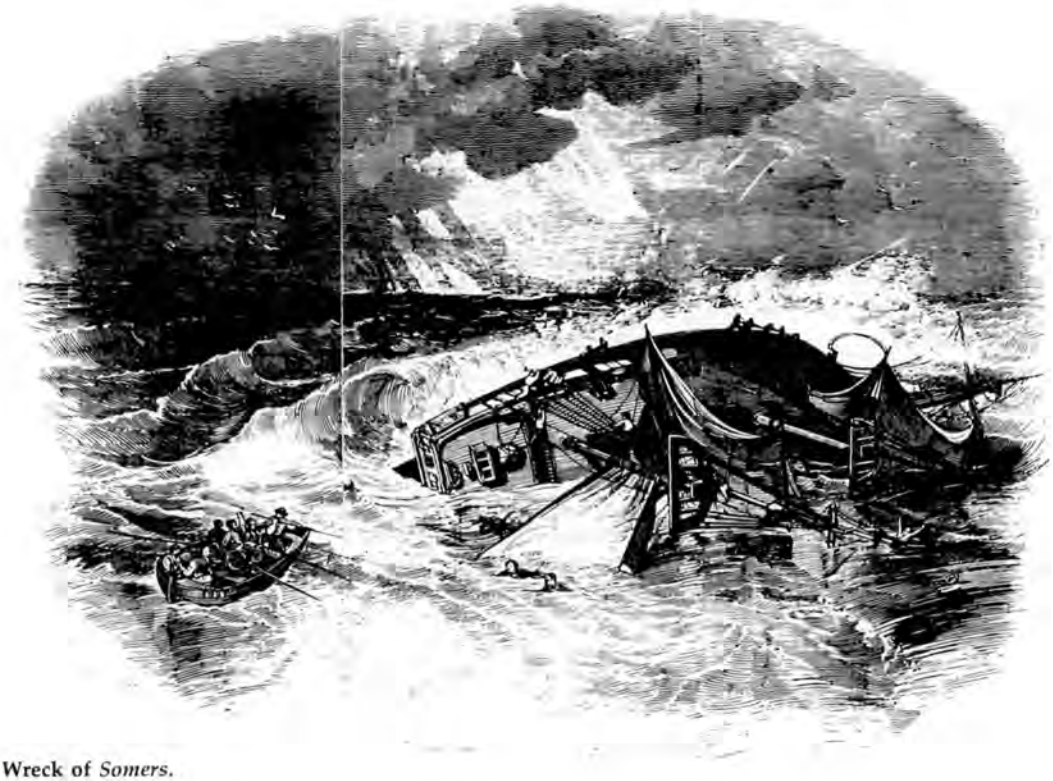

Wreck of *Somers*.

During the active life of most historic vessels, they transited the international waters of the globe, calling at ports around the world as they engaged in trade, recreation, and naval activities. They might have been built and registered in the United States, Great Britain, France, or another nation, but the majority of their careers were not necessarily spent in their homeport or the country of their origin unless they were coastal or riverine traders; even the boats on four of the five Great Lakes crossed an international boundary.

Because ships were designed and operated as moving structures, there are historic vessels of exceptional national significance to the United States which remain afloat in other countries, and there are vessels important to other nation's history that are preserved in the United States. There are also shipwrecks of exceptional national historical and archeological significance which lie in international waters or within the territorial waters of foreign governments. Simply because these resources do not lie in the waters of the nation to which they are important does not mean efforts to preserve and study them should not be made. In many cases the international character of many of these ships strengthens their significance, as a vessel may have attained significance in nations other than that of her construction and registry.

The NPS has worked with the U.S. Department of State and others to ensure protection and study of wrecks significant to U.S. history both in international and foreign waters while extending that privilege to nations whose wrecks lie in U.S. waters, notably in national parks. To that end a new policy on the international nature of historic maritime resources was approved in May 1988 by the Director of the National Park Service. The NPS will offer its expertise in submerged cultural resource management and maritime preservation through the International Affairs Division, invite foreign scholars to work on shipwrecks and maritime properties in the national parks, inventory significant ships and shipwrecks of importance to U.S. history that are abroad, and work closely with the Department of State to provide expertise in the assessment of significance, potential impacts, and recommendation of appropriate preservation approach for State Department consideration in negotiating with foreign governments on historic shipwreck matters.

(continued on page 10)

International Cooperation
(continued from page 9)

The NPS is currently working on two specific shipwreck projects with the State Department. These are negotiations on the subject of the wrecks of USS *Somers* and CSS *Alabama*. USS *Somers* (1842-1846) was a vessel of considerable historical significance to the U.S. Navy and the social history of the U.S., largely due to an infamous suppression of mutiny aboard the ship through the execution of three crewmembers, including the son of Secretary of War John Canfield Spencer. The event inspired a tremendous controversy involving the government and private figures including James Fennimore Cooper, Richard Henry Dana, and Herman Melville, who wrote *Billy Budd* in response to the *Somers* saga. Lost on December 8, 1846, while blockading Veracruz, Mexico, during the war with that nation, the vessel's archeologically pristine remains were rediscovered and identified by a private group of American citizens in 1986 and 1987. Since then, Mexican nationals have discovered the wreck and have commenced plundering this fragile archeological site and war grave. The U.S. Department of State, U.S. Navy, and the National Park Service are working together to develop a cooperative agreement with the Mexican Government to ensure protection and scientific study of the wreck.

CSS *Alabama* (1863-1864), a commissioned warship of the Confederate States of America, was the most successful commerce raider in the history of the world. Built at Birkenhead, Great Britain for the Confederate government under a ruse to confound British neutrality laws, *Alabama* was commissioned and commanded by Raphael Semmes, a famous U.S. naval officer whose previous commands included the brig *Somers* when she was lost at Veracruz, and the Confederate commerce raider *Sumter*. Later an Admiral in the Confederate Navy, Semmes gained international notoriety during his successful cruise in command of *Alabama*. Confederate raiders destroyed a large number of American ships and succeeded in driving many American-flag vessels from the high seas during the Civil War, a blow from which the United States merchant marine never recovered. Sunk in combat with the United States warship *Kearsarge* off Cherbourg, France on June 19, 1864, *Alablama* plunged to the bottom of the English Channel with injured and trapped members of her crew. Semmes and others were rescued and escaped capture; some of his officers and crew were not as lucky and were captured by the victorious *Kearsarge*. The wreck of *Alabama* was discovered in 220 feet of water by a French expedition in 1986. Now in French territorial waters, the site has been surveyed and some artifacts, including the brass binding from the ship's wheel with *Alabama*'s motto engraved upon it, have been recovered. The U.S. Government considers *Alabama* American property and the State Department, working with the NPS, NOAA, the U.S. Navy, and various U.S. interest groups, is concluding diplomatic discussions with an eye for a cooperative agreement with France and Great Britain to insure careful archeological study, interpretation, and return of *Alabama* artifacts to the U.S. for public display.

Jim Delgado is the Maritime Historian of the National Park Service.

Archeological Protection Efforts

Tom Des Jean

The Big South Fork National River and Recreation Area (BISO) is located in Tennessee and Kentucky, encompassing 103,000 acres, with an additional 12,000 acres to be acquired. Within the Federal boundary there are thousands of prehistoric rockshelter sites. The Southeast Archeological Center of the National Park Service, with funding from the U.S. Army Corps of Engineers, developed a monitoring program for BISO to acquire information for effective cultural resources management which could also be used as a model for other NPS units in the southeast. One further aim was to identify sites most vulnerable to looting and vandalism, especially since there is a "folk tradition" of digging for Indian relics on the Upper Cumberland Plateau.

The BISO law enforcement division has been concerned for some years with discouraging looting and vandalism of cultural resources. Following numerous unsuccessful attempts at enforcing the law (due primarily to limited available staff) and discussions with other Federal agencies (USFS, Border Patrol), a strategy for electronic surveillance was developed. Additionally, development of this strategy represented an application of information provided through the Federal Law Enforcement Training Center's 40-hour training course on archeological protection.

A number of remote sensing instruments were purchased. These instruments included seismic detectors and ferrous metal detectors. In both detectors sensors transmit a radio alarm when triggered and automatically reset themselves after a ten-minute interval. Consultation and cooperation with the monitoring program archeologist led to the installation of the remote sensing devices at vulnerable rockshelters during the season they were most likely to be vandalized. Some problems were encountered during installation which were solved by camouflage techniques. Others were more difficult, such as frequent thunderstorms which triggered alarms and forced BISO rangers to check the various locations in foul weather, in daylight and at night.

These dry runs did pay off, though, when early Thursday morning, December 22, 1988, rangers responded to a magnatometer radio alarm at a Kentucky site and discovered four individuals digging in a rockshelter. Damage to the site was analyzed and determined to be above the felony threshold. The individuals were charged under the Archaeological Resources Protection Act and digging tools (picks, shovels, and screen), artifacts, and a vehicle were seized.

Tom Des Jean is an archeologist with the Southeast Archeological Center in Tallahassee, FL.

Landmarks of Democracy

(continued from page 1)

The education of the American public concerning the history of the United States and the evolution of our democratic values is borne to a large extent by the preservation and recognition of historic sites such as the Pittsylvania County Courthouse and the Sumner Elementary School. Preserved historic sites, including National Historic Landmarks, teach us about our past. They commemorate and illustrate our history and culture and add to our knowledge of the past in a way that no textbook can duplicate.

Historic sites have the ability, if correctly interpreted, to speak directly to the modern visitor about the burning issues and passions of the past and convey a sense and understanding of our history not available from any other source. An examination of the history of the evolution of American democratic values and freedoms illustrates this point.

The Constitution

When the Constitution of the United States was drafted in 1787, it was hailed as a magnificent forward step which would guarantee the freedom and stability of the newly founded United States of America. Implied in the document was the belief that the purpose of government was to protect and defend the natural rights of all men—the rights of life, liberty, and the pursuit of happiness. Furthermore, the power of government was derived from the *people* who had the right to change, alter, and even abolish that government. The drafters of the Constitution recognized that not all problems could be solved or even anticipated in 1787, but what was important was the establishment of a process by which the sovereign will of the people could be expressed over the years through the evolution of constitutional doctrine. Still there were many groups of Americans—including blacks, women, Indians, and other minorities—who did not share in its guarantees. Slavery, for example, was condoned in the Constitution, and the African slave trade was permitted to continue until 1808. No mention or thought was given to insuring that minority Americans were given full citizenship rights including the right to vote and hold elective office.

The evolution of the Constitution, as foreseen by our Founding Fathers, took place many times in American history and most importantly in the years after the Civil War, when reform-minded Americans sought to extend to the newly freed slaves the same measure of equality and opportunity that white Americans enjoyed. Through its control of the Congress, the Republican Party initiated programs designed to accomplish these ends and provide the newly freed slaves the guarantees of full civil rights.

Civil Rights Laws

In 1865 and 1866, Congress founded the Freedman's Bureau to feed, clothe, and protect the ex-slaves and passed civil rights acts to outlaw varied forms of discrimination. In addition, Congress passed the 13th amendment (1865) outlawing slavery, the 14th amendment (1868) extending Federal citizenship to blacks, and the 15th amendment (1870) protecting the right to vote for black men. Congress backed up these efforts with the passage of a more comprehensive Civil Rights Act in 1875. While it was possible to pass civil rights laws and even to change the Constitution, it was more difficult to change the attitudes of white Americans toward their newly freed and enfranchised black neighbors. In the years after 1875, the tide of events began to run against the effort to secure full civil equality for the ex-slaves. In state after state in the South, the white leadership of the Democratic Party regained control of the political machinery, and through a gradual process, combining repressive legislation and intimidation, eliminated black participation in the political process and instituted a policy of racial segregation. The national Republican Party which had previously supported the extension of full civil rights for black Americans acquiesced in this process. In discussing the events of these years many history textbooks paint a dismal picture where white Americans, both North and South, are reconciled at the expense of black Americans, with the approval of officials at all levels and in all branches of government. While this interpretation of the state of race relations after the Civil War is not incorrect, it omits an important part of the history of this period.

Many Americans after the Civil War believed that the 14th amendment to the Constitution fully intended that the Bill of Rights should limit the power of the individual states as well as that of the Federal Government. Only the Federal Government, acting under the authority of the 14th amendment and the various civil rights acts, could guarantee the full civil and political equality of the ex-slaves. The significance of the 14th amendment, according to this interpretation, was that it nationalized civil rights and limited the powers of the states, which would continue to be the principal regulators of personal liberty and civil rights but would now do so under the supervision of the Federal Government.

Court Challenges by Black Americans

After 1875, black Americans maintained a steady counter-offensive through the courts on the system of segregation that denied them their basic civil rights and the guarantees of life, liberty and pursuit of happiness, as enjoyed by other Americans. In case after case to come before the Federal courts, discriminatory laws and narrow interpretations that limited basic civil rights were challenged. Having been abandoned by the legislative and executive branches of the Federal Government, black Americans sought help in the Federal court system and mounted a long campaign lasting into the next century to secure the equality promised to them in the Constitution. While white Americans may have dropped their commitment to full

(continued on page 12)

Landmarks of Democracy
(continued from page 11)

civil rights, black Americans did not forget the promises made to them in the 14th and 15th amendments to the Constitution and waged a long campaign to achieve their full civil rights. The sites of many of these civil rights cases no longer survive. The East Louisiana Railway Station in New Orleans, where Homer Plessy was arrested for violating the segregation laws of Louisiana and whose appeal to the Supreme Court became known as *Plessy* v. *Ferguson* (1896), is gone. Also gone is Mr. Justice John Marshall Harlan's house in Washington DC—where he penned his stinging dissent to the majority opinion of the Supreme Court in the *Plessy* decision stating, "Our Constitution is colorblind, and neither knows nor tolerates classes among citizens. In respect to civil rights, all citizens are equal before the law." The Nichols House in Jefferson City, Missouri, the Grand Opera House in New York, Maguires Theater in San Francisco—sites of court challenges to various state segregation laws in the *Civil Rights Cases* (1883)—have not survived the passage of time.

Judge Coles' Courtroom

One of the sites that has survived the test of time is the Pittsylvania County Courthouse in Chatham, Virginia, a property associated with the case of *Ex parte Virginia* (1880). The events leading up to this case started in 1878 when Judge J.D. Coles, sitting in the Pittsylvania County Courthouse, in Chatham, Virginia, tried to prevent the black citizens of his community from serving on grand juries—a clear violation of the 14th amendment. The black citizens of Pittsylvania County Virginia decided to fight Judge Coles. They filed a complaint with Federal authorities and had Coles arrested and charged with a violation of the Civil Rights Act of 1875. In the resolution of this case, the issue of the denial of the rights of black Americans to sit on juries eventually reached the Supreme Court of the

Pittsylvania County Courthouse, main courtroom. Photo by Marvin B. Scruggs, 1986.

Pittsylvania County Courthouse and Confederate War Memorial. Photo by Marvin B. Scruggs, 1986.

Sumner Elementary School. Photo by Topeka Board of Education.

United States. In finding for the black citizens of Pittsylvania County, Virginia, the court gave black Americans one of their few victories in the Federal courts in the generation after 1865, since the issue involved the clear attempt by a state official in Virginia to deny citizens within his jurisdiction the equal protection of the laws. *Ex parte Virginia* clearly illustrated the fact that the 14th and 15th amendments, after all, had resulted in the extension of national power behind the personal liberty and civil rights of Americans. While the states retained their primary responsibility and power to regulate civil rights they were no longer autonomous. *Ex parte Virginia* showed that the Federal Government now had a qualified but potentially effective power to protect the rights of American citizens. The black citizens of Pittsylvania County, in their refusal to accept the denial of their civil rights, forced the court and American society to recognize the changes wrought by the 14th amendment to the Constitution. With their successful prosecution of their complaint against Judge Coles, they clearly demonstrated that the achievement of civil rights for all Americans did not require a change in the Constitution as much as the fulfillment of the original intention of the framers of the 14th, and 15th amendments to the Constitution. *Ex parte Virginia* represented the promise of the future.

Plessy v. Ferguson

At the center of the struggle for equal civil rights was the case of *Plessy v. Ferguson* (1896), in which the Supreme Court established the doctrine of separate but equal in the use of public facilities. The segregation of the races was regarded as valid if the facilities were equal since it is the "equal" protection of the laws that is guaranteed by the 14th amendment. At first, the Supreme Court was extremely lenient in construing what this "equality" required when it held in *Cummings v. County Board of Education* (1899) that there was no

(continued on page 14)

Warren Court. In 1954, during his first year as Chief Justice, Earl Warren and the other members of the Supreme Court, shown above, were called upon to decide the case of *Brown v. Board of Education of Topeka*.

Landmarks of Democracy
(continued from page 13)

denial of "equal" protection of the laws in the failure of a southern county to provide a high school for black children, although it maintained a high school for white children. The Court was satisfied with the county's defense that it could not afford to build a high school for black children. In other cases dealing with segregation issues which reached the Supreme Court after *Plessy*, the doctrine of "separate but equal" was followed and not seriously reexamined for almost 60 years.

In the early years of the 20th century, the Supreme Court, applying increasingly more rigid standards of equality, began to find that black plaintiffs were being denied equality of treatment. In case after case, the court applied the "separate but equal" standard declared in *Plessy* in an increasingly demanding manner.

Brown v. Board of Education of Topeka

In 1951, the Sumner Elementary School in Topeka, Kansas, was an all-white school that Linda Brown walked past every day to get to the all-black Monroe Elementary School, several blocks away. Linda Brown's father, the Reverend Oliver Brown, joined 12 other black parents and filed a lawsuit against the Board of Education of Topeka, Kansas, challenging the constitutionality of racial segregation in the Topeka public schools.

This case, known as *Brown v. Board of Education of Topeka*, showed that both the black and white schools of Topeka were as equal with respect to buildings, salaries, teachers, and other tangible factors as could be expected. The issue that Reverend Brown challenged in the Court was the constitutionality of segregation *per se* as originally affirmed in *Plessy v. Ferguson*. The legal basis for this challenge was the 14th amendment of the Constitution.

The Decision

On May 17, 1954, just 35 years ago, the Court issued its historic decision in which it concluded that "Separate educational facilities are inherently unequal." This decision, written by Chief Justice Earl Warren, was unanimous with only a single opinion of the Court. The issue of the legal separation of the races was settled. Segregation was a violation of the 14th amendment of the Constitution and was unconstitutional. The social and ideological impact of the case can not be overestimated. After 60 years, *Plessy v. Ferguson* was overturned.

The Sumner Elementary School to which Linda Brown was originally denied access in 1951 symbolizes both the harsh reality of discrimination permitted by the *Plessy* decision and after 1954 the promise of equality embodied in the 14th amendment of the Constitution—a promise recognized by the Reverend Oliver Brown and the other black parents of Topeka, Kansas when they filed their lawsuit.

Both the Pittsylvania County Courthouse and the Sumner Elementary School stand as monuments to generations of black Americans who refused to accept the denial of their basic civil rights. The recognition of these sites as National Historic Landmarks and their interpretation to the American public reminds us of this history and provides a physical link to our immediate past in a way that no textbook can convey. They are the symbols of the very constitutional principles upon which this Nation was founded and serve as guideposts reminding us of the greatness of our Constitution and the need to be ever vigilant in the preservation of our liberties. They remind us of the price previous generations of Americans have paid to secure for all of us the rights guaranteed by our Constitution. They are National Historic Landmarks that help us to remember.

Harry Butowsky is a historian in the History Division, National Park Service, Washington Office. For further reading on this subject, please see "Landmarks of Democracy," *CRM Bulletin Volume 10, No. 2, April 1987.*

Portraits

Pages 1, 14

Thurgood Marshall, Associate Justice of the Supreme Court, 1967-, while a young lawyer for the National Association for the Advancement of Colored People (NAACP), argued the case of *Brown v. Board of Education of Topeka* (1954) before the Supreme Court.

Page 11

John Marshall Harlan, Associate Justice of the Supreme Court, 1877-1911, in the case of *Plessy v. Ferguson*, (1896) dissented from the majority opinion of the court and stated that our "Constitution is color-blind, and neither knows nor tolerates classes among citizens." Harlan's famous dissent would give hope to later generations of Americans in the fight to overturn *Plessy*.

Pages 12, 13

Earl Warren, Chief Justice of the United States, 1953-1969, wrote the unanimous opinion of the Court in the case of *Brown v. Board of Education of Topeka*, (1954), which held that segregation of the races was a violation of the Fourteenth Amendment of the Constitution and was unconstitutional.

How to Restore Stone

Methods of cleaning, pointing, repairing, treating, patching, replacing and sealing architectural stone.

Norman R. Weiss

More architects, engineers, construction managers, stone suppliers and setters, and waterproofing contractors are involved in restoration projects than ever before. These diverse members of the construction industry share a common goal: the preservation and correction of the effects of weather and human use. A fuller understanding of restoration techniques, and of their relationship to the complex and chemical make-up of natural stone, is essential.

Cleaning is the removal of dirt, paint, graffiti, stains and surface residues. Success in the cleaning of stone can be defined in terms of the ease and completeness of removal of these substances, without harm to the stone itself, or to the restoration craftsman. Thus, the selection of a "proper" cleaning method often represents a compromise involving a great many factors, such as project deadlines and budget, availability of skilled workers, and questions of health and safety.

In addition to developing and publishing a wide variety of technical information, the National Park Service, through its Preservation Assistance Division, serves as a clearinghouse for responsible preservation guidance that is published elsewhere—both nationally and internationally. This approach has yielded more than satisfactory reciprocity. *Preservation Briefs* and longer technical reports have been widely reprinted and excerpted. "Preservation Technology Update" continues the clearinghouse approach by featuring an article by one of the country's top conservators, Norman R. Weiss.

In the context of restoration, competent cleaning requires the use of projects and techniques that are specific to the problem at hand. An understanding of the physical and chemical characteristics of natural stone, and of the many types of soiling that can be encountered, will aid in the selection of an optimum method from the several that are available to today's restorer.

Cleaning Exteriors

For marble exteriors, water spraying (first done in France and England) is probably the simplest method for the removal of dirt. On marble buildings, soiling is often very irregularly distributed, with the heaviest deposits found beneath projecting elements, such as cornices, belt courses and window sills. In such locations, the dirt is incorportated into a weathering crust of gypsum, which is considerably more water-soluble than the stone itself. Thus, areas fully exposed to the washing action of rain are clean. The gentle spraying of water for a period of several hours is often sufficient to cause dramatic removal of dirt deposits. The water used must be clean and free from metallic impurities, especially iron. A filtration and purification system is strongly recommended. To minimize the total amount of water used, spraying can be intermittent, controlled by timing switches. With this method as with pressure washing—a more versatile technique for the cleaning of exterior stonework—intrusion of water into the structure is a serious hazard. Overall building condition must be fairly sound. It may be necessary to do some remedial work, such as pointing or temporary caulking, prior to cleaning.

This photograph illustrates repair of historic sandstone using a composite patching method which involves patching the deteriorated portions of the stone with a cementitious material containing an aggregate of sand or crushed stone. Sometimes artificial coloring may be added in order to make the patch blend with the stone, or the patch can be painted to match the adjacent stone. Photos by National Park Service.

Pressure washing is essentially the use of water to scrub the stone clean. When dirt is loosely bound to the surface, as is sometimes the case for polished granites, this technique may be sufficient to remove most soiling. But on textured surfaces, and where the soiling is more resistant to water, chemicals are often used. The United States has been a leader in the development of chemical cleaning techniques for stone buildings. Products designed to remove dirt from granite exteriors generally contain

(continued on page 16)

How to Restore Stone
(continued from page 15)

hydrofluoric acid; they may be harmful to marbles. Adjacent glass and aluminum will require protection during cleaning. Acids are usually applied for only a short period of time (typically a few minutes), then rinsed by pressure washing.

Paint stripping, on the other hand, requires considerably longer contact of chemicals with the stone. In this instance, most of the cleaners used are alkalines; they do not etch marbles, but may result in some staining of granites by the oxidation of iron-containing minerals. Strippers are left on the surface for several hours. Softened paint and excess chemicals are then flushed by pressure washing. Safe disposal of this sludge is always an important consideration, as is correct project sequencing, to avoid damage to new painting.

Mechanical removal of mortar residues, hardened adhesives and other construction materials can be done carefully with hand tools or lightweight pneumatic chisels. In most restoration work, power grinders and sanders are not used, as they can do significant damage to an area larger than that of the problem itself. Abrasive blasting (sandblasting) is similarly not considered a safe technique for restoration cleaning. Even tough stones, such as granites, can be harmed irreversibly unless special techniques, such as the use of "soft" aggregates and low pressures, are used.

Cleaning Interiors

The cleaning of interior stonework poses some special problems. Although stripping old floor finishes can be accomplished with machines, wet cleaning of walls is considerably more difficult. In Italy, a bicarbonate gel developed for cleaning fresco paintings has been used on marble. Removal of surface dirt from polished marble walls can also be done with neutral or mildly alkaline liquid detergents, applied and lightly rinsed with sponges and cloths. Streaking is hard to control, but can be minimized by rinsing from bottom to top.

Where adjacent interior materials are fragile, liberal use of water may be impossible. In this situation, cleaning can be done with poultices. A poultice is a moist pack of an inert powder—often fuller's earth or china clay—mixed with a liquid cleaner. Careful selection of the active component permits the custom formulation of poultices to suit individual project needs.

Because they are absorbent, poultices are extremely useful for removing stains and graffiti. Moreover, they are an effective means of keeping slow-acting chemicals in contact with a vertical surface. Iron stains can be removed from granites with an oxalic acid poultice; ammonium citrate should be used on marbles to avoid acid etching.

Graffiti and some organic stains will respond to solvents, such as lacquer thinners and chlorinated hydrocarbons, especially when still "fresh." Persistent discoloration associated with biological activity, tobacco smoke, and old, darkened coating residues may be removed with bleaching poultices. The active ingredient can be hydrogen peroxide or a hypochlorite bleach. Calcium hypochlorite ("chlorinated lime") has been used for cleaning interior marble for decades, commonly applied as a wet paste mixed with hydrated lime.

Surface Treatments

The use of surface treatments and consolidants is among the most confusing and controversial aspects of stone restoration today. Organic coatings (sealers) are used for a variety of purposes. They enhance the color and gloss of stone without repolishing, which can be a costly and difficult operation to carry out in place. As they reduce the absorption of liquids, they can be applied to protect flooring and countertops from staining, and can be used as graffiti barriers.

Coatings are also used to lessen the effects of wear, but with greater difficulty. For high traffic surfaces, they will need periodic renewing. Hard finishes, while fairly resistant to abrasion, are difficult to strip. Use of an acrylic sealer topped with a paste mix, which can be buffed and occasionally reapplied, is frequently a more satisfactory treatment.

When used on building exteriors to retard weathering, sealers are considerably less successful. Because they act as solid barriers to water, including water entering the stone from behind, coatings can actually encourage moisture entrapment, which will advance decay. Coatings can be, themselves, short-lived outdoors, becoming cloudy or yellowed. When applied to highly polished exterior stonework, most coatings are also likely to peel.

Water-repellents, sometimes called breathable sealers, can keep exterior stonework dry without trapping moisture. Silicones and stearates are examples of this category of surface treatment. Unfortunately, they may not be effective for more than two or three years, especially on marbles. They share with conventional sealers an inability to be used on deteriorated surfaces, where the film or "skin" that is established will soon spall, contributing to continued deterioration.

Some successful use of consolidants for the in-depth stabilization of soft, fragile stone has been reported in the past two decades. Consolidation is the enhancement of cohesion by deposition of new material within the pore structure of the stone. Barium hydroxide treatment, which is specific for marbles, has recently been used on several large public buildings in the United States.

Another type of consolidant, used in West Germany since the early 1970s, is ethyl silicate, frequently handled in combination with alkyl silanes, which provide water-repellency without "skin" formation. These products have been principally used on silicate rocks (sandstones and granites), but also seem to be useful for the treatment of limestones and some marbles. Italian techniques of impregnation with acrylics and silicone-modified acrylics are carried out in most American museums for the restoration of sculpture, but are not yet in widespread use for the treatment of architectural stonework.

Update

Pointing, Patching and Repair

Pointing, patching and repair are essential operations in most restoration projects. Pointing, frequently called grouting for interior stonework, reestablishes a mechanical defense against water intrusion. Formulations suited to this purpose must exhibit low shrinkage, good adhesion and mechanical compatibility with the stone in its weathered condition. A common pointing mix for restoration in the United States is a soft mortar, ASTM Type N, containing white Portland cement, hydrated lime and sand.

Similar formulations are used for patching, with the addition of crushed stone and alkali-stable pigments to achieve a suitable appearance. (In France, these patching compounds are often based on hydraulic lime, which is not commercially available in the United States; in Italy, restorers work with mixtures of lime and crushed brick or pozzolana.) Soft stone is removed with hand tools, and the new material installed as a stucco sometimes requires an armature for soundness. Filled organic resins are also available, but do not perform well outdoors, largely because of excessive thermal expansion.

Loose stones can be removed and reset, replacing old anchors with new ones of brass or stainless steel. Where a stone is fractured, it can be repaired with structural adhesives. These are two-part glues, generally epoxies or polyesters. Considerable care is required to prepare the break for gluing by removing all loose dirt and previous repair materials. Many high-strength adhesives cure slowly, necessitating clamping to keep the glue line immobile for several days. When large pieces of stone are being glued, non-corroding structural pins are recommended.

Replacement of deteriorated or damaged stone with new elements may be an important alternative to patching and repair. Although synthetic units of fiber glass and pre-cast concrete can be used, their lifetime is always uncertain, especially when judged in terms of aesthetics. If new matching stone is available, it is generally acknowledged to be the preferred replacement material. In some restoration projects it may be possible to re-use identical older stone, transferring it from one location to another, or acquiring it as salvage from another site. The total amount required can sometimes be minimized by creating "dutchmen": partial units that are used where there has been localized damage to an otherwise sound piece.

Techniques for the restoration of stone have advanced significantly in recent years, as restoration itself now plays an increasingly important role in the activities of many mason contractors and design professionals. The exacting standards of this type of work have demanded that the construction industry be better informed about the characteristics of stone as a building material. This, in turn, will surely lead to the safer use of stone in contemporary architectural practice.

Norman R. Weiss is adjunct associate professor, Graduate School of Architecture, Planning and Preservation, Columbia University, and also a consultant in stone conservation.
This article was originally developed for the catalog accompanying the exhibition "Marble: Italian Culture, Technology and Design" in New York City, March 7-15, 1987, sponsored by the Italian Marble Center. It has been excerpted with permission from the April 1988 issue of *Stone World* (Tradelink Publishing Co., 485 Kinderkamack Road, Oradell, New Jersey 07649). Beginning this spring, *Stone World* will feature a monthly column called "Preservation Techniques."

Bulletin Board

Works in Progress/Assistance Needed

Subject: Uses of sheet metal in historic buildings. **Information Needed:** Interesting and unusual examples of sheet metal used in historic buildings as ornamental features crafted by tinsmiths, and as manufactured features used as interior and exterior finishes. **Contact:** Rebecca A. Shiffer, Mid-Atlantic Regional Office, National Park Service, U.S. Customs House, Room 251, 2nd and Chestnut, Philadelphia, PA 19146; 215/597-5822.

Subject: Lead paint contamination in historic buildings. **Information Needed:** Solutions to contamination problems; experience with cases of elevated blood-lead levels; discovery/determination of contamination; abatement requirements and techniques and post-abatement testing; regulations and enforcement. **Contact:** John Hnedak, Mid-Atlantic Regional Office, National Park Service, U.S. Custom House, Room 251, 2nd and Chestnut, Philadelphia, PA 19146; 215/597-1577.

Services

Since 1987, the National Center for Preservation Law has been publishing a series of updates that focus on current legal cases and issues of interest to preservationists. A one-year membership is available for $55 by writing: National Center for Preservation Law, 1233 20th Street, NW, Suite 501, Washington, DC 20036; 202/828-9611.

Request for Federal Agency Contributions

One of the goals of "Preservation Technology Update" is to encourage the exchange of technical preservation information among Federal agencies. If you have information to contribute to the *CRM Bulletin*—new publications, proposed regulations, upcoming workshops, or other current projects of interest to preservationists—send to: Preservation Assistance Division (424), National Park Service, U.S. Department of the Interior, P.O. Box 37127, Washington, DC 20013-7127.

Update

Feedback

Concealed Repair of Fractured Masonry

Blind pinning or concealed repairs can be successfully completed on sandstone, limestone, or marble elements if there is a clean break between two sections. This concealed repair is known as a mechanical repair and involves drilling holes and inserting reinforcing pins into each fragment. Epoxy is then used to adhere the two fragments. Cases of this type of damage range from vandalized statues to accidental breakage of delicate projecting architectural elements. These pinned repairs should be undertaken only on stone that is in sound condition. Eroded or excessively weathered stone may require consolidation or rebuilding of elements. Shown are a finial and a tombstone repair. Concealed repairs should be undertaken only by skilled craftsmen.

Drilling Holes: The number of holes will vary with each project, but generally the mason drills the holes in a staggered pattern or far enough away from one another to avoid splitting the stone. The diameter of the hole should be about 1/8th inch greater than the diameter of the pin; the length of the hole will be half the length of the pin. To obtain a good anchorage, the depth of the hole should be a minimum of four times the diameter of the pin. The pins are generally small, approximately 1/8"-1/4" in diameter by 1"-2" in length. An engineer may be required to design the size and placement of the pins if there are eccentric loads.

Pins: Non-corrosive pins should be used as a reinforcement. Merely gluing or grouting the two fragments will often result in failure after a short period of time. Thermoplastic rods, such as nylon, are excellent because they have coefficients of expansion similar to the epoxy adhesives. Stainless steel and bronze are also good, but must be free of surface oil or contaminants. Pins that are threaded or grooved will provide a good surface for adhesion.

Concealed repair of sandstone finial using epoxy adhesives. Illustration drawn by Frederick R. Love, architect, and reproduced from "The Maintenance and Repair of Architectural Sandstone," prepared by Michael F. Lynch and William J. Higgins for the New York Landmarks Conservancy, New York, New York, 1982.

1. *Clean surfaces to be joined.*
2. *Protect adjacent surfaces with rubber cement.*
3. *Drill staggered rows of holes; depth equal to 4x pin diameter, width 1/8" greater than pin diameter.*
4. *Fill holes with rigid (high modulus) epoxy adhesive.*
5. *Set pins.*
6. *Coat stone surfaces to be joined with flexible (low modulus) epoxy adhesive.*
7. *Set detached piece in place. Gently tap with a rubber mallet to seat stone.*

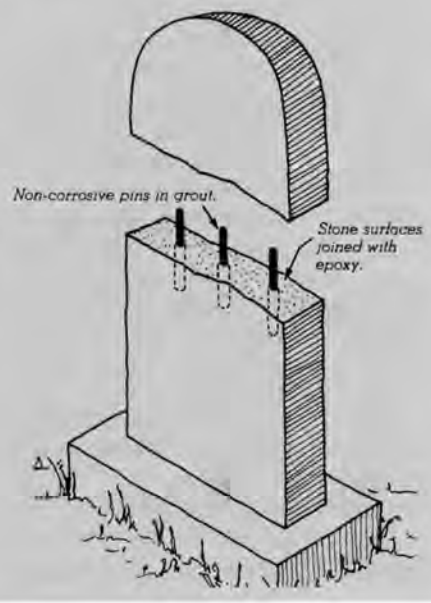

Mechanical repair of detached tombstone using grout and pins. Illustration drawn by Christina Henry and reproduced from "A Glossary of Historic Masonry Deterioration Problems and Preservation Treatments" compiled by Anne E. Grimmer, National Park Service, Washington, D.C., 1984.

Non-corrosive pins in grout. Stone surfaces joined with epoxy.

Adhesive: There are two types of epoxy resin used in this type of repair. Both are unaffected by moisture. The adhesive used to hold the pins is a high-strength (high modulus) epoxy used for structural repairs and the setting of bolts. It is fairly rigid. Masonry grout can also be used to set the pins, as seen in the tombstone example. A more flexible adhesive epoxy, a low modulus compound, is used to bind the two fragments together.

Cautions: Only a skilled mason should attempt this repair. To avoid staining by the epoxy, rubber cement has been successfully used to coat adjacent surfaces before repairs are undertaken. Once the two units have bonded, the rubber cement can be removed. Epoxy resins can present health problems and all appropriate precautions outlined by the manufacturers should be followed.

This Feedback article was prepared by Sharon C. Park, AIA, and Anne E. Grimmer, Preservation Assistance Division, National Park Service.

Computer News

Betsy Chittenden

Telecommunications Basics

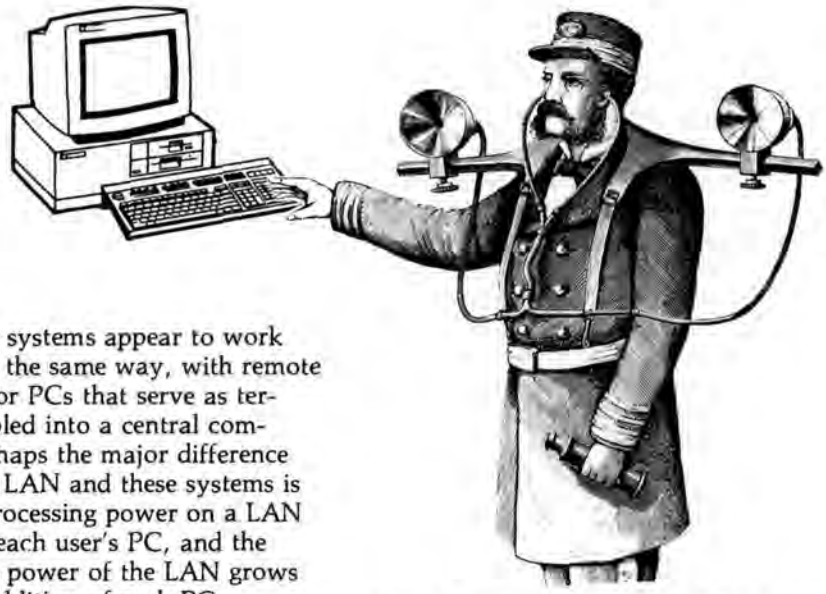

Computer communications could well be the most technical, most jargon-filled, most confusing part of computer use that the average user will encounter. Over the next two years there will be a multitude of changes in telecommunications within the Federal Government. What is there to electronic communications in the National Park Service? What are these changes, and how will they affect the National Park Service and the cultural resources community?

Most communication is one of three basic types: voice communication, mail messages, and data files, such as spreadsheets or wordprocessing documents. A communications *environment* is the mixture of hardware, software, and transmission methods that allow information to be transferred electronically. For example, the current voice communications environment in the NPS is a mixture of FTS phone service and commercial local and long distance telephone carriers.

The most direct method of sending messages or data files between computers is to use a type of software called *asynchronous communications software* to directly connect one computer to another. A person in one location uses a software package such as Procomm (the NSP standard) or Crosstalk to call another computer directly, using the regular phone lines. The drawback to this type of communication is that it requires prearrangement between users prior to doing the transfer—the person at the other end must know to turn on the computer, and await the call.

An internal communications method used in many offices is the *local area network* or *LAN*. In a LAN, a number of PCs are physically linked by cables to a central PC, called a "file server." This arrangement allows a LAN user to access documents and files stored centrally on the file server, and to share printers and sharable software. Many minicomputers and some dedicated wordprocessing systems appear to work essentially the same way, with remote terminals or PCs that serve as terminals cabled into a central computer. Perhaps the major difference between a LAN and these systems is that the processing power on a LAN resides in each user's PC, and the processing power of the LAN grows with the addition of each PC.

Electronic mail is a communications service for short written messages, and in some cases data files. Traditional electronic mail service uses a central mailbox concept. Users dial into the system through their asynchronous communications software and can send a message or transfer a data file over standard phone lines. The message or data file is held in the central computer of the electronic mail service until the mail recipient signs onto the system and reads the mail or downloads the data file.

CompuServe, a commercial service, has been the Departmentwide standard electronic mail system since 1987. The NPS presently uses CompuServe for inter-regional elecronic mail and for some intra-regional electronic mail. Although CompuServe is not particularly efficient for sending large data files, due to lack of other alternatives CompuServe is currently being used to transfer some large files. A number of other electronic mail systems are in use scattered across the Service, mostly in the form of regional minicomputers or local area networks.

Bulletin boards (often abbreviated BBS) are a type of electronic mail in which a single message is posted to be read by a number of persons, rather than a message sent to just select people. This spring, the under-used Servicewide bulletin board on WASO's HP-3000 minicomputer will be replaced by CompuServe service called Forums. Each CompuServe Forum will be topic-specific and provide a place for CompuServe users to post information and public messages for other users with similar interests. A WASO-based moderator familiar with the topic will oversee Forum membership and information.

Problems associated with transferring large data files have led to the implementation of *SEAdog* software in a number of Service locations. SEAdog sends mail and data files directly between computers at night according to instructions preset by the user, who must remember only to leave the computer turned on at night. This eliminates the need for a commercial middleman service, and the messages are sent when telephone costs are lowest, and when the computers are not in use for other tasks. SEAdog has proved particularly useful for moving large data files between field areas and the regional office, as is required by Servicewide systems such as the new Administration Finance System. Five regions have adopted

(continued on page 20)

Telecommunications Basis
(continued from page 19)

SEAdog as a software standard for intra-regional electronic mail and file transfer, and it is a recommended NPS standard.

Communications Changes

Within the next two years, the Federal Government will be getting a new communications system called *FTS-2000*. FTS-2000 will not only replace the current FTS telephone system, but will also offer a variety of services, including electronic mail services and data file transmission. The FTS-2000 contract was awarded to two vendors, AT&T and U.S. Sprint; the NPS is on the AT&T side of the contract. FTS-2000 will service every Government location in the 50 states, Guam, Puerto Rico, and the Virgin Islands. The use of FTS-2000 services will be mandatory once they are made available. The first users of FTS-2000 are expected to be transferred in September 1989 with all users converted by July 1990.

Another important communications change goes by the unlikely name of *GOSIP*. GOSIP (Government Open Systems Interconnection Profile) sets up standard communications protocols for the entire Federal Government. The GOSIP standard became effective this past February, and in August 1990 will become mandatory for all new procurements. The first (and so far only) specification in GOSIP is the *X.400* (pronounced "X dot 400") standard, an international standard for interconnecting electronic mail systems.[1] The X.400 standard allows electronic mail users to exchange messages independently of the particular systems they use. Once implemented, it will be possible for a Wang electronic mail user in the North Atlantic Region to send messages to a cc:Mail user on the Novell LAN in the Alaska Regional Office. GOSIP/X.400 supports a rich set of features, far more than any software currently used in the NPS is capable of providing. The messages can contain any kind of electronic data including files, facsimile, text, graphics, or digitized voice. A number of services such as return receipts, notification of non-delivery, time-stamping, multi-destination delivery, deferred delivery, and alternate recipient assignment are a part of the standard. Use of X.400 messaging by users of all types is expected to become widespread over the next several years.

The impact of FTS 2000, GOSIP, and X.400 messaging on the National Park Service is potentially immense. The Servicewide exchange of NPS memos, messages, and documents, regardless of different computer systems, is the primary benefit. But FTS-2000 will also allow inter-agency communication between all agencies on the AT&T side of FTS-2000, and—once interconnected with U.S. Sprint—to all Government agencies. Finally, the technology will simplify communications with the public, allowing the electronic mailing of documents such as purchase orders to vendors.

Changes within NPS

How will this affect the National Park Service? Unfortunately, although we know in theory what FTS-2000 and X.400 software should provide, what the real communications environment will be by 1991 is still unclear. Costs, user-friendliness, and the timing of the introduction of various services make it difficult to know exactly what changes will happen and when. The overall strategy of the Service is beginning to take shape, however. Currently, it is expected that basic electronic mail services will be handled by the electronic mail service of FTS-2000, making CompuServe services unnecessary; the CompuService contract, which is scheduled to expire in 1991, would not be extended. Large file transfer methods are not as clear. Although the ability to attach any type of computer file to an electronic mail message if built in to X.400, file transfer via X.400-compatible software is expected to be cost-effective only for moderate-sized files. It is unclear at this point how bulletin board services may be provided to NPS users in the coming new environment.

The Information and Data Systems Division (IDSD) will coordinate the orderly transition to GOSIP/X.400 and FTS-2000. The Division expects to work closely with regional offices in testing GOSIP/X.400 compliant products as they become available, and in coordinating the transfer of electronic mail services to FTS-2000. The IDSD staff will research the appropriate methods for large file transfer under the new environments of FTS 2000 and GOSIP. Correspondence and communications standards and protocol will be reviewed and updated. Until the transition to FTS-2000 and X.400 is complete, both CompuServe and SEAdog are expected to remain as the mainstay of NPS electronic mail communications. In the interim, the NPS ADP Standards Committee is working on Servicewide guidelines for appropriate uses of CompuServe and SEAdog.

Simple, standardized electronic communications is particularly important in a widely dispersed community such as the cultural resources community, which includes Federal, state, and local governments, private organizations, and academic institutions. Having a more effective communications environment in place will allow the cultural resources community to share information and work together more effectively. NPS offices that must now juggle CompuServe, SEAdog, local area networks and other electronic communications possibilities will have less to know and support. Accessing the various databases scattered throughout the National Park Service will become simpler. If the X.400 standard is used widely throughout the U.S., as is expected, communications between the NPS and non-Service cultural resources organizations will become easier. As changes in the communications environment become reality, we will keep you apprised of them, and suggest how you can take advantage of them.

This article was co-authored by Jonathan Lewis, Computer Specialist with the Information and Data Systems Division and stationed at Channel Islands National Park, CA.

[1]*Subsequent GOSIP specifications are expected to include such topics as virtual terminals and directory standards and will not be discussed here.*

If you have questions or comments, please call Betsy Chittenden at (FTS or area code 202) 343-9521, or write to our CompuServe address, IMC-WASO-CUL.

Applications Exchange

List of Classified Structures (LCS)

After three years of testing and enhancement, the List of Classified Structures (LCS) has been finalized. The LCS is an evaluated inventory of significant historic structures in which the National Park Service has any legal interest. The LCS is available in each NPS regional office and selected parks on a dBASE III Plus microcomputer system. The dBASE III Plus system provides user-friendly menus, data entry screens, edit procedures, and six standard reports including: a Single Entry Report that lists all the data elements on a specific structure: a Park/Structure Index, a comprehensive index arranged alphabetically by park and structure number; a Function Type Report that lists specific function types (fortications, landscapes, etc.); a Park Report that lists all structures for a specific park; and a blank input form that matches the data entry screens.

In 1989, the Servicewide database will be converted from the INQUIRE mainframe system to the NPS-owned Hewlett-Packard minicomputer system. The same microcomputer reports will also be available Servicewide through dial up access to the NPS COMMON database with user-friendly menus and screens. Data from the region-based dBASE III Plus systems will be uploaded to the Servicewide LCS on a regular and continuing basis.

LCS and CRBIB User Manual

A new user manual for both the LCS and the CRBIB will be distributed to all regional directors, park superintendents, and center chiefs in 1989. The manual will detail the background of the databases, procedures for entering data into the dBASE III Plus microcomputer system, and instructions for dial-up access to the Servicewide databases to be maintained on the NPS COMMON database in the Washington Office.

LCS Stastics

Region	No. of Structures
Alaska	120
Mid-Atlantic	1,647
Midwest	1,245
North Atlantic	774
National Capital	1,342
Pacific Northwest	333
Rocky Mountain	2,573
Southeast	2,698
Southwest	1,114
Western	2,830
Total	14,676

If you would like a copy of the user manual or further information on the LCS, call Alicia Weber, Park Historic Architecture Division, FTS 202/343-8149.

Clip and Save

Applications Exchange

Cultural Resources Management Bibliography (CRBIB)

After three years of testing and enhancement, the Cultural Resources Management Bibliography (CRBIB) has been finalized as a microcomputer database system on dBASE III Plus for the NPS regions and parks. The dBASE III Plus system provide user-friendly menus, data entry screens, edit procedures, and six standard reports including: a Single Entry Report that lists all the data elements on a specific report; an Author/Title Index, a comprehensive index arranged alphabetically by author; an IDLCS (structures) Report that lists all reports documenting a specific structure; a Study Type Report that lists specific study types (RMP, HSR, etc.); a Park Report that lists all reports for a specific park; and a blank Input Form that matches the data entry screens.

The same reports will also be available Servicewide through dial-up access to the NPS COMMON database maintained on the NPS owned Hewlett-Packard minicomputer with user-friendly menus and screens. Data from the region-based dBASE III Plus systems will be uploaded to the Servicewide CRBIB on a regular and continuing basis. A new user manual documenting the CRBIB will be distributed to each park in 1989.

The CRBIB on Microfiche

A three-year project to microfiche all available reports on the CRBIB has been completed. Chadwyck-Healey Inc., a private publishing firm, has completed the filming of over 5,000 reports contained on the CRBIB through December 1985. The microfiche is not only available for sale to the general public, but is also being distributed to appropriate regional offices and parks. A supplemental project to film all reports added to the CRBIB through 1988 is underway.

CRBIB Statistics

Region	No. of Reports
Alaska	156
Mid-Atlantic	1,126
Midwest	1,321
North Atlantic	1,343
National Capital	713
Pacific Northwest	217
Rocky Mountain	719
Southeast	1,261
Southwest	1,330
Western	867
WASO	127
Total	9,180

For further information on the CRBIB, call Alicia Weber, Park Historic Architecture Division, FTS 202/343-8149.

Capitol Contact

Bruce Craig

The Bicentennial Congress

On March 2, 1989, the members of the 101st Congress put aside partisan political squabblings to celebrate the upcoming bicentennial of the first Congress, with a special joint session which featured a presentation by author/historian David McCullough. It was a day for Congress to reminisce and remind itself that the august body has many accomplishments to be proud of. Historian McCullough pointed out that the history of the American Congress is not one reflecting "an unbroken parade of clowns and thieves and posturing windags . . . What should be spoken of more often are the decisions of courage and vision achieved."

But McCullough also expressed his view that the rich history of Congress has been dismally told when he said, "Our knowledge, our appreciation of the history of Congress and those who made history here are curiously regrettably deficient."

In a recent interview, Raymond Smock, the newly appointed historian of the House of Representatives, expressed his belief that one problem in telling the history of Congress is that the "study of elites" is out of fashion and that historians are getting away from writing political history. "The pendulum has swung so far toward social history that we've begun to neglect good old fashion political history."

President Reagan, in his farewell address, also lamented that America must do a better job teaching history, "based not on what's in fashion, but what's important." To him, the lack of attention to American history has resulted in "an eradication of the American memory that could result, ultimately, in an erosion of the American spirit." Words to contemplate.

Successor to Leopold Report

National Parks: From Vignettes to a Global View, the long-awaited report of the seventeen member "Commission on Research and Resource Management Policy in the National Park System," was released on March 19, 1989, at a one-day symposium held in conjunction with the 54th North American Wildlife Conference. It was a most fitting occasion for releasing the report. Twenty-five years age, Dr. Starker Leopold and his colleagues offered their report to the then Secretary of the Interior Stewart Udall at the plenary session of the 28th North American Wildlife and Natural Resources Conference. The Leopold report set the philosophical framework for science and resource management in the National Park System.

NPCA, in coordination with the National Park Service, convened the commission to reexamine the principles advanced in the Leopold Report in terms of both natural and cultural resources management and to assess the Park Service's current research programs. Chaired by Dr. John Gordon, Dean of the Yale School of Forestry and Environmental Studies, the commission included not just ecologists but historians, anthropologists and social scientists from across the Nation.

This report (which will probably come to be known as the "Gordon Report") advances a much talked-about notion of how our national park legacy should be managed—"ecosystem management." The next installment of "Capitol Contact" will feature a summary of the Commission findings. But in the meantime, those interested in learning how to order a copy of *From Vignettes to a Global View* may write to me at NPCA, 1015 31st Street, NW, Washington, DC 20007.

Book Review

Keeping Time: The History and Theory of Preservation in America. By William J. Murtagh (Pittstown, NJ: Main Street Press, Inc., 1988. 240 pp. Illustrations, chronology, glossary, bibliography, appendices, index. $25.00, cloth.)

The first part of the book traces the history of historic preservation in the United States from the 18th century to the present. The second part examines selective aspects of the preservation movement. The author starts by defining for the reader the basic vocabulary of preservation. This should prove helpful to the neophyte and thought provoking to the initiated.

The next four chapters concentrate on a chronological history of preservation. This history begins with private preservation initiatives in the late 18th century, usually motivated by the desire to commemorate patriotic events or personages or inspire a feeling of nationalism, and goes through the Federal legislation passed in the 20th century which broadens and deepens the movement. The contributions and role of Federal agencies, including those of the National Park Service, are mentioned only in the most general terms.

The next seven chapters are essentially discourses on various preservation activities. Murtagh provides considered analysis of such topics as the development and purpose of the outdoor museum, and the rehabilitation and adaptive use of historic structures. In addition, he discusses the concept and practice of creating historic districts, the efforts to preserve landscapes, the challenge of preservation work in rural and small town areas, and the use of archeology in preservation.

More than 50 pages of the work are devoted to appendices covering selected Federal preservation legislation, National Register to Historic Places nomination criteria, and the Secretary of Interior's standards for rehabilitation. These appendices do little to enhance the book's content. The chronology of preservation events, glossary of terms, and bibliography are of greater value though one can certainly find a number of important definitions, topics, and events not adequately addressed. This may be a direct consequence of the size of the task rather than lack of effort by the author.

This book is an extended personal essay rather than an in-depth, comprehensive history of American preservation. Murtagh certainly has the credentials for such an undertaking, having been involved in historic preservation for more than 25 years. During this time, he served as the first Keeper of the National Register of Historic Places and vice president of the National Trust for Historic Preservation. This volume serves as an important introduction for those interested in the field of historic preservation and stimulating for those professionals working with preservation on a daily basis.

—John C. Paige
Historian, Denver Service Center,
National Park Service.

Announcements

Historic Seeds and Plants List Available

A selective "Source List for Historic Seeds and Plants" has been issued by the Association for Living History Farms and Agricultural Museums. Compiled by landscape historian Scott G. Kunst and ALHFAM's Seeds and Plant Materials Committee, the annotated list includes over 100 North American nurseries and seed-houses that carry a significant number of historic flowers, shrubs, trees, vegetables, herbs, and fruit. Also included are suggestions for locating historic plants through non-commercial sources.

For a copy of the list, send $1.00 and a stamped, self-addressed, business-size envelope to Scott G. Kunst, Old House Gardens, 536 Third Street, Ann Arbor, MI 48103. To join ALHFAM, send $10 (individual) or $25 (institutional) to George Paloheimo, Old Cienega Village, Route 14, Box 214, Santa Fe, NM 87505.

"Tourism and America's Heritage: Opportunities for Growth"

The National Trust for Historic Preservation will hold two conferences to examine the role that cultural and historic resources can plan in expanding local and regional economic opportunities through tourism, now a $313 billion industry in the U.S. and growing stronger each year.

The conferences will be held on May 18-19 in New Paltz, New York, and June 1-2 in St. Paul, Minnesota. They are designed for preservationists, planners, economic development officials and civic leaders.

For more information, contact Peter Hawley, Program Manager for Special Projects, National Trust for Historic Preservation, 1785 Massachusetts Avenue, NW, Washington, DC; 202/673-4219.

Annual Meetings

The National Council on Public History and the Southwest Oral History Association will hold their annual meetings jointly in San Diego, CA, March 7-10, 1990. The NCPH program committee invites submissions for complete sessions, individual papers, panels and media presentations. The general program theme will be "History: Cities, Parks, and People." Proposals should consist of a one- to two-page summary and a resume for each participant. Deadline for proposals is June 1, 1989, but early submissions would be appreciated. Send three copies of the proposal to the NCPH Program Chair, Murney Gerlach, History Dept. Alcala Park, Univ. of San Diego, San Diego, CA 92110; Tel: 619-260-4600 X4756.

National Trust Turns 40

The National Trust for Historic Preservation celebrates its 40th anniversary in 1989. It was established in 1949 through a charter granted by Congress to create a private national organization to help save endangered places that contribute to the Nation's character. The Trust now numbers more than 200,000 direct supporters as it enters its anniversary year.

Training Classes

The Campbell Center For Historic Preservation Studies begins its ninth season of training classes in conservation and preservation with an Architectural Preservation course to be offered in April.

For information on other courses and a copy of the Campbell Center 1989 Program Brochure, contact Campbell Center, P.O. Box 66, Mount Carroll, IL 61053; 1-815/244-1173.

Hessian Papers Microfiche Edition

The Hessian Documents of the American Revolution, 1776-1783: Transcripts and Translations from the Lidgerwood Collection at Morristown National Historical Park, Morristown, New Jersey is now available on microfiche. Copied from the original 18th century records in German archives, the Lidgerwood Collection is the largest group of translated documents written by officers of the Hessian and other German troops that fought in America during the Revolutionary War.

Published under cooperative agreement with Morristown NHP, the edition contains more than 30,000 pages of German transcriptions and English translations on 362 microfiche. It is available to all NPS offices at a special rate of $650.00 (50% off the normal prepublication price) until March 31, 1989. For more information, contact Park Curator James L. Kochan at 1-201/539-2016.

CRM BULLETIN

Volume 12: No. 2

Published by the National Park Service for parks, Federal agencies, states, local governments, and the private sector to promote and maintain high standards for preserving and managing cultural resources.

Director: James M. Ridenour
Associate Director: Jerry L. Rogers
Managing Editor: Ronald M. Greenberg
Associate Editor: Michael G. Schene
Production Manager: Karlota M. Koester

Cultural Resources, Washington, D.C.

U.S. Department of the Interior
National Park Service
Cultural Resources
P.O. Box 37127
Washington, DC 20013-7127

Third Class Mail
Postage & Fees Paid

U.S. Department of the Interior
G-83