CRM

CULTURAL RESOURCE MANAGEMENT
Information for Parks, Federal Agencies, Indian Tribes, States, Local Governments, and the Private Sector

VOLUME 21 NO. 7 1998

America's Mining Heritage

U.S. DEPARTMENT OF THE INTERIOR
National Park Service
Cultural Resources

PUBLISHED BY THE NATIONAL PARK SERVICE

To promote and maintain high standards for preserving and managing cultural resources

Contents

VOLUME 21 NO. 7 1998
ISSN 1068-4999

America's Mining Heritage

Mining History—A New Dialogue . . . 3
Robert L. Spude

Industrial Archeology and Historic Mining Studies at Michigan Tech 4
Patrick E. Martin

Geology National Historic Landmark Theme Study 6
Harry A. Butowsky

Quincy Mining Company Landscape in Keweenaw National Historical Park . . 8
Edward B. Yarbrough

Interpretation at the Western Museum of Mining and Industry 10
Eric L. Clements

Canada Post Celebrates the Canadian Institute of Mining 12
Elia Anoia

Reflections on Previous Ruminations—Some Thoughts about Mining Site Eligibility and National Register Bulletin 42 13
Bruce J. Noble, Jr.

Newgate Prison and Copper Mine . . .15
David A. Poirier
Mary G. Harper

Historic Mines of Chesapeake & Ohio Canal National Historical Park 17
Dianne Ingram
Doug Stover

Mexican Mining Heritage—The Real Del Monte Site 19
Inés Herrera
Rina Ortiz

The Mayflower Mill—Reclamation and Re-use 23
Beverly Rich

Finding Them Was the Easy Part—Making Sense of Historic Mine Sites on the Last Frontier 26
Logan W. Hovis

Gold Rush-Era Mining Sites in Alaska's National Parks 30
Frank Norris

Geoarcheology of the Jinny Hill Mines 31
Greg A. Brick
Robert M. Thorson
David A. Poirier

Cow Heads and Trout Farms—Underwater Exploration of the Dalliba-Lee Mine 35
Arthur B. Cohn

A Tale of Mines, Prospectors, and Native Americans—The Making of Glacier National Park 40
Robert D. Higgins

If the Walls Could Speak—Mariscal Mine HAER Documentation 44
Art Gómez

Abandoned Mines as Bat Habitat 46
J. Scott Altenbach

Tri-Cultural Use of the Cerrillos Mines 49
Frances Joan Mathien

Treasure Hill and the Archeology of Shermantown 53
Donald L. Hardesty

The Kelly Mine—Archeological Monitoring and Hollywood Magic . . .57
Barbara Mackey

The Threats to our Mining Heritage—A Provincial Point of View 61
Homer E. Milford

Cover: Barite miners at the Jinny Hill Mine entrance (c. 1875). Photo courtesy Cheshire (CT) Historical Society.

DIRECTOR
Robert Stanton

ASSOCIATE DIRECTOR
CULTURAL RESOURCE STEWARDSHIP AND PARTNERSHIPS
Katherine H. Stevenson

EDITOR
Ronald M. Greenberg

ASSOCIATE EDITOR
Janice C. McCoy

GUEST EDITORS
David A. Poirier
Robert L. Spude

ADVISORS
David Andrews
Editor, NPS
Joan Bacharach
Museum Registrar, NPS
Randall J. Biallas
Historical Architect, NPS
Susan Buggey
Director, Historical Services Branch
Parks Canada
John A. Burns
Architect, NPS
Harry A. Butowsky
Historian, NPS
Pratt Cassity
Executive Director,
National Alliance of Preservation Commissions
Muriel Crespi
Cultural Anthropologist, NPS
Mark R. Edwards
Director, Historic Preservation Division,
State Historic Preservation Officer, Georgia
Roger E. Kelly
Archeologist, NPS
Antoinette J. Lee
Historian, NPS

ASSISTANT
Denise M. Mayo

An electronic version of this issue of *CRM* can be accessed through the *CRM* homepage at <http://www.cr.nps.gov/crm>.

Statements of fact and views are the responsibility of the authors and do not necessarily reflect an opinion or endorsement on the part of the editors, the *CRM* advisors and consultants, or the National Park Service. Send articles and correspondence to the Editor, *CRM*, U.S. Department of the Interior, National Park Service, Cultural Resources, 1849 C Street, NW, Suite 350NC, Washington, DC 20240; 202-343-8164, fax 202-343-5260; email: <ron_greenberg@nps.gov>.

Robert L. Spude

Mining History
A New Dialogue

While researching the Georgetown mining district of Colorado, I recently discovered information about the Red, White, and Blue Mining Company, an entrepreneurial enterprise made up of a group of ex-slaves from the Missouri lead regions. They had organized their own company, opened mines, and operated one of the first smelters in Colorado. A member of this mining company, metallurgist Lorenzo Bowman, became a locally recognized expert before his death in 1870. Archeological evidence of his operations on the headwaters of South Clear Creek is an important reminder of the African Americans who participated in the Pikes Peak rush.

When cultural resource management studies are conducted, we often forget that the story of mining is the story of people. Mining history is more than the physical presence of mines or mills. It is about new arrivals in a region, the creation of new towns, and the characteristic mining culture of boom and bust. It is about the mix of industrial workers of a region, the great cultural diversity, and the resulting social and political fabric. And, it is about the tale of innovators and entrepreneurs, opportunities and disappointments.

In this, the centennial celebratory year of the Klondike Gold Rush and the 150th year after the California gold discovery, we continue to study and re-interpret mining history and places. New parks, such as Virginia City State Park in Montana, provide further opportunities to explore additional themes; in this case, Chinese sojourners and the society that evolved in the isolated northern Rocky Mountains. Interpretation of mining sites, like many other historic places, has been influenced by the "New History," which looks at the broader story of our diverse culture. In my corner of the West, the prehistoric and Spanish-era turquoise mines near Cerrillos, New Mexico, are just as important as the more celebrated gold rush sites elsewhere.

However, the conservation, preservation, and management of mining sites are particularly problematic. In general, mining sites lasted only as long as profitable ore or coal was extracted; then they disappeared. Integrity of the resource will always complicate the search for historic mining sites. Over the past decade, the National Park Service has offered guidance for the survey, evaluation, and subsequent nomination of historic mining sites to the National Register of Historic Places. An increased awareness, partially because of the loss of mining-related properties in the West, has also facilitated the recognition of mines and mining-related sites for National Register designation and/or the initiation of serious preservation efforts.

Rare is the extant industrial plant or mill that once processed ores, either east or west. Preservation efforts have often been piecemeal—with some notable successes, such as the preservation of the Mayflower Mill near Silverton, Colorado. Preservation through documentation studies is too frequently the relied-upon method for recording at least some level of information about a historic mining site before the resource is lost. The Historic American Engineering Record has provided technical guidance and direction as well as conducted specific projects to record the mills and engineering works at idle mining sites.

Mitigation efforts for federal clean-up projects or new federally-permitted mining operations have resulted in many studies, especially archeological, of former mining camps and mine sites. As part of the mitigation for the loss of physical evidence of historic properties, mining companies or agencies have funded the archeological study or historical recordation of mining regions. Occasionally, the need to provide habitat for rare species, such as bats, has facilitated the preservation of mine works. This fortuitous overlap of natural resource management mandates with an identified cultural resource benefits both.

Nearly 10 years ago, the National Park Service co-sponsored a week-long conference at Death Valley National Park on the preservation of historic mining sites in response to a need for guidance on issues and policies, management and interpretation, National Register and inventory projects, and mitigation approaches for new mining operations or environmental clean-ups within historic areas.

Today, many of the issues raised at the conference have been addressed. However, mining history now needs new direction. There is a need for new points of view and historical methodologies. In particular, there exists a continued need for innovative guidance on preserving and protecting these fragile remains; a need for additional awareness about miners, prospectors, and countless other mining-related individuals; and a better understanding of the diversity of mining-related technologies and surviving historic resources within the national story. We hope this edition of *CRM* begins this new dialogue.

Robert L. Spude is Chief, Cultural Resources and National Register Program Services, NPS Intermountain Support Office, Santa Fe. He served as co-guest editor of this issue of CRM.

Patrick E. Martin

Industrial Archeology and Historic Mining Studies at Michigan Tech

Recent years have seen an increasing awareness and concern for industrial heritage in North America and internationally. Public and private interest in the rise of industrial society is readily visible in the creation of industry-focused national parks such as Saugus, Lowell, America's Industrial Heritage Project, Steamtown, Keweenaw National Historical Park, as well as state and community-recognized sites like Slater Mill, Sloss Furnace, Eckersley Village, and Fayette State Park.

Prominent among the sites and communities that highlight industrial heritage are the locations of former mining activities, both here and abroad. Interpretive efforts on major mining sites have been especially successful in Australia. Carefully designed and located interpretive signs combined with walking and driving tours provide important information to visitors at Broken Hill, Burra, Moonta, and Kapunda, among other sites. A major interpretive center at Sovereign Hill in the gold fields of Victoria is one of Austalia's most successful tourist attractions, drawing visitors to a carefully reconstructed, if not fully faithful and accurate, historic mining complex. Something of a cross between Disneyland and Williamsburg, the Sovereign Hill complex is an excellent representation of several stages of mining activity from an isolated tent camp to a fully developed village, complete with mills, machines, mollock heaps, steam engines, pubs, housing, and costumed interpreters.

In Cornwall, through the efforts of the Trevithick Trust and other organizations, the extensive mining history of the English countyside is being studied, preserved, and interpreted for the public. Engine houses for pumping and hoisting have been acquired and rehabilitated, interpretive centers have been housed in mining company buildings, and former mining tramways have been developed as interpretive trails linking key sites for walkers. These imaginative schemes preserve important elements of the mining landscape and allow visitors to appreciate their role in the history of the region.

In the United States, historic mining sites and lore occupy an important place in our collective memory and popular culture, whether it be stories of the Forty-Niners, coal mining in Appalachia, or gold prospecting in the Black Hills. Several states continue to base their identity on mining heritage, such as the Silver State of Nevada; the totemic Badgers of Wisconsin, referring to the badger-like diggings of early lead miners; or, the California state slogan, "Eureka!" The cultural and technological importance of mining ventures to our national development is reflected in these expressions of shared identity, even if the historic distribution of benefits was limited to investors and owners.

Few types of human habitation and enterprise generate such profound impacts on the landscape as mining operations. The scale of earth-moving, resource consumption, and environmental impact associated with mining generally exceeds that resulting from any other activity. The often rapid growth of communities devoted to the mining enterprise, the development and spread of distinctive cultural and technological forms, and the persistence of a "mining mentality" also attract attention and curiosity. In addition, the very notion of extracting essential and/or precious minerals from the bowels of the earth, working in perpetual darkness, and the attendant technologies for accomplishing these feats generate sincere interest at a basic emotional and humanistic level.

Scholarly interest in mining towns and landscapes has also penetrated the realm of social science. Several historians have focused their research inquiries on mining as an economic enterprise and, in recent decades, interest has extended into other disciplines. For example, the well-respected studies of Anthony Wallace on Pennsylvania coal mining towns demonstrates the analytical power of anthropological community studies. Archeologists have also been drawn to mining sites across the country because of both research interest and cultural resource management concerns. Identification and management of historic mining sites frequently arise when environmental evaluations are necessitated by federal or state-sponsored projects. Numerous studies have also been conducted by federal agency archeologists and/or private consultants on lands administered by agencies such as the Forest Service, the National Park Service, and the Bureau of Land Management, where pertinent data on historical significance are needed for short and long-term management plans.

Archeologists at Michigan Technological University began studying mining sites in the vicinity of the university in the mid-1980s. Michigan Tech, founded in 1885 as the Michigan

Mining School, is located in the midst of a nationally important copper mining district and near to extensive iron mining regions. Copper mining flourished from the 1840s until the 1960s, while iron mining is still active in the Lake Superior region. Michigan Tech has expanded into a comprehensive science and engineering university in the 20th century, but its surroundings and historic beginnings continue to provide an unparalled opportunity for studying former mining operations. The remnants of mining ventures litter the physical and social landscape. Mining-related machines, buildings, transportation systems, and waste deposits dominate the small communities that survive. The social structure of mining enterprises, with their rigid and hierarchical ranking systems, have left unmistakable traces in the housing stock and settlement patterns. Heavy dependence on immigrant labor also produced a diverse mix of ethnic and national minorities, a mix distinctively unlike other communities in the Midwest. Fortuitously, the mining school's focus during its early decades resulted in the gathering of an impressive collection of documentary records and resources related to mining, thus providing an especially rich source of insight into technological matters.

Michigan Tech's unique location and history have made it a convenient setting for the study of historic mining. Faculty in the Department of Social Sciences have taken advantage of the setting for several decades, dating at least to the mid-1960s, when the late Lawrence Rakestraw studied historic copper mines within Isle Royale National Park. In the late 1970s, archeology was added to the department's curriculum when Patrick and Susan Martin joined the faculty; the archeological examination of mining sites commenced almost immediately. For example, when the Ottawa National Forest initiated planning efforts for developing trail systems within the Ontonagon District, Patrick and Susan Martin carried out historical and archeological surveys that provided detailed information about the National Mine near the town of Rockland. Mining-related sites also composed a significant portion of the cultural resource database generated by Patrick and Susan Martin for the Cultural Resource Overview of the Ottawa National Forest, completed in 1979.

As Michigan Tech University's curriculum evolved during the 1970s and 1980s, the Department of Social Sciences developed a faculty focus on "Science, Technology and Society" as a unifying theme among the several disciplines represented (anthropology, history, geography, political science, and sociology). Adoption of this philosophical and methodological approach resulted in traditional American historians gradually being replaced by historians of technology, a shift that further encouraged study of historic mines and mining. As a result, Larry Lankton was hired shortly after he had led a Historic American Engineering Record team that had documented the Quincy Mining Company operation in Hancock. In the early 1990s, this departmental emphasis continued as a Master's degree program in Industrial Archaeology and was formally developed to take advantage of both faculty expertise and local opportunities for research. Establishment and expansion of the program resulted in the hiring of two additional full-time archeologists (Susan Martin and David Landon) and an architectural historian (Alison K. Hoagland) in order to complement the historians of technology (Larry Lankton, Terry Reynolds, and Bruce Seely) and the cultural anthropologists (Carol MacLennan and Josiah Heyman), whose interests focused on industry and work.

Archeological field school students documented a variety of mining-related site features in 1984 at the Quincy Mine near Hancock. While learning archeological methods and techniques, student crews recorded surface features, systematically collected artifacts from looters' backdirt piles, surface collected in plowed fields, and excavated test pits in a residential area associated with the mine. Patrick Martin and Larry Lankton also undertook a research project under contract with the Ottawa National Forest that year. This work intensively examined the Norwich Mine complex in Ontonagon County and involved documentary background and surface survey to guide decision-making for routing a major hiking trail through the mining site. Martin and Lankton documented several mining companies and their associated physical remains that were still visible within a square mile area. In addition, the research generated a National Register inventory-nomination for the site as well.

The Kennecot Mill, operated between 1908 and 1932, with glacial moraine and mountains in the background. Located within the Wrangell St. Elias National Park, Alaska, this site has been the focus of a cultural landscape study by Michigan Tech University and the National Park Service. Photo by the author.

In 1986, Michigan Tech University entered into a multi-year Cooperative Agreement with the National Park Service's Midwest Archeological Center to conduct archeological survey and evaluation of sites within Isle Royale National Park. University-based crews focused their attention on historical sites, particularly those related to copper mining on the Island. Several interesting sites were located and mapped; limited test excavations were also conducted at the Siskowit Mine. Particular attention was paid to mining sites that were previously known but incompletely understood. Documentary research preceded fieldwork, allowing for more thorough appreciation and interpretation of surface features. Michigan Tech University staff produced detailed maps that will continue to serve management and interpretive purposes in the future.

In the early 1990s, our attention returned to the Norwich Mine complex. The Ottawa National Forest was ready to develop their trail system and a new resident Forest Archaeologist was interested in partnering a Passport in Time project. After preparing a Cultural Resources Research and Management Plan, Michigan Tech University and the U.S. Forest Service collaboratively commenced two years of archeological investigation using industrial archeology graduate students, USFS employees, and numerous enthusiastic volunteers. Mapping and surface collection was the primary focus of early work, while later stages concentrated on archeological excavation. Crews discovered a

Geology National Historic Landmark Theme Study

The Geology National Historic Landmark Theme Study, under development by the National Park Service since 1990, focuses on the identification and evaluation of geology-related sites. Many are of major importance in the history of Economic Geology (Mining). The list of potential NHL sites includes the following:

ARKANSAS
Bauxite Mines, vicinity of Little Rock
Barite Mines, Hot Springs County
Crater State Park (Diamond Mine)
Novaculite Quarries (Quachita Mountains), Blanhard Springs

CONNECTICUT
Cheshire Barite Mines, Cheshire
Higley Copper Mine, East Granby
Hoadley Neck Quarry, Guilford
Jinny Hill Barite Mine, Cheshire
Old Newgate Prison Copper Mine, East Granby (NR)
Old Mine Park Archaeological Site, Trumbull (NR)
Ore Hill Iron Mine, Salisbury
Portland Brownstone Quarries, Portland
Strickland Quarry, Portland
Hale Pegmatite Quarry, Portland
Branchville Pegamite Quarry, Ridgefield

COLORADO
Rulison Project Site

GEORGIA
Soapstone Ridge, Dekalb (NR)

ILLINOIS
Lead Hill, Hardin County
Rose Hotel, Hardin County (NR)

IOWA
Mines of Spain, Dubuque County

LOUISIANA
Salt Mines and Offshore Oil Drilling Site (various locations)

MISSOURI
Meramec Spring Park, St. James
Schaperkoetter Clay Pit

NEW JERSEY
Bog Iron and Batso Village, Hammonton
Franklin-Sterling Hill Mineral District, Sussex County
Schuyler Copper Mine, Bergen County

OHIO
Samuel P. Hildreth House, Marietta

PENNSYLVANIA
Wyoming-Lackawanna Coal Field, Wilkes-Barre and Scranton

SOUTH DAKOTA
Homestake Gold Mine (part of the City of Lead Historic District), Rapid City (NR)

TENNESSEE
Iron, Mining and Furnace Sites (multiple properties) in Tennessee, South Carolina, North Carolina, Kentucky, and Alabama

UTAH
Bingham Canyon Open Pit Copper Mine

WISCONSIN
Mineral Point Hill, Iowa County (NR)
Neda Open Pit Mine, Dodge County
Pendarvis House, Mineral Point (NR)
Trimborn Quarry Site, Milwaukee County

Harry A. Butowsky
NPS Historian

(NR) denotes listing on the National Register of Historic Places.

number of important and interesting features including several structures associated with the various companies that had operated within the area. Field and archival studies identified and explored an 1840-1850s residential area as well as the milling facilities associated with the Ohio Trap Rock Mine. While excavating portions of the stamp mill, built to crush the basaltic bed rock and remove native metallic copper, the well-preserved remains of some unusual features were discovered. Two large wooden buddles, circular devices 8 to 10 meters in diameter, had been used to separate finely crushed rock from the copper particles. Buddles were common in the tin and copper mines of Cornwall, England, in the 18th and 19th century. This technology was evidently employed in the early stages of the site's mining development, but apparently did not work efficiently in the local situation. The unique characteristics of the ore bodies did not lend itself to this separation method and it was quickly abandoned. Prior to the discovery of these exceptional examples, no wooden buddles had been recognized elsewhere at any North American mining site. The accidental burial of the Ohio Trap Rock Mine buddles in copper-rich stamp wastes preserved them for 150 years, leaving them available for the unexpected discovery by Michigan Tech University archeologists. [For further information, see: "Archaeological Perspectives on the Diffusion of Technology: An Example from the Ohio Trap Rock Mine," (Landon and Tumberg 1996), *IA: Journal of the SIA*, 22(2): 41-57.]

A National Register-related project administered through the Michigan Historical Center produced an intensive survey of historic mining sites in a single Upper Peninsula County. Ontonagon County saw significant copper mining activity in the 19th and 20th centuries, including the last copper mine to operate in the area, the White Pine Mine, which ceased its operations only recently. While some sites were prominent and well known, many others had faded from both sight and memory and were obscure to land managers and decision makers. The need for a systematic survey was well recognized. Grant Day, a Michigan Tech University student, conducted the documentary and field survey under the faculty guidance of Susan Martin and Terry Reynolds. The well-researched final survey report, *Copper Mines and Mining in Ontonagon County, Michigan: An Intensive Level Survey of Historic Era Mining Sites* (Day 1996), was recognized with an award from the Michigan Historic Preservation Network as an outstanding contribution to the state's preservation efforts.

In 1997 Michigan Tech University entered into a Cooperative Agreement with the National Park Service's Alaska Regional Office to undertake cultural landscape studies on two mining complexes within the Wrangell St. Elias National Park. Working with archeologist Ann Worthington and landscape architect Cathy Gilbert of the National Park Service, Patrick Martin and graduate students Paul White and Will Updike initiated work at the famous Kennecott Mine and the nearby Bremner gold mining district. Inventory work by Michigan Tech University archeologists will supplement the extensive historical research and documentation that has been previously accumulated on Kennecott.

A perspective that emphasizes the physical nature of artifacts and structures and the integration of associated landscape features, and leavened with an understanding of mining and milling technologies, makes for a different level of interpretation than might be generated by a landscape architect or historian. The complexity of Kennecott's landscape and development, as well as the massive scale of the site makes for a challenging prospect, but an exciting one. The project combines traditional pedestrian survey and recording techniques with Geographic Information System technology for presentation and interpretation. The combination of an archeological approach with the perspectives of historians and landscape architects promises an interesting and informative product.

While historic mining is a major interest area, mining sites are not the only focus of the Industrial Archaeology program at Michigan Tech University. Student thesis research has also focused on a foundry in Alabama, worker housing in the Lake Superior mining district, a water-powered sawmill in Wisconsin, and an early Lake Superior lighthouse. Michigan Tech University's definition of industrial archeology has been established in a broad and inclusive way by its staff and students. But the study of mining sites, technologies, and communities promises to remain the core area of research in the near future. Of particular interest are comparative studies, using data and perspectives from Upper Michigan to illuminate mining sites and communities around the world.

Patrick E. Martin is Associate Professor of Archaeology and Director of Graduate Studies in Industrial Archaeology with the Department of Social Sciences at Michigan Technological University. He also serves as the Editor of IA, Journal of the Society for Industrial Archeology.

Edward B. Yarbrough

Quincy Mining Company Landscape in Keweenaw National Historical Park

The 102nd Congress established Keweenaw National Historical Park, Michigan, to preserve and interpret cultural resources "that relate to the story of copper on the Keweenaw Peninsula" (P.L. 102-543). The park is comprised of two units, the Quincy and Calumet units, created around two National Historic Landmark districts. Because the National Park Service does not currently own any property in either unit, the staff work with a cadre of private and public entities to accomplish its mandates.

At the Quincy Unit of the park, the Quincy Mine Hoist Association, Inc. has led preservation and interpretation efforts since its incorporation as a non-profit organization in 1961. The association has managed not only to stabilize and restore several of the primary buildings at the mine location, but to have even developed extensive interpretation including underground tours. The Quincy Mine Hoist Association, Inc. has won the *Award for Historical Excellence* from the American Society of Mechanical Engineers and the *Award of Merit* from the American Association for State and Local History for its interpretive efforts.

Down the hill in the Quincy Unit, the Quincy Smelting Works does not have, as yet, a preservation benefactor. Although still retaining a high degree of historic integrity, the poor condition of structures on the site unmistakably reflects the need for stabilization efforts in the near future.

On Quincy Hill, the landscape of the Quincy Mine Location stands seemingly ready to recommence mining operations. The cultural landscape of industrial mining dates back to 1846, just four years after the opening up of the "copper country" by treaty to European-American settlement. No other landscape better conveys the methods and materials used to extract copper, the district's primary resource. The largest steam hoist engine in the world, locomotives of the Quincy & Torch Lake Railroad, ore cars, man cars, and various industrial buildings are important components of a cultural landscape that has witnessed little material change since the first quarter of the 20th century.

The evolution of the landscape on Quincy Hill spans the 126 years following the company's 1846 establishment. Also known as "Old Reliable," the Quincy Mining Company was formed at the dawn of American copper mining in the district. The most formidable industrial structures at Quincy Mine Location date from the late-19th and early-20th centuries.

The cultural landscape of mining operations at the Pewabic Lode begins as you ascend Quincy Hill on US-41, which bisects the southern portion of the location. Substantial ruins and other archeological remains line both sides of the highway; company houses as well as the primary administrative building dominate the west side of the highway. The No. 2 shaft-rockhouse stands tall atop Quincy Hill and can be seen for miles around. Together with the soaring idler stand draped with heavy steel cable, the 1894 hoist house, and the 1917 hoist house, these prominent structures comprise the most important mining-related ensemble at the location. Other massive sandstone and brick structures, including the bath house, the machine shop, and the blacksmith shop, are interspersed among 1,200 acres of lightly vegetated open spaces. These structures once bustled with around-the-clock activity at the longest lasting copper mine in the district.

The relationship of the Quincy Mine Location to the Smelting Works is especially striking because of the dramatic 600 foot descent from the location to the smelter. The counter-weighted tram that once carried supplies, ore, and men has been partially reconstructed as a cog rail tram for the purpose of transporting visitors to an underground tour. Enroute the tram provides a commanding view of the historic City of Houghton, the waterway, and the undulating Northwoods interspersed by angular fields of small farms. The ultimate destination of the tram is a historic adit, a horizontal tunnel that intersects the 1860-era diggings on the seventh level of the mine, halfway down the hill to the smelting works. The adit also drains water from the mine and is used for technical mining education purposes by Michigan Technological University.

Housing and community services at the Quincy Mining Company site have also left their mark on the landscape. Near the cooling ponds and the 1917 hoist house, a representative company-built saltbox style house for workers and their families remains in stable condition. Near-identical worker housing, which stood next to and across the street from the surviving house, are gone. On the northwest side of US-41, many early company-built houses also exist. However, many are abandoned and are at considerable risk of collapse due to snow load, vandalism, or structural failure due to water infiltration. Additional housing built by the Quincy Mining Company or by the neighboring mines, which Quincy later acquired, exist beyond view from the core industrial area.

The Quincy Mining Company Smelting Works was built on the north shore of Portage Lake, now the southernmost portion of Keweenaw National Historical Park. Begun in 1898, the industrial complex exemplifies the industrial landscape of a turn-of-the-century smelting works. Amazingly, the Quincy Mining Company Smelting Works is the last surviving 19th-century copper smelting works still standing any were in the world.

From the iridescent black slag pile, connected by rail to the tightly knit cluster of industrial buildings at second and third floors, to the canal-side courtyard with piers from which copper ingots were once shipped to market, the smelting works retain remarkable historic integrity. The elevated rails, rail cars, and slag piles in relation to the industrial buildings continue to strongly suggest the complicated interaction of operation within the smelting works complex. Even many tools have survive *in situ*; giant ladles stand ready to once again pour molten copper into ingot molds. However, this resource is at risk. At present, the structural remains have been left to deteriorate. Severely damaged windows and roofs permit rain and snow to enter undermining the structural soundness of this historically important resource.

In 1860, the Quincy Mining company contracted out smelting to the Lake Superior Smelting Company, which was also located along Portage Lake. As the Quincy Mining Company prospered and expanded, the need for their own smelter became apparent. The initial action towards fulfilling this need was consultation with James Cooper in 1892, well known for his skills in smelting operations management. Five years later, in 1897, the Quincy Smelting Works was finally contracted to be designed and built. With a smelter of its own, the Quincy Mining Company could process copper ore at a considerably lower cost.

The copper ore mined from the top of the hill, where the Quincy mine hoist and shafthouse are located, was first transported to the stamp mill located on Torch Lake at Mason. The stamp mill was located so distant from the mine and the smelting works because of the availability of water needed for the stamp milling process and the ability to dump waste sand into Torch Lake, rather than into the narrow and heavily trafficked Portage Lake, which by the smelting works is shaped and was used like a busy canal. After the material was run through the stamp mill, it was hauled by railroad to the smelting works located on Portage Lake (Keweenaw Waterway).

The placement of buildings and tools at the smelting works correlates directly to the processes that copper refining required at the turn of the century. The ore was unloaded in the mineral house, which has a ramp leading to the second story where the railroad cars could easily be unloaded into the bins located on the first story of the building. The material was then sent to the furnace, resulting in a "matte" that contained 60-62% copper. A converter process then refined the solution to 99% pure copper. During these preliminary processes, limestone was added to the molten copper as flux in order to precipitate out the impurities, which could then be skimmed off the top of the molten copper. This "blister copper" was then sent to the refining furnace where a process called "rabbling" was used. After skimming off the remaining impurities, the copper was cast into ingots.

In 1931, low copper prices lead to the closure—but not the dissolution—of the Quincy Mining Company. Reopening in 1940 for war efforts, the smelting works was closed permanently in 1972.

The Quincy Smelting Works remains as integral a part of the Quincy National Historic Landmark and Keweenaw National Historical Park as it was to the longevity and success of the Quincy Mining Company. Certainly, the Smelting Works' arrangement around port and rail, its setting at the foot of Quincy Hill and dominance along the waterway, speak of an extremely valuable cultural resource, one that deserves a concerted preservation and interpretation effort. An informal consortium of local governments, the Quincy Mine Hoist Association, Inc., interested private parties, and Keweenaw National Historical Park is currently engaged in planning for the adaptive reuse of the Quincy Smelting Works.

Edward Yarbrough is writing the Historic Resource Study for Keweenaw National Historical Park.

Eric L. Clements

Interpretation at the Western Museum of Mining and Industry

The Western Museum of Mining and Industry's celebrity burros, Polly and Molly, function as living reminders to museum visitors of the historic character of frontier mining.

Founded in 1970, the Western Museum of Mining and Industry interprets the history of, and current developments in, mining in the western United States. The museum is located opposite the north entrance to the U.S. Air Force Academy on Interstate 25, an hour south of Denver and twenty minutes north of Colorado Springs.

The museum contains over 15,000 feet of exhibit space in its main building and numerous other exhibits on a 27-acre site. Structures on the property include a ten-stamp mill, two hoist houses, a blacksmith shop, two historic barns, and headframes from the Orpha May and Elkton mines in the Cripple Creek District. Large-scale artifacts on the museum grounds include a steam shovel, two tram engines, a steam stamp, a walking beam engine, and a replica of an arastra.

Staff members take pride in the fact that most of the machinery at the Western Museum of Mining and Industry remains in operating condition. Everything from a 35-ton, reciprocating, double-expansion Corliss steam engine, to a pump, generators, a tram engine, and a pneumatic drill are operated daily on the museum's guided tours. The steam shovel and stamp mill are operated on special occasions. Nothing quite so capably demonstrates the thunderous roar made by a pneumatic drill as the thunderous roar made by a pneumatic drill.

Given the significant expense of transporting heavy machinery, the original provenance for most of the museum's artifacts is the state of Colorado; however, the museum collection has historic material acquired from throughout the country. For instance, the museum's Corliss engine provided power for a paper mill in West Groton, Massachusetts, before being donated to the museum. The museum also displays a 50-kilowatt generator which served a mine and smelter site at Tooele, Utah, and and an 80-ton Nordberg steam stamp from the Osceola Mill on Michigan's Keweenaw Peninsula. A small bar salvaged from a saloon in Hachita, New Mexico, permits the museum to interpret leisure activities within a mining community.

The museum's collection presently includes over 3,400 artifacts ranging from the previously described giant engines down to the personal equipment and effects of miners and their families. The museum also has a significant research library of around 12,000 volumes, the strength of which is its numerous contemporary equipment catalogs and original treatises on mining and milling. We even have two burros, a fixture of the mining frontier, who grace the pasture at the front of the property. Polly and Molly were donated to the museum in 1979 and have become local celebrities during their tenure. Indeed, they are an important point of contact between the museum and the surrounding community.

To help reconcile the objectives of curators (preservation) and educators (display and demonstration), the museum has three distinct artifact collections. The *permanent collection* contains the museum's best and most complete artifacts and is used solely for exhibition and research. The *education collection* contains duplicates of material in the permanent collection as well as modern reproductions. Artifacts in the education collection can be used for demonstrations or hands-on displays, accepting the risks of deterioration and damage inherent in these activities. The *parts collection* contains the various parts used to keep the museum's many machines in running order.

Perhaps the museum's best example of balancing preservation and education-through-demonstration occurs at our ten-stamp mill. While the mill itself is a modern replica built from a 19th-century design, the artifacts contained therein are originals salvaged from the abandoned Yellowjacket Mill at Montezuma in Summit County, Colorado. Our "Yellowjacket II" provides the museum staff with the unusual opportunity to demonstrate stamp milling in classes and to the visiting public, but also the responsibility to preserve these now rare industrial artifacts. We compromise by never operating one of the five-stamp

mortar boxes and only running the other one a few times a year.

The staff uses the museum's artifacts to tell the story of mining in the West with narrative text, audio tape tours, and most importantly, through guided tours. The museum hosts around 40,000 visitors annually and about a quarter of these are students. School groups range from pre-school to college classes, but as Colorado history is generally taught in the fourth grade, that age predominates. Guided tours consist of three elements, which can be adjusted to meet the interests of a particular group. On the first part of the guided tour, we discuss and operate the four large steam engines which are located in the museum's lobby. These include the Corliss engine, two generators, and a displacement pump. Two of these impressive machines operated at mine sites and the other two represent types which did. During this part of the tour, the guide explains to the visitors how these engines worked, the purposes for which they were used, and details some of the social history linked to these machines.

Following the engine demonstrations, guests are directed to the museum's theater for a video entitled *Mining in the West*. This program covers the bonanza period of mining in the American West (1849-1904). Like the museum generally, the video focuses less on the mining magnates and more on the prospectors, miners, and other residents of the mining districts.

The final aspect of the guided tour consists of an escorted walk through our placer mining, lode mining, assaying and milling exhibits. Museum guides illustrate the work of the miners through demonstrations of panning and hand-steel drilling, and by operating a tram engine, a vintage air compressor, a hoisting engine, and a pneumatic drill.

The Western Museum of Mining and Industry offers regular hands-on classes in stamp milling, fire assaying, and blacksmithing. Shown here are participants experiencing loading ore into the museum's operating stamp mill.

The lode-mining portion of the tour concludes in a drift reconstruction, where the guides run the drill, describe the processes of mucking, drilling and blasting, and conclude by lighting pieces of fuse. The guided tour ends with a demonstration of the stamp milling process through use of an operating model.

During this part of the tour, the guides have another chance to discuss frontier social and labor history and mining health and safety issues, and to impress upon visitors the industrial nature of frontier mining. While many people come to the museum with romantic notions about the bonanza West, we demonstrate that from very early on western mining was a heavy-industrial enterprise. Our mine office display, which highlights geologists, surveyors, engineers and accountants—the middle echelon responsible for melding the magnates' capital and the miners' labor into a profitable lode mine—best illustrates this idea.

Another point about which most people are astonishingly ignorant is the degree to which they are dependent upon mined products. Any argument in favor of banning mining is, of course, specious, because absolutely everything which humans produce, use, and consume is derived either directly or indirectly from mining. The question thus becomes not whether to mine, but where and when and how to mine. The museum communicates this important idea through both its long-term and temporary exhibits.

The museum uses several approaches for interpreting mining history off museum grounds. Our outreach programs include a prospector's trunk; and the museum staff has recently developed an outreach kit, which we are taking to area schools. Through these kits, children unable to come to the museum for a tour can still have an entertaining and educational time learning about the history and present significance of mining. The museum also reaches older audiences off-site with slide lectures, which we present to service clubs and civic groups.

Through these diverse approaches, the Western Museum of Mining and Industry interprets the history of the mining West and reminds Colorado residents and visitors alike of the importance of mining to the western states, the nation, and the world today.

Eric L. Clements, Ph.D., is Education Director at the Western Museum of Mining and Industry. He is the author of several articles on mining history and gives frequent lectures on mining subjects.

Canada Post Celebrates the Canadian Institute of Mining, Metallurgy and Petroleum Centennial with Stamp

Helping to shape Canada quite literally from the ground up, the discovery of Canada's underground natural resources has played a significant role in Canada's development for almost three centuries. The Honourable André Ouellet, Chairman of the Board of Directors for Canada Post, announced that on May 4, the Corporation released a single stamp to honour the 100th anniversary of the Canadian Institute of Mining, Metallurgy and Petroleum.

The stamp was designed by Monique Dufour and Sophie Lafortune of Ouebec, using layered photographs of equipment common to the honoured industries. A cutting wheel (from Tamrock Canada of Lively, Ontario just north of Sudbury), used in mining to break new ground, appears in the stamp's upper left corner. The impressive image of the Hibernia platform off the coast of Newfoundland (courtesy of the government of Newfoundland) is depicted in the lower left corner. The right side of the stamp features an image of a smelter (or high temperature furnace) used in the production of minerals. A silhouette of a pick axe, the archetypal miner's tool, is overlaid across the three images. The stamps are available in panes of 20, with five minerals depicted along the bottom of the full sheet.

The Canadian Institute of Mining, Metallurgy and Petroleum (CIM) began as an amalgamation of provincial mining associations and was incorporated by act of parliament in March of 1898 as the Canadian Mining Institute (the name was changed to recognize metallurgy in 1970 and petroleum in 1990). Among the CIM's early achievements were the successful blocking of an export tax on the copper-nickel of Sudbury, the reduction of royalty on Yukon gold from 10% to 2.5%, the reformation of Quebec's mining regulations and a movement for a federal department of mines.

The organization is Canada's leading technical association of minerals, metals, materials and energy professionals, with more than 12,000 national members working in the industry, government, and academia. In addition, more than 10,000 local members can be found in branches and sections throughout the country, along with more than 200 corporate members. The CIM has 16 technical societies, divisions, and committees which conduct studies, publish technical papers, arrange conferences, meetings and courses, and liaison with government departments.

The Official First Day Cover carries a Montreal, Quebec, cancellation mark. The envelope's cachet depicts a head-and-shoulders image of a miner in full gear. The image is part of a statue, *Miners Sculpture*, which is located at the entrance of the Northern History in Kirkland Lake Ontario.

Stamps and First Day Covers are available at participating postal outlets, or by mail order from the National Philatelic Centre. From Canada and the USA, call toll-free: 1-800-565-4362, and from other countries call: (902) 863-6550.

Elia Anoia
Media Relations
Canada Post Corporation

Bruce J. Noble, Jr.

Reflections on Previous Ruminations

Some Thoughts about Mining Site Eligibility and National Register Bulletin 42

My personal experience with historic mining resources is something of an odyssey. My interest was awakened during the summer of 1983, when I worked in an old mining town that was operated as a historic site by the State of Wyoming. A few years later, I relocated to Washington, DC, to work at the National Register of Historic Places. In this position, I remained very involved with historic mining issues through consultation with state historic preservation offices and other interested parties who were grappling with the complexities of nominating mining resources to the National Register. My involvement at a historic mining conference (Death Valley 1989) further refined my interest in mining site eligibility issues. This work culminated in 1992 with the publication of a National Register bulletin on historic mining resources, which I co-authored with Robert Spude.[1]

However, my current employment at Harpers Ferry National Historical Park has left me less involved with historic mining concerns. As I reflect on my previous work in this area, I find myself pondering two questions. First, did the National Register bulletin prove to be useful? Second, was the methodology contained in the bulletin based on sound principles? While my answers to these questions may lack a certain degree of objectivity, I do have some thoughts on both questions.

If the usefulness of a bulletin can be measured by the number of National Register listings which followed its publication, then this particular bulletin has not met with resounding success. Utilizing statistics supplied from the National Register computer database, I calculate that 21 historic mining properties were listed on the National Register between 1993 and early 1998. The nominations for these properties originated from 11 different states, six located to the west of the Mississippi River and five to the east. These nominations include 13 historic districts, while nine properties were nominated in connection with multiple property submissions. The geographic spread of these mining-related sites is encouraging.[2] The use of the National Park Service's multiple property nomination format and the number of historic districts also suggests that mining properties are being considered holistically, rather than as unique, technological sites. Beyond these signs of good news, it must be acknowledged that the influx of mining properties to the National Register that followed the publication of *Bulletin 42* in 1992 has been rather modest.

Having said that, I would also state that gross numbers are not the final measure of success for a National Register bulletin. As much as anything, National Register bulletins seek to draw attention to property types that have previously received insufficient recognition. An excellent example would be the bulletin issued with respect to traditional cultural properties, which has had significant consequence through its affirmation that sites of cultural value to indigenous peoples must receive professional consideration in the cultural resource management process.[3] Despite its unmistakable success, this bulletin has generated very few nominations of traditional cultural properties to the National Register. Likewise, I would hope that the value of the bulletin on historic mining resources would not be measured solely by the number of National Register listings that followed its publication. I like to think that the bulletin has increased awareness of the importance of mining resources and has helped to clarify the efforts of those attempting to nominate mining-related sites.

While the usefulness of the bulletin may be in the eye of the beholder, I continue to believe in the overall value of the bulletin's methodology. *Bulletin 42* emphasizes two fundamental points. First, because mining properties are generally located in harsh environments that have taken a toll on their historic fabric over the decades, integrity can be a problematic factor. The few crumbling structures that may remain at a historic mining site today can not be properly evaluated by simply falling back on the seven aspects of integrity[4] that are traditionally applied to historic buildings. The bulletin suggests that individuals evaluating mining resources of questionable integrity should ask whether surviving mining-related features are part of an interrelated "system." In other words, a toppled head frame may appear to lack integrity as an individual structure, but it might potentially retain sufficient integrity as an integral component of a mining system that includes extraction facilities and transportation links to a refining operation.

Bulletin 42 makes a second contribution by suggesting that the significance of intact "mining systems" should be based in part on whether the resource can be "interpreted." If a single dilapidated component of a mining operation exists as part of a larger system that can be viewed as an integrated working process and interpreted as such to the public, then it is likely to possess both integrity and significance. Integrity must be demonstrated in terms that the National Register staff will accept, but *Bulletin 42* provides further guidance in applying the integrity standards to resources that do not fit the traditional evaluation process for architecturally significant buildings.

The related concepts of envisioning individual components as parts of a larger interrelated system and asking whether the system *in toto* can be interpreted has relevance to the evaluation of a broad range of industrial resources. I have certainly found this to be true with respect to my recent responsibilities for interpretation and cultural resources management at Harpers Ferry National Historical Park. For instance, the park contains an early-19th-century industrial area known as Virginius Island. The small water-powered factories located on this island became increasingly less relevant over time as they were surpassed by more modern manufacturing technologies and frequently inundated by the very waters that powered them. By the time that the park was created in 1944, most of these industrial buildings had been damaged to the extent that only a few foundations remained on the island.

Recent floods have continued to hammer away at these fragile resources. This was especially true in 1996, when two severe floods pounded the island. Afterward, park managers had to decide whether to spend limited emergency funding to repair resources that would, after all, be impacted by further flooding in the future. At this stage, thoughts about the existence of "interpretable systems" came into play. Put more plainly, the island contains historic intake arches, which channeled water into an early canal system. As originally designed, the canals eventually arrived at a set of tapering tunnels that concentrated the water and discharged it with sufficient force to turn turbines in a cotton factory constructed in 1847-1848. After the 1996 floods, the intake arches were on the verge of collapsing, the tunnels were entirely filled with silt, and the cotton factory had been reduced to a set of ruins that could be completely destroyed by the next flood. Despite this apparent level of degradation, the complete system was still intact to the point that it could be meaningfully interpreted to the visiting public. This observation resulted in the pragmatic and defensible decision to stabilize the various components of this important hydropower system to enable it to better withstand future flooding.

I would not want to go too far in attributing the historic mining bulletin as the primary impetus for viewing cultural resources as parts of larger systems that may be interpreted to the public. The tendency to look beyond individual structures and to evaluate resources more holistically has become increasingly prevalent within the preservation and archeological communities in recent years. This positive trend is readily observed in the increasing attention that is now being paid to cultural landscapes and historic archeological complexes. I believe it is safe to say that *Bulletin 42* is a practical application of this larger trend. To the extent that these tendencies are used in an evaluative approach that helps to clarify the process for nominating mining-related properties, I can remain comfortable in extolling the professional merits of the National Register mining bulletin.

Notes

1. For additional information, see Bruce J. Noble, Jr., A National Register Perspective: Evaluating Historic Mining Resources, *CRM*, volume 12, number 2 (1989); Leo R. Barker and Ann E. Huston, eds., *Death Valley to Deadwood; Kennecott to Cripple Creek: Proceedings of the Historic Mining Conference, January 23-27, 1989* (National Park Service 1990); and, Bruce J. Noble, Jr., and Robert Spude, *National Register Bulletin 42: Guidelines for Identifying, Evaluating and Registering Historic Mining Properties* (National Park Service 1992).
2. Some comments on early drafts of the bulletin suggested that it would be less relevant for Eastern mining properties. While the listings that have taken place since 1992 might suggest otherwise, I do feel that another National Register bulletin more directly oriented to mining in the East would be appropriate.
3. See *National Register Bulletin 38: Guidelines for Evaluating and Documenting Traditional Cultural Properties* (National Park Service 1990).
4. The seven aspects of integrity are setting, location, association, materials, design, feeling, and workmanship.

Bruce J. Noble, Jr., is a historian and Chief of Interpretation & CRM at Harpers Ferry National Historical Park in West Virginia.

David A. Poirier and Mary G. Harper

Newgate Prison and Copper Mine

The Newgate Prison and Copper Mine is a state-administered historic museum complex located in rural East Granby, Connecticut. The historic significance of the Newgate copper mine has been recognized by the National Park Service and the American Society of Mechanical Engineers with respective historic national landmark designations.

Newgate began as one of the earliest attempts at large-scale copper mining in the country. Copper ore was discovered at the site in 1705. Two years later, the copper mining venture became the first chartered mine in the country. Construction of the mine was hampered by disputes among the 64 proprietors until 1712, when the mine was leased for 30 years to a small partnership organized by Thomas Belcher. By 1742, when the lease expired, the mining efforts had failed to turn a profit. Further operations ceased in the mid-18th century when the accessible higher-grade ore had been exhausted.

Subsequent to the initial mining operations, the colony of Connecticut acquired the property as a place of confinement for prisoners; a primary assumption was that productive mining could be achieved by the prisoners in order to defray the expense of their confinement. In 1776, Newgate Prison became the nation's first state prison. Newgate was initially a prison-without-walls; the below-ground mine was used to house the prisoners. Almost as soon as it was established, the prison was plagued by escapes as inmates overpowered the few guard and miners. The frame guardhouse was burned by the prisoners in 1777. The facility was temporarily abandoned until 1780, when a new frame structure was erected and prisoners returned to the site. However, the mining operation did not resume, because the state's attempt to reactivate the mining operation with prison labor proved uneconomical.

Like copper mining, nailmaking proved unprofitable. The state of Connecticut embarked on a series of prisoner industries in an effort to make the prison self-sufficient. Cooper, cabinet, shoe, and wagon shops were added and a man-powered treadmill for grinding grain was installed in 1824 within a new four-story stone cell-block. All of the prisoner-produced commodities were sold to the public, which visited the facility in fairly large numbers. However, these diverse industries could not offset expenses and Newgate Prison was finally abandoned in 1827; the incarcerated were transferred to a new state prison in Wethersfield, Connecticut.

In the 19th century, several independent and unsuccessful attempts to mine copper occurred at Newgate; most notable was the Phoenix Mine Company's 1831-1836 struggle to revive the mining operation with newer technology and steam engines. These ventures proved financial disasters because of the ever-decreasing quality of high grade ore and technical difficulties with its refinement. Phoenix's last known mining operation ceased in 1836, probably the last time some of the mine workings were dewatered.

The property, thereafter privately owned, eventually became a well-known tourist destination in the early 20th century. The evocative ruins of the prison's structures, the expansive vista of the rural Connecticut countryside, the challenging descent into the mine's abandoned tunnels, and the hurly-burly collection of caged bears and peacocks, military tanks, and other exotic attractions ensured numerous visitors in search of an interesting summer or fall outing.

Concerned about the ever-increasing deterioration of the above-ground prison structures and the historic importance of the mining-prison complex, the state of Connecticut re-acquired the property in 1968. The property has since been administered by the Connecticut Historical Commission as a state historic museum.

The early 20th-century tourist attractions have been removed, a small visitor's center constructed, and stabilization has been undertaken of extant prison-related structures. Extensive archival research has documented the names, respective

Wooden ore cart rests in situ. This artifact was discovered as a result of the University of Connecticut's geological investigations of flooded tunnels at the Newgate copper mine.

crimes and duration of sentence, and typical daily rations for those incarcerated at Newgate. In addition, the general layout, function, and construction chronology of prison-related structures has been fairly well ascertained. Extant prison documents and the emotive image of prisoners huddled belowground with only torchlight and straw bedding have combined to facilitate an interpretative focus on the half-century of prison use of this remarkable site. By comparison, the early-18th- and mid-19th-century copper mining operations have become an interpretive postscript. The mines are viewed first and foremost as a place of confinement for personalizing the daily lives of Connecticut's late-18th-century prison population.

However, geoarcheological and archeological research may provide important new data for subtly re-focusing the on-site interpretive programs to include the history of mining at Newgate. In 1986, the University of Connecticut's Department of Geology's interest in the water transmissive properties of the mine's Mesozoic sedimentary bedrock resulted in the dewatering of that portion of the mine's underground workings that had been flooded since the final 1830s mining operations. Pumping continuously for 36 hours, the submersible pump drained approximately 127,000 gallons of water and lowered the mine's water table by 3.8 meters. Because the water's weight provided an equilibrium balance for several unstable wooden structures that retained tailings from 19th-century mine-related work areas (audible sounds of movement were noted), the submerged tunnels were not totally dewatered. Nonetheless, this unique opportunity confirmed that the extent of the flooded area does not differ measurably from an 1831 map, indicating that the 19th-century efforts did not remove substantial quantities of ore. In addition, concurrent archeological investigations documented the existence of a one-plank-wide wooden walkway down the center of the dewatered tunnel, several wood plank structures for retaining waste tailings, a sledge hammer, and a remarkably preserved wooden hand ore cart that had been placed in a niche in the sidewall of the dewatered tunnel. Due to conservation concerns, the artifacts were retained *in situ* and were subsequently re-submerged as the area gradually reflooded.

The Connecticut Historical Commission recently contracted with the Public Archaeology Survey Team Inc. in order to clarify areas of archeological sensitivity, provide professional guidance concerning the agency's day-to-day operations, and further enhance on-site interpretation of historic structures including subsurface mining remains at the Newgate complex. Research has commenced with the re-analysis of the Historical Commission's extensive collection of primary and secondary records as well as the initiation of extensive new archival studies, particularly the extant records of the Phoenix Mining Company.

Primary goals of the ongoing archeological investigations, the first ever undertaken at Newgate, are the refinement of the site's complex chronology and the identification of historic structures and archeological features associated with the property's multiple use for mining, ore processing, prisoner confinement, and private entrepreneurship. Comparative research on contemporaneous mining operations and prison systems will help establish an appropriate historic context and will provide information for interpretation of archeological remains at Newgate.

Results from preliminary archeological field testing has been encouraging. The extant network of underground tunnels have been more precisely mapped; drill holes are being carefully examined in hopes of determining the sequence of mine operations at the site. Archeological excavations have revealed an extraordinarily complex stratigraphy, which clearly indicates that a markedly different landscape existed historically in contrast with today's virtually flat "prison yard." Areas that for years had been presumed to be underlain with mine tailings yielded no evidence of mine waste at all. Conversely, areas traditionally identified as former prison building locations, such as the nailmaking shop, were discovered to consist of several feet of fist-sized, loosely packed mine tailings. Preliminary analysis of recovered materials suggests that some minimal level of on-site smelting occurred. Eighteenth-century burn layers have been identified, which allows for the potential correlation of particular locations and structures with historically documented prisoner uprisings.

The ongoing research is providing an improved framework for re-interpretation at this national landmark. Newgate was a national leader in both mining and prison development and, hopefully, the ongoing archeological, historical, and geological investigations will have relevance for similarly complex sites across the country.

David A. Poirier is Staff Archaeologist and Environmental Review Coordinator for the Connecticut Historical Commission (State Historic Preservation Office). He served as co-guest editor of this issue of CRM.

Mary G. Harper is Director of the Public Archaeology Survey Team Inc. and a Research Associate at the University of Connecticut (Storrs).

The opinions expressed here are those of the authors and do not necessarily reflect the views of the Connecticut Historical Commission.

Dianne Ingram and Doug Stover

Historic Mines of Chesapeake & Ohio Canal National Historical Park

The Chesapeake and Ohio Canal National Historical Park stretches 184.5 miles along the Potomac River in Maryland from Washington, DC, to Cumberland, Maryland. The park contains 4 quarries, 3 mine systems, and 13 natural caves. Limestone, marble, and Seneca sandstone were quarried for use in the construction of the canal, which was in operation 1828-1924. Gold mining was also an important enterprise along the canal. Today, these geologic features provide habitat for wildlife such as, bats and endemic aquatic invertebrates. This article focuses on the historic association of the quarries and mines and their related natural resources of the Chesapeake and Ohio Canal.

Gold Mining

Gold mining in the Great Falls area of Maryland began about 1867, shortly after its discovery near Washington, DC, during the Civil War. A 100-foot mining shaft is located near the present intersection of Falls Road and MacArthur Boulevard and is known as the Maryland Mine. The whole system is called the Great Falls gold mines and consists of two separate mines, the Maryland Mine and the Ford Mine, each containing several shafts. Most of the underground development and production in these mines, now on federal park land, took place between 1915 and 1940, after a company acquired 2,100 acres which included most of the known gold vein systems. Mining operations in the area ceased in 1940, with incidental prospecting and minor production occurring through 1951. Altogether, the mines around Great Falls produced the majority of the 5,000 ounces of gold from Maryland throughout the whole mining period. In 1940, miners were paid $1,200 per ounce of gold.

Remaining cultural resources associated with the Great Falls gold mines include the remains of the Ford Mine that collapsed in 1890 and the three shafts of the Maryland Mine. The two most recent shafts, 135 and 210 feet deep respectively, are plugged and are within a fenced enclosure closed to the public.

Quarry Mining

Upriver from the Great Falls gold mines lies the Seneca Mill located near Seneca, Maryland. The stone cutting mill was associated with the canal and it operated from about 1850 to around the early 1900s. The red and gray sandstone milled here was used in many of our nation's most prominent buildings such as, the Smithsonian Castle and the White House. The sandstone cut in the mill was quarried along the canal, as was marble from sites near White's Ferry, Maryland, and at Cedar Point Quarry near Violettes Lock.

Also along the canal near Dickerson, Maryland, lies the Frederick limestone breccia, also called Potomac breccia, calico marble, and Potomac marble. These high quality stones, mined from this vicinity, were first used in the rotunda pillars of our nation's Capitol.

Limestone Mining

An important limestone mining operation along the Chesapeake and Ohio Canal was located on Round Top Hill which rises over 1,300 feet above the Potomac River near Hancock, Maryland. The limestone was mined from seven primary mine openings and was used for making natural cement for the masonry structures of the canal. Round Top Hill Cement Mill, located just below the cliffs, was in operation from 1837 to the early 1900s. Some of the mines probably originated as natural cave openings into the Tonoloway Limestone. The largest mine in the Round Top system has 500 feet of passage and is 20 to 50 feet high. Today, three of the mine openings lie within Chesapeake and Ohio Canal National Historical Park, with the remaining mines located on adjacent State of Maryland land.

1890s photo of Seneca Quarry workers.

1906 explosion at Great Falls Gold Mines.

Portions of the cement mill ruins are still standing such as, the chimney, kilns, and structure walls.

The Round Top Mines are also important for another reason; the mines are providing habitat for hibernating bats. Three species, Big brown bat, Little brown bat and Eastern pipistrelle, currently hibernate here. In the past, researchers have recorded three other bat species in the area, including the Indiana bat (a federal endangered species), the Eastern small-footed bat (former candidate for federal listing), and the Keen's Myotis (declining in the Northeast). Additionally, six rare aquatic cave invertebrates have been recorded, including two isopods and an amphipod known only to occur in these mines plus troglobytic (cave-adapted) spiders and springtails of unknown species.

Vandalism, destruction of wildlife, and pilfering of historic artifacts have been documented from the Round Top Mines. For example, 11 Eastern pipistrelles were found shot in one of the state-owned mines in 1993 just 50 feet from the park boundary. There is also potential danger to humans from rockfall, unstable footing, and flooded areas in the mines. For these reasons, Chesapeake and Ohio Canal National Historical Park decided to close the three park mines.

Bat gates were installed in the entrances of these mines in July 1994. Roy Powers, from Mountain Empire Community College, designed bat-compatible gates for National Park Service resource managers in order to effectively prohibit human access to sensitive or hazardous caves or mines, while at the same time encouraging movements of wildlife or natural air flows. The specific "bat-friendly" features of the gates include 5-inch vertical spacing between the horizontal bars, providing enough room for bats to fly in and out, but not enough space for humans to squeeze through. [It should be noted that Burghardt (1996) recommends that four-inch vertical spacing be maintained between bars on the lower part of the gate to preclude very small children from gaining entry.] Heavy-duty anchoring and construction and a dual locking system all work to deter persistent vandals. Two of the Chesapeake and Ohio Canal owned mines were fitted with doors and special locks that allow authorized people to enter for resource studies or other appropriate reasons. One mine known not to contain resources was permanently closed. The State of Maryland plans to also gate the mines that are under its jurisdiction this summer.

Bat count data was collected by Fisher and Fisher (1998) in the Round Top mines before and after the bat-compatible gate installation to help evaluate any changes in the hibernating bat population. The four state-owned mines remained ungated throughout the data collection period (1994-1997); the three National Park Service-owned mines were gated in July 1994. Overall bat populations remained stable and no change in the number of bats using the gated or ungated mines was detected. However, a decline in the number of Eastern pipistrelles using Round Top was noted in 1996-1997, which was consistent with other counts in the region. A new bat count conducted in the Round Top mines in February 1998, indicates that the number of pipistrelles has returned to normal.

References:

Fisher, J.C. and Judy Fisher, 1998, *Round Top Mine Survey Final Report 1997*, Chesapeake and Ohio Canal National Historical Park.

Burghardt, John E., 1996, *Bat-compatible Closures of Abandoned Underground Mines in National Park System Units*, National Park Service, Geologic Resources Division.

Dianne Ingram is a Natural Resources Management Specialist at Chesapeake and Ohio Canal National Park, Sharpsburg, Maryland. Her job entails natural resource issues such as, natural resource inventories, wetlands monitoring, and agricultural leasing. She can be reached at 301-842-3279 phone, 301-842-3224 fax, email: Dianne_K._Ingram@nps.gov.

Doug Stover is the Chief of Cultural Resources Branch at Chesapeake and Ohio Canal National Historical Park, Sharpsburg, Maryland. He oversees the Branch's management of 1,276 historic structures, mines, museum collections, cultural landscapes, and archeology. He can be reached at 301-739-4200 phone, 301-714-2232 fax, email: Doug_Stover@nps.gov.

Inés Herrera and Rina Ortiz

Mexican Mining Heritage
The Real Del Monte Site

Mining is present throughout Mexican history. From the early colonial period to the present, thousands of mines were discovered and worked; for centuries Mexico ranked first in the world in silver production. Around the mines arose settlements. Some of the richest veins sustained important and opulent cities like Guanajuato, Taxco, or Zacatecas, which later developed other economic activities that permitted their subsistence after mining declined. However, most mining towns did not survive; a common fate of settlements associated with a hazardous industry. In spite of the importance of mining, few sites retain the atmosphere of this activity. We can see the traces of the historical development of mining in just a few of them. One of these sites is Real del Monte.

Real del Monte is located in the State of Hidalgo, 100 kilometers north from Mexico City. The site belongs to an ancient and rich mineral region in the Pachuca mountain range. The discovery of silver deposits in 1552 gave rise to four settlements: Real de Tlaulilpa (later Pachuca), Real del Monte, Atotonilco el Chico, and Real de Arriba.[1] Very soon the richness of the veins differentiated these four places. In 1554, in Pachuca was discovered a new method of silver reduction, called the "patio" process,[2] which made possible the extension of the works. At the beginning, Pachuca took the lead in silver production followed by Real del Monte, while the history of the two other places was more unstable and less successful.

The mining history of Real del Monte goes back for centuries. Some archeological findings demonstrate that natives carried out works at a superficial level before the conquest of Mexico.[3] But the shape of the town began with the exploitation of mines in the 16th century, this original urban organization was the basis of the later evolution. Mining activity was the main structure upon which it developed, up to now.

The way the town is laid out is clearly associated with the silver mining industry. Real del Monte developed around the mine in an irregular fashion. Mining gave the town its character and this is the basis for reconstructing the social, political and architectural history of the town. Real del Monte has become a national historical monument due to its centennial mining buildings. We have to point out that it is part of a wider region formed by the mines and reduction establishments.

The history of Real del Monte in the 17th century is practically unknown because of the scarcity of sources. Some authors state that, like in other regions, the silver production declined as a result of the Indian demographic catastrophe, the lack of capital, and technological problems related to the depth of mines. Based on new information, other scholars consider that decline was not absolute. They propose that there were periods of bonanza followed by periods of depression, but that does not mean that production was completely paralyzed. This seems to be the probable situation, since in 1697 when the Italian traveler Gemeli Carreri visited Real del Monte he found flourishing mines and a town of adobe houses with a population of 12,000 inhabitants.[4] But already by this time, it was clear that the main problem for the exploitation of the mines was drainage; to solve it required considerable investment, nonexistent at that time.

Real del Monte boomed in the second half of the 18th century. It was caused by the construction of a tunnel intended for the drainage of the mines. José Alejandro Bustamante y Bustillo started the work in 1739,[5] but after two years he could not afford the expenses so he formed a company with Manuel Romero de Terreros, a wealthy merchant. By 1750 when Bustamante died, the tunnel was not finished, so his partner continued the task. The tunnel was completed in 1762. For the next 20 years, Romero de Terreros obtained a profit of 10 million pesos. To this success contributed other factors: the ability of Romero in using his political links to concentrate mining property and the simultaneous development of other activities to support mining. Romero de Terreros concentrated in his hands not only mines, but also ownership of the main refining establishments (haciendas de beneficio) and agricultural estates. This contributed to the formation of an agro-mining complex that left its imprint on the landscape.

Before we refer to the structures left from this period, we would like to emphasize that since then the presence of a big company prevailed in local mining. Mining and refining were concentrated in

a few hands. In 1824, the English Company of the Adventurers of Real del Monte bought most of Romero's properties. From this period, Real del Monte was exploited by monopolistic enterprises: between 1824-1849 by a British Company and from 1849 to 1906 by Mexican entrepreneurs. In 1906, the company was bought by American capital and in 1947 became a government-owned enterprise.

The tendency to concentrate different activities related to mining was continued by the English owners and then in 1849 by its Mexican successors, the Compañía Aviadora de Minas de Real del Monte y Pachuca. In 1906 the United States Mining and Refining Company acquired the holdings of the Mexican company and controlled regional mining until 1947, when the Mexican government took the activity into its hands. In 1990, it was sold to private entrepreneurs.[6]

We stated that the construction of the tunnel was the main work in the 18th century and it helped with the exploration of new rich veins that led to the boom. Nevertheless, the drainage problem was not entirely solved. In 1776, some years after the completion of the tunnel, the visitor Antonio de Ulloa pointed out that it was higher than the depth the mines had reached, so it was necessary to raise up the water to this level for drainage. It was clear that another tunnel to drain the deepest mines was needed,[7] but this task would be carried out a century later.

While the technical problems increased, the quality of the ores diminished and so the boom came to its end. By 1801 in Real del Monte, most of the works were abandoned. Some years later, the war of Independence worsened the situation. Both royal and independent armies collected funds in mining regions which discouraged investments. In 1819, the works were completely paralyzed and the town depopulated.

After the war of Independence, the new Constitution of 1824 allowed foreigners to invest in mines. Most of the mines in the region and other properties of Romero de Terreros went into the hands of the British Company of the Adventurers of Real del Monte. The English never experienced a boom, but they introduced important changes that transformed the view and display of the town and its surroundings.

The different companies inherited invaluable evidence of their workings in the area, unfortunately many of them have not survived. The 19th-century mining operations are more evident and it is very likely that they concealed some of the previous workings during the 1820s and the 1830s. A major restoration of the area was carried out by the British Company. The introduction of the steam engine and new methods of ore reduction were reflected in many of the buildings which are very well kept up to the present day.

With the establishment of this company, considerable social changes came along. The company brought specialized labor. By the middle of the 19th century, a community of about 300 British subjects were living there forming the largest British community ever found in Mexico.

Financial problems and the want of rich ores led the British to bankruptcy. In 1849, its property was sold to a group of Mexican entrepreneurs. The new company continued some of the works in Real del Monte. One of the most important was the construction of the tunnel named Aviadero, the entrance of which can be seen today.

Because of the lack of workers, the new Mexican company signed a contract with the local government to assign prisoners for the work on the mines. In 1850, a prison was established near the Terreros' shaft and it survived until the middle of the 1870s.[8]

The Mexican company also exploited the nearby Pachuca mines, where it struck a bonanza.[9] Attracted by this fact, many people abandoned Real del Monte, mining was reduced, and one thousand workers were dismissed. In 1864, the works were completely stopped.

In the early 1870s, mining in all areas experienced a deep crisis. The Company faced serious problems as result of increasing expenses and the fall of the international price of silver. The owners decided to lower salaries and dismiss workers in order to continue mining. This decision provoked a memorable strike that began in Real del Monte in 1872. The movement extended to all the region and lasted several years.[10]

At the end of the 19th century, the mine of Dificultad experienced a bonanza that encouraged new investments. A big steam engine was placed in this mine. It can still be admired today.

In this period, several technical improvements were also introduced, such as electricity, dynamite, compressed air drills, and railways inside the mines.[11] Other changes took place in the town. In 1871 was inaugurated the telegraph and some years later was built the Hidalgo Theater. In 1905, the streets were illuminated with electric lights and the path to the Hiloche wood was paved with stones.

Nevertheless, the Mexican entrepreneurs could not afford the increasing costs of production, the unfavorable conditions of the market, the introduction of the gold standard, and the competition of better enterprises. The Mexican company was sold in 1906 to the United States Mining and Refining Company. The new owners introduced modern methods of extracting and refining silver

The Dolores Mine and its surroundings. Photo by Victor Ortiz.

ores and in addition, they started the production of lead and zinc mining.[12]

World War I and the Mexican Revolution affected the mining activities in the region. Production fell, national and imported commodities were scarce, internal trade was reduced, and workers left. In spite of all these inconveniences, in Real del Monte attempts were made to maintain silver production by introducing the flotation process.

In this decade, the United States Mining and Refining Company bought a portion of the Hiloche works in order to open the shaft of La Purísima and to install a grinding mill. In return, the company built the Santa Rosalía dam for the inhabitants of Real del Monte.

Among the principal mines exploited by the American company, we can mention the Purísima, Dificultad, Santa Inés, Cabrera and La Rica. All of them keep their shafts open today and are communicated. In 1928, began construction of a tunnel of 6 kilometers intended to connect the La Rica mine with the one of San Juan Pachuca, and through it the ores were to be transported to the refining hacienda Loreto. The new refining hacienda of Loreto was inaugurated in 1930; it had electric locomotives that pull 20-ton wagons. From that time, the new Loreto plant concentrated all the refining works of the company. For this reason, the Guerrero hacienda was abandoned, but its surviving remains provide an idea of the works that were carried out there.[13]

Besides the American Company, other companies exploited the mines in the 1920s. Amongst them, we can mention the Santa Margarita, San José S.A., Peral del Oro, San José Doradores, Manzano, and Rosario Viejo.[14]

With the depression of 1929-1932, many mines were closed. This provoked unemployment and discontent. To face the problem, the government supported the creation of mining cooperatives of workers in this area.[15]

At this point, we would like to remark on the strength and fighting spirit of the mining workers of this area. They were protagonists of many movements beginning with the first worker strike in Mexican history. The leading role of the Real del Monte workers can be seen still in the 1930s when the National Union of Mining Industry Workers was constituted and they held some of the main positions.[16]

In the 1940s, the Mexican government began a new policy of direct participation in the mining industry. For this purpose, there were created enterprises with national capital. In 1947, the government bought the Real del Monte Company. The administration of the Mexican government lasted 43 years. By the end of the 1980s, a new economic policy was introduced and the government decided to sell to private companies almost all of the state enterprises. In 1990, the Real del Monte Company went into private hands. Nevertheless, most of the characteristic of the mining district and the traces of its history still remain.

The town of Real del Monte has become a national historical monument due to its centennial mining buildings. We still have structures, houses, reduction haciendas, and even social sites which have survived through the centuries. From colonial times, we were able to find remains of the very first mines exploited like the Dolores, the Acosta, the Santa Maria, and the San Miguel Regla Reduction Haciendas. The National Institute of Anthropology and History initiated a project a few years ago to declare Real del Monte a national historical site. Then, the Subdirección de Zonas y Monumentos Históricas of the National Coordination of Historical Sites carried out a survey of the monuments existing in the area and recommended its conservation and restoration. With this purpose, specialists prepared maps and an official declaration. In this project, the architects Miguel Angel Gálvez, Alfredo Hernández A. and Erasmo Cordero also assisted. Local authorities supported these actions.[17]

The town maintains the16th-century's urban plan and it developed around this original settlement. In the documents of the preservation project, the authors point out that the plan of the city, the organization of the architectural urban space, and even the materials and construction system used in the town, reflect the mining activity. They add that the characteristics of the city's construction and the interrelationship between space and urban structure as they exist now are invaluable evidence for the social, political and artistic history. These elements stimulated the decision to protect, restore and maintain Real del Monte under the federal law on the protection of monuments and archeological and artistic sites, which grants protection to the

area in order to consolidate the national cultural patrimony of the country.

Summarizing, the National Institute declared 31 blocks and 71 buildings built between the 16th and 19th centuries within the central area of the town as the main area to protect. They represent various aspects of life in different historical periods.

Historical site declaration corresponds only to the main urban area of Real del Monte: the buildings and streets of the mining town. Structures dedicated to the working of the mines were not included. However, in the town exist some mines and the remains of one reduction hacienda; these include the mine Dolores, mine La Rica, mine Purísima, mine Dificultad, mine Acosta, mine Escobar, and the embankment of the reduction hacienda Guerrero. The Dolores and Acosta mines were like fortresses, solid walls protected and isolated them. These structures can be seen now.

In this complex of historical monuments stand out the cemeteries which are also a very important source for social history. Besides an English cemetery, there are three Mexican cemeteries in Real del Monte. Unlike the British, these cemeteries, also built during the 19th century, are located just outside the mines. Near Dolores, the most important mine during colonial and British period, is the cemetery of the Virgin Mary. Close to Dificultad mine is the St. Felipe cemetery and down the hill near Purísima mine lies the St. Agustin cemetery.

Besides the efforts of the National Institute of Anthropology and History, in 1995 the Universidad Autónoma Metropolitana and other local cultural and public institutions carried out a project of restoration of the buildings and a project to catalog the historical monuments in the Real del Monte municipality. The progress of these projects have not been published.

Real del Monte stands as a living heritage of the Mexican silver mining history. The town and the neighboring Pachuca, el Chico, and the area of reduction haciendas in Huasca—all in the state of Hidalgo—constitute one of the three most important Mexican mining regions. We are convinced that the preservation and protection not only of Real del Monte, but also these two other regions is an urgent need in order to lay the foundations of a better knowledge of our mining past.

Notes

1 *Minas de Pachuca*, Vargas Rea, 1954, p.55.

2 This method, based in mercury, made possible the amplification of the works not only in this region but all over New Spain, because it demonstrated its usefulness for most ores until the end of the 19th century.

3 Almaraz, Ramón, *Memoria de los trabajos ejecutados por la Comisión Científica de Pachuca en el año 1864*, México, Imprenta de J.M. Andrade y F. escalante, 1865, pp. 142-143.

4 Carreri, Gemelli, *Viaje a la Nueva España*, México, UNAM, 1976, p. 89; Gerhard, Peter, *Geografía histórica de la Nueva España. 1519-1821*, México, UNAM, 1986, p.127.

5 See a detailed analysis in: Ramos, Agustín. "La herencia de los Bustamante o el verdadero fundador del Monte de Piedad y genio genuino de la Veta Vizcaína" in: *Minería colonial latinoameericana*. México, INAH, 1992, pp. 69-78.

6 Herrera-Canales, Iné y Rina Ortíz-Peralta, "La minería de Hidalgo de la Colonia al siglo XIX" in: *Recuento histórica bibliográfico de la minería en la región central de México*, Morelia, Universidad Michoacana de San Nicolás de Hidalgo, 1994, p. 25-27; 31-42.

7 Solano, Francisco. *Antonio de Ulloa y la Nueva España* , México, UNAM, 1979, p. 84.

8 Velasco, Cuauhtémoc. "¿Correción o exterminio? El presidio de Real del Monte, 1850-1874," *Historias*, nº.

9 Herrera-Canales, Inés, "Empresa minera y región en México, La compañía de Minas de Real del Monte y pachuca, 1824-1906," *Siglo XIX*, Año IV, Nº 8, jul-dec 1989, p. 108.

10 Flores, Eduardo. *Conflictos de trabajo en una empresa minera, Real del Monte y Pachuca, 1872-1877*, México, INAH, 1991.

11 Herrera and Ortiz, Op. cit., p. 36-38.

12 Ibid., p. 41-42.

13 Galindo, Jesús, *El distrito minero de Pachuca-Real del Monte*, s.p. i, p. 37.

14 Castanedo, José. "Los distritos mineros de Pachuca, Real del Monte y El Chico forman la región más productora de plata en el mundo," *Boletín minero*, XXIII, jan-jun 1927, p. 413.

15 Sariego, Juan Luis. et. al. *El estado y la minería mexicana. Política, trabajo y sociedad en el siglo XX*, México, Fondo de Cultura Económica, 1988, p. 212; 153-154.

16 Besserer, Federico, et. al. *El sindicalismo minero en México 1900-1952*, Néxico, ERA, 1983, p. 30.

17 *Proyecto de Zona de Monumentos históricos del Mineral del Monte en el estado de Hidalgo*, México, Subdirección de Monmentos Históricos de la Coordinación de Monumentos Históricos del INAH. Coordinación y dirección de los arquitectos Miguel Angel Gálvez G, Alfredo Hernández Angeles y Erasmo Cordero Hernández, 1993.

Inés Herrera is Senior Researcher with the National Institute of Anthropology and History, who works on economic history and specializes in Mexican mining and trade history.

Rina Ortiz is Senior Researcher with the National Institute of Anthropology and History, who works on economic history and specializes in Mexican mining history of the 19th century.

Beverly Rich

The Mayflower Mill
Reclamation and Re-use

After negotiating a legal maze relating to reclamation and liabilities, the Mayflower Mill faces the future as an excellent example of flotation milling, one preserved for educational purposes.

Located at 9,360 feet in the rugged and spectacular San Juan Mountains of southwestern Colorado is Silverton, a National Historic Landmark. Many of the elegant Victorian structures built here at the turn-of-the-century are being carefully preserved, providing a rare opportunity for the thousands of tourists who arrive on the Durango & Silverton Narrow Gauge Railroad to experience the history of the "mining camp that never quit."

San Juan County was once a major gold and silver mining area, bustling with four railroads that transported the rich ores from the high mountain camps. Through most of the last century, mining has played a major economic role, providing high-paying steady jobs, and stability for the region. But in 1991, the gold mining era ended when the 125-year-old Sunnyside Mine, the last large commercial mine in San Juan County, ceased operations. Low base-metal prices and diminishing gold and silver reserves forced the great mine to close. In its colorful lifetime over 900,000 ounces of gold were produced as well as, millions of ounces of silver and tons of base metals.

The Mayflower Mill produced more than 1.3 million ounces of gold from the Shenendoah-Dives and Sunnside Mines. The Mill is now administered as a historic property by the San Juan County Historical Society.

Sunnyside Gold Corporation, the mine's operator, immediately commenced implementation of the 10.5 million-dollar reclamation plan required by its mining permit, which included sealing the mine with concrete plugs to stop mine drainage. However, the permit also required that the historic Mayflower Mill be torn down and the site reclaimed.

Once the West had hundreds of precious metals mills. Now only a handful remain and most are in various stages of ruin. The Mayflower Mill (also known as the Shenandoah Mill) was the last major accomplishment of Charles A. Chase, a metallurgist and successful mining man. Due to the depression in the 1930s, most mining companies throughout the West demolished mills and other mine-related structures to reduce tax and insurance liabilities. But Chase gambled that base metals—lead, copper and zinc— could carry the overall cost of operation with a little profit coming from gold and silver recovery. To improve productivity and processing efficiencies, Chase designed the-newest, most modern mill ever. The Mayflower Mill also incorporated new environmental processes. Instead of dumping waste rock into the rivers as had been historically done, Chase pioneered holding, or tailings, ponds to contain waste material.

Over the years, the mill was operated by a number of owners, including the Shenandoah Mining Company from 1929-1952. Not all ran smoothly. In 1939, the Shenandoah Mining Company was the target of a bitter strike by Silverton Miners Union-CIO, Local #26. Congress had just passed the "Wages-Hours" Act, which called for overtime to be paid for any hours worked in a week beyond 48. Chase reacted by cutting the base wage to compensate and the miners struck. The Mayflower Mill was the picket site. It was the Depression and the mining industry was in severe decline. At first the Union had strong support from the ranks, but as time dragged on and paychecks didn't arrive, the men started to worry. There were no jobs anywhere else. On the night of August 28, 1939, a meeting was held at the Union Hall. Outside a mob had formed. A fight broke out, blows were exchanged, and the Union leaders were escorted from town for their own safety. Agitators dissolved the Miner's Union, and the strike was broken. Charges were filed with the National Labor Relations Board against Shenandoah and ironically, after 10 years in the courts, the company was convicted of unfair labor practices.

Because of its almost continuous use since it was built, the Mayflower Mill has always been kept in good repair. Although it was modified three times, the original interior machinery remains intact and the exterior configuration is the same as

when constructed. The mill was connected with the Shenandoah Mine across the Animas River canyon by a 10,000-foot aerial tram, the only tram constructed with metal towers in the San Juans. Using gravity for power, the tram carried the ore from the mine down to the mill, where it was crushed and processed using the flotation process, a system by which the ores are mixed with chemical reagents causing them to separate from each other and be "floated" off. All of the machinery remains as it was in August 1991, when the final whistle sounded and the mill closed forever. In 1994, the mill and the ponds were placed on the National Register of Historic Places.

Because of its significance to San Juan County, the San Juan County Historical Society approached Sunnyside Gold Corporation and suggested the company donate the Mayflower Mill to the historical society. After four years of negotiations, the proposed donation was accomplished in 1996, the deed was recorded, and the property transferred to the San Juan County Historical Society. The Historical Society was happy because it had preserved a nationally important property, the company was happy because of the favorable publicity, and the whole town was delighted because one of the last remaining pieces of its heritage had been saved. An apparent fairytale ending, but in the real world it is never that easy.

After the preliminary discussions, both parties realized that many things had to happen. First, the Sunnyside Gold Corporation would have to amend its reclamation permit. Accomplishing this administrative task required going through the gauntlet of public agencies entrusted with that decision-making process, as well as a series of public hearings. Equally daunting was the reality that the Society had to research in detail all possible liabilities involved in taking possession of a former industrial site, albeit a historic one. Due diligence for the San Juan County Historical Society's final decision had to be provided to our membership. Most of the Historical Society's Board of Directors had been involved one way or another in the mining industry. We knew that the mill could potentially be declared a hazardous waste site. Certainly, any operation that processed chemical separation of metals for a period of 60 years, many of those years before modern environmental standards were imposed, possessed a high potential for such classification. In fact, the property had been listed by the Comprehensive Environmental Response, Compensation and Liability Act, administered by the Environmental Protection Agency. Were we putting the Society's assets (museum and archive) at risk? Second, were we risking any personal liability for the Board and/or our membership? Federal laws state that four classes of owners face cleanup liability: current owners, owner or operator at the time of operation, persons who arranged for treatment or disposal of hazardous substances at the property, and persons who transported hazardous substances to the property. The only "innocent" owner is one that can prove that he/she inherited the property and had no link to any hazardous substances on the property and no knowledge they might exist on the property. In other words, the way the law reads now, anyone in the title chain might be liable whether or not they had anything to do with any contamination that may be present.

Conversely, we also knew that the Sunnyside Gold Corporation was implementing a highly respected 10.5 million-dollar reclamation program. We also knew that Sunnyside could not have its reclamation plan amendment receive approval to give us the Mayflower Mill, or be released from that part of its bond without a thorough cleanup and reclamation of its property. In fact, successful reclamation of the Mayflower Mill property was a critical component of their conditions for donation. The San Juan County Historical Society hired one of the best water law firms in Colorado to help us research our options and calculate our risks. This firm worked *pro bono*, donating much of its work to the Society. Extensive legal research indicated that there were certain laws that protected volunteer Boards of Directors from personal liability in cases like these, when due diligence is performed and where there was no "willful and wanton" activity involved.

At first, the proposed donation included the tailings ponds. However, after careful review, the Historical Society decided not to accept them. This decision was reached mostly because it would be beyond our ability, as a small group of volunteers, to maintain the site, even though the ponds had been thoroughly re-contoured and reclaimed (so

Rod Mill located within the Mayflower Mill.

Ore bucket located within the tramway terminl at the Mayflower Mill.

much so, that they were identified as non-contributing on the National Register nomination form).

Several approaches were used to help the Historical Society become legally and environmentally educated. Members inspected the sites within the proposed 80 acres of donated property in order to monitor the reclamation efforts. Sunnyside Gold Corporation was very forthcoming and provided access to reports, plans, and historical papers that pertained to the donated property. We also requested pertinent information from the Division of Minerals and Geology, the Colorado Department of Health, and the Environmental Protection Agency. The Historical Society also sought professional counsel and guidance from friends in both the mining industry and the preservation community.

The Society knew that it realistically could not expect to successfully take on a project of this magnitude with its existing limited finances. Understanding the economic situation, the Sunnyside Gold Corporation also included an endowment of $120,000 with its donation. In addition, Sunnyside, a wholly owned subsidiary of Echo Bay Mines, Ltd., has been exceedingly generous with donations of mining equipment, which have further enhanced the Historical Society's already outstanding collection.

In 1995, the San Juan County Historical Society was finally able to sit down at a meeting and propose a formal motion to accept the Mayflower Mill, confidant that we had explored every avenue, and that the building was important enough to the history of San Juan County that it was worth taking what we deemed a "marginal" risk to save it. Later that summer, the Durango office of the Division of Minerals and Geology examined the site in detail and pronounced it clean. In the fall, Sunnyside's permit was successfully amended to allow the transfer. In June 1996, Silverton commemorated the donation with a gala celebration featuring tours, the famous Silverton Brass Band, and a community barbecue.

Concurrently with the aforementioned negotiations, the Historical Society also pursued an *Agreement and Covenant Not to Sue* with the Environmental Protection Agency. This agreement, eventually signed in 1996, was advertised in the Federal Register and concurred with by the Judicial Department. As one of our Board members said: "This donation has been all the way to Washington D. C. and back!" *The Agreement and Covenant Not to Sue* was almost unprecedented at the time. However, similar agreements are becoming more common as large industrial sites lie vacant, unused, and not sellable because possible hazardous waste problems may exist at the site. Our agreement, initiated and handled very ably by the EPA's Denver office, holds the Historical Society harmless for any possible contamination on the Mayflower Mill site, which occurred before we took ownership; "holds harmless"—two very important words. The agreement requires that the Historical Society use the property for our stated use: preservation, tours and education. It does not unduly restrict the Historical Society from using this property "for any lawful purposes." It also does not hold the Society harmless for any contamination that it might be responsible for after we took ownership. The agreement also indemnifies the federal government against any lawsuit that the San Juan County Historical Society might bring against it. The Environmental Protection Agency decided in the Mayflower Mill situation that there was "substantial public benefit" and hence, sufficient cause for its agreement.

After spending most of 1996 in development, the San Juan County Historical Society opened the Mayflower Gold Mill Tour on May 15, 1997. With owners so committed to preservation, the future of the old mill seems assured.

Beverly Rich, life-long resident of Silverton, Colorado, is the Chairman of the San Juan County Historical Society and the San Juan County Treasurer.

Logan W. Hovis

Finding Them Was the Easy Part

Making Sense of Historic Mine Sites on the Last Frontier

The National Park Service Alaska Region is preparing to release *The Quest for Gold*, an overview of inventory work on historic mining sites in the Alaska national parks. The report, being compiled by Becky Saleeby, summarizes and analyzes 10 years of fieldwork conducted in nine parks between 1986 and 1996. *The Quest for Gold* will close a highly productive chapter in the identification and management of cultural resources in Alaska, an effort which establishes substantial foundations for continuing research on historic mining sites. No small task.

Over the 10-year period, 40 different archeologists, historical architects, and historians working with the Cultural Resources Mining Inventory and Monitoring Program surveyed well over 44,000 acres and recorded 345 discrete sites. Logistical concerns made for interesting fieldwork. Access alone was not a simple consideration. There are few roads in Alaska. Survey parties spent hundreds of hours in small aircraft. On the ground, they worked in a wide range of situations. They climbed mountains, waded through swamps, and became intimately familiar with all manner of dense vegetation including devil's club and alder thickets. The rewards were often great: beautiful sunsets in remote and unfamiliar landscapes and the pleasant problem of working in a landscape so complex and cluttered with mining features and artifacts that one literally did not know where to begin.

The program served several masters and provided a wide range of information to park managers. Initially, the work was done to comply with court orders, contribute to the writing of three major environmental impact statements on mining in the parks, and facilitate the administration of the Mining in the Parks Act. Given the relative youth of most national parks in Alaska, the program soon began to perform basic inventory functions and to identify and assess historic sites on abandoned mine lands as well. The program did not have the luxury of collecting and analyzing information prior to making recommendations to park management. Managing mine lands and making sense of the associated historic sites was a complex and often contentious issue from the first.

Scope of the Problem

Alaska possesses a rich mining history. Native Alaskans have recovered and traded copper for at least a thousand years. The Russians mined a little coal in the 1850s. Prospectors from California and a hundred other gold fields worked their way north in the 1870s and 1880s culminating in the great northern gold rushes: the Klondike, Nome, Fairbanks, and a hundred other placers large and small. Thereafter, mining became a constant in the life of the north. Small-scale placer mining employing relatively primitive methods coexisted with the larger industrial mining operations employing dredges and other capital intensive mining techniques. Hard rock mines have operated in Alaska since the 1870s, some small, some large, some phenomenally rich. Only in recent years has mining and fishing been overshadowed by the phenomenal growth of the oil industry based on Prudhoe Bay and the North Slope.

Well over a hundred years of mining activity has left its mark on the land. Scratch apparent pristine wilderness and evidence of mining frequently appears. The new parks and park expansions established in 1980 by the Alaska National Interest Lands Conservation Act brought several historic mining areas under National Park Service administration. Wrangell-St. Elias National Park and Preserve— the largest single unit in the national park system at more than 13 million acres—encompasses five significant historic mining districts representing three gold rushes and the Alaska Copper Belt centered on the Kennecott mines. The transformation and expansion of Mt. McKinley into Denali National Park and Preserve took in the Kantisha mining district, another gold rush locale. Gold rush sites and history on the Yukon River were defining elements in the creation of the Yukon-Charley Rivers National Preserve. Gates of the Arctic National Park and Preserve borders on the Koyukuk mining district, the focus of one of the northern-most gold rushes. Kenai Fjords National Park contains a hard-rock gold district centered on Nuka Bay. Klondike Gold Rush National Historic Park commemorates the "Days of '98." It is the rare park in Alaska that does not

contain some historic mine lands or address mining as a multi-faceted management issue.

The Alaska National Interest Lands Conservation Act closed the newly created park lands to appropriation and disposal under the mining laws—subject to existing valid rights. As one result, historic mining lands and the historic sites contained therein were frequently, if not usually, located on mining claims, patented and unpatented. In 1988, when the inventory program was in its third year of operation, there were 1,650 active claims in the parks; 923 were in Wrangell-St. Elias and 428 in Denali. These active claims covered approximately 33,000 acres. An even larger area, nearly 60,000 acres, was defined as abandoned mine lands.

Historic mining sites in the Alaska parks are difficult to manage. Confirming their existence and assessing them is something more than an academic exercise. They are more than just resources on the land. Mine lands are often the focus of intense competing interests. When historic sites are located on active mining claims, they need to be considered and possibly protected as part of the permitting process. Mining is permitted on valid claims within the national parks in Alaska subject to approval of the mining plan of operations. Review of the plan involves an assessment of the effects of the proposal on natural and cultural resources. Compliance with Section 106 of the National Historic Preservation Act is a major element in the process.

Frequently, historic mining sites are contaminated sites. Hazards abound from rusty metal to abandoned explosives. Often there is a direct correlation between the degree of historic significance and the level of contamination. Historic placer mining employed mercury, sometimes in large quantities. More recent placer mining activities are usually mechanized, creating numerous opportunities for petroleum contamination. Lode mines were frequently industrial undertakings characteristic of the early-20th century with all that implies in terms of hazardous wastes and environmental disturbances. Mining leaves obvious marks on the land, which some see as historic resources and others see as damaged lands requiring mitigation.

The ownership of historic resources on mine lands is a recurring concern. Patented mining claims are private property. Unpatented mining claims, while conveying something less than fee simple title, gives the holder the right to extract the minerals and the use of surface areas to facilitate mining with certain restrictions. Resource protection and management is difficult under such conditions. Accordingly, there has been a regular acquisition program for mining properties in Alaska for some time. Recently, a legislative taking was authorized for Denali National Park and Preserve to facilitate the acquisition process.

The isolation that has long protected many historic mining sites is evaporating. Many of the sites are located in parks that are experiencing a dramatic increase in visitation. Often the mining sites are the attraction. The Kennecott mine complex is one reason, among many, why people around the world come to Wrangell-St. Elias. While there may be few roads in the Alaskan parks and preserves, air strips abound and small airplanes are plentiful. How to protect these resources, while making them available to the visiting public in a rational manner, is a constant and complex process.

What's Been Found So Far

After 10 years of research and field work, a number of instructive observations can be made about historic mining sites located within the boundaries of the national parks in Alaska. Several may appear as truisms; they bear repeating nonetheless. Simply put, there are a lot of mining sites to consider, they demonstrate a wide range of site types, they are often complex and well-preserved, and they present bothersome questions.

First, there is a significant number and a wide range of well-preserved historic mining sites; 178 placer mining sites have been recorded. Most are complex sites involving cabins or tent frames, equipment, and significant landscape modifications. In some of the placer areas, mining-related structures, artifacts, and associated ground disturbances were so extensive that site boundaries were difficult to identify. Unusually dense concentrations of features—often centered on cabin clusters—became discrete sites during the earlier years of the program. Items of interest not directly associated with these sites were noted as isolates. An expedient at the time, this approach has subsequently been of great value in determining larger

Placer mining was a labor intensive undertaking. At least seven men are involved in preparing for a clean-up on Chititu Creek in this 1908 photo. Note the electric lights which allowed around-the-clock operations during the brief summer months. (S.R. Capps, No. 168, U.S. Geological Survey.)

patterns of land use and the associations between sites.

Eighty-five lode mining sites were identified. While many contained little more than a short adit and a moldering cabin consistent with 20th-century exploration and initial development practices, others were much more complex. One quarter of the sites contained mill buildings and equipment. These sites are in addition to the better known mines, which had been examined by others, earlier or under different programs. For instance, in Wrangell-St. Elias, the Nabesna gold mine was placed on the National Register in 1979. The spectacular Kennecott copper mining complex was declared a National Historic Landmark in 1987 and was documented for the Historic American Engineering Record in 1985-86.

Placer mining sites in the Alaska national parks frequently contain a wide range of features: cabins and tent frames, dams and ditches, pipelines and flumes, sluices and tailings. Many sites encompass extensive, often elaborate hand-stacked stone walls and spoil piles. Lode mining sites typically break down into two distinct types: habitation and support or processing structures at a lower altitude, and the mines and their associated structures at higher elevations where the mineralization is exposed. A number of smaller mills were identified which employed gravity, cyanide and flotation processes to recover copper, antimony or gold. Other sites were as much home as mine. Flower and vegetable gardens were lovingly maintained at mines in several parks and their patterns may still be seen on the land. In the remoter areas, a surprising number of sites contain small artifacts, domestic items, and tools. One site high in a glacial cirque yielded a whale bone corset and women's button shoes.

Remote mining sites often contain a wealth of small artifacts not usually found in more accessible areas. The interior of a small bunkhouse defines major aspects of the social life of a hard rock miner in an isolated mining camp in 1930s. NPS photo.

Many of the sites are unusually complete and multidimensional. The potential for elaborate lode mining sites was understood at the start of the program. Complex placer mining sites were more surprising. Many of the sites first recorded as discrete entities have proven, upon subsequent consideration, to be interconnected and interrelated. Some placer streams can be legitimately discussed as linear sites extending along a drainage for five, sometimes 10, miles or more.

Placer areas can demonstrate depth in the sense that successive periods of mining and sequential exploitative techniques can be discerned on the ground. Marginal areas of a larger placer stream will still exhibit evidence of early prospecting and hand mining methods. The more productive areas might demonstrate the operational sequence of hydraulic mining. For example, older diversion dams are partially exposed under relatively younger tailings piles revealing a discernible sequence. Bed rock trenches and boulder piles mark where the water once ran as the stream was shifted back and forth across a valley in order to expose and work the paystreak. Drift pits and collapsing tunnels in the gravel banks and hillsides demonstrate the search for buried channels.

Politics, economics, and geography have protected many sites from destruction by subsequent mining development or scavenging. Many of the mining areas became economically marginal after the initial period of exploration and development. Where it was viable, subsequent mining efforts were conducted in a manner which did not fully obliterate evidence of previous operations. The scrap drives of World War II did little serious damage to Alaskan mining sites. It simply was not practical or profitable to recover scrap iron and other metals. The prohibition on gold mining during the war also aided the preservation of sites, as did the general inflation and the relative decrease in the value of gold during the immediate post-war era.

Making Sense of What's Been Found

The need to make sense of what was being recorded in the field was immediate. Area-specific historic research—locally referred to as drainage histories—were compiled ahead of the fieldwork to the extent possible. These brief studies identified historic mining operations known in a given area, suggested the potential complexity of the sites from archival sources, and made preliminary assessments of the area's significance. Considerable attention was given to descriptions of mining-related features associated with the area in order to provide a basis for assessing the integrity of sites as they were found. A more general historic overview, *Golden Places*, was written by William R. Hunt, a long-time Alaska historian. Several historic resource studies were either available to the project or were researched and written at the same time. Especially useful were Hunt's *Mountain Wilderness* written for Wrangell-St. Elias, William Brown's *Gaunt Beauty ... Tenuous Life*, written for Gates of the Arctic, and his *A History of the Denali-Mount McKinley Region, Alaska*. It is the rare historic resource study for an Alaska national park that does not reference historic mining.

No discussion of historic mining in Alaska is complete without reference to the Kennecott National Historic Landmark. The gravity concentrator, a 14-story structure operated from 1912 to 1938, is now a part of Wrangell-St. Elias National Park and Preserve. NPS photo.

Field recording went hand-in-hand with the evaluation and management of sites and was sometimes driven by immediate needs. Assessments of the particular value of a given site and the need to make comparative and qualitative judgments between sites did not always happen leisurely. Miners wanted to exercise their legitimate rights to develop their mining claims. The National Park Service had sometimes contradictory goals in the management of abandoned mine lands; it understandably wanted to mitigate the negative effects of mining on the environment at the same time it strove to preserve and protect historic sites. Visitors wanted, and were increasingly gaining, access to more and more of the parks, raising protection issues for the resources and the public. The pressures present opportunities for visitor education and the interpretation of mining history in the parks.

The complex nature of the sites that were being recorded, and the often conflicting demands placed on them, particularly in the placer mining areas, quickly forced the project beyond inventory and into analysis. Different types of placer mining were associated with distinctive artifacts and features. Landscape modifications, particularly the form and location of tailings and spoil piles, assumed a degree of importance that few had anticipated when the program began. National Park Service historians developed a site typology describing characteristics and diagnostic artifacts and landforms.

Nominations and determinations of eligibility for the National Register have been useful tools in the evaluation and management of historic mining resources. Districts are the essential level of evaluation; little else can do justice to the scale and scope of many of the Alaskan mining sites. In Denali National Park and Preserve, the Old Eureka-Kantishna Historic District extends over six miles of stream bed and includes the site of a gold rush community and extensive evidence of early placer mining activities. The Coal Creek Mining District in Yukon-Charley Rivers National Preserve covers 350 acres along seven miles of Coal Creek. The district includes, among other things, a gold dredge, several mining camps, a road house, and a sophisticated water supply system.

In Wrangell-St. Elias National Park and Preserve, the Gold Hill Historic Mining District includes 21,725 acres and addresses 361 contributing buildings, sites, structures, and objects. The Gold Hill National Register nomination reflects the direction current projects are taking in Alaska. The initial recording of sites in the Gold Hill area was performed by the region-based Inventory and Monitoring Program with assistance from the park. The nomination was prepared by the park with support from regional staff. As a companion piece to the nomination, Geoffrey Bleakley, a historian at Wrangell-St. Elias, wrote *A History of the Chisana Mining District, Alaska, 1890-1990*, a narrative history of the Gold Hill area directed toward park management and the knowledgeable public. More important, the nomination was one element of a larger cultural landscape study that addresses the Gold Hill area as a whole, a significant step beyond considering it as a complex of interconnected sites. Cultural landscape inventories and reports go beyond describing sites and establishing significance; they allow, even require, recommendations for managing historic resources.

Into the Future

The regionally-based Mining Inventory and Monitoring Program no longer exists. It has served its purpose and leaves a body of useful information about historic mining and mining-related sites in the Alaskan parks. Several people involved with the project have moved on to cultural resource management positions with the various parks ensuring that there are staff available who are aware of and able to use this information. Approaches to the recording and evaluation of mining sites derived from, or developed parallel to, the program continue to be useful. The emphasis on larger units of analysis, as currently expressed through cultural landscape studies, is particularly useful. Wrangell-St. Elias is currently conducting two such studies: one in the remote Bremner mining district and a second at the Kennecott National Historic Landmark, an increasingly popular visitor destination. Not everything related to mining in the parks has been found. However, there are tools at hand to make sense of the historic mining sites that may be discovered in the future. Shifting the focus from a regional basis to the individual parks encourages closer attention to the history of the area. As important, perhaps more so, it provides greater opportunities to make these historic sites available to visitors and to share the knowledge gained over the last decade with the widest possible audience. Again, no small task.

Logan W. Hovis is a mining historian with the National Park Service's Alaska Support Office.

Frank Norris

Gold Rush-Era Mining Sites in Alaska's National Parks

A century ago, perhaps a hundred thousand "stampeders" headed north in search of Klondike gold. An estimated 30,000 to 40,000 made it all the way to Dawson City, Yukon Territory. There they found their golden dreams shattered by the hard truth that all the gold-bearing creeks had already been staked. The disillusioned throngs were then forced to make difficult choices. Many idled about Dawson for a few weeks, then took the long trip home. But others—the hopeful or the merely desperate—stuck it out. Those that remained formed the core of those that prospected the North Country's mountains and valleys for decades thereafter.

News of gold discoveries soon drew many of Dawson's miners and prospectors west into Alaska. In the spring of 1899, word filtered into town that a fabulous gold strike had been made in northwestern Alaska. Gold had been discovered the previous September along Anvil Creek near the northern shore of Norton Sound. The Nome gold rush of 1899-1900 attracted more than 20,000 prospectors, capitalists, and camp followers. Nome, and much of the surrounding Seward Peninsula, remained an active mining area for years afterward.

A few years later, another big mining rush took place in Alaska's interior. Felix Pedro, an Italian immigrant, discovered gold near the Chena River in August 1902. From 1903 to 1905, thousands flocked to the Fairbanks gold camp.

Based on these and other discoveries, prospectors fanned out all over Alaska and many small but important gold rushes took place. Some of these occurred within or near Alaska's national park units. For instance, within the Yukon-Charley National Preserve, several Yukon River tributaries were mined by primitive means around the turn of the century and by dredging operations in later years. Gold was discovered in what later became Denali National Park and Preserve in 1903. By the end of the decade, scores had flocked to the Kantishna area and miners worked the area's creeks for years afterward. On the north side of the Wrangell Mountains, within today's Wrangell-St. Elias National Park and Preserve, courageous miners braved frigid, long winters to glean meager returns from area streams. Kobuk Valley National Park, as well as Lake Clark National Park and Preserve, also witnessed gold rush-era activity although on a small, more ephemeral scale.

By the 1970s, the old mining areas, with the notable exception of the Kantisha area, were largely abandoned. There were relatively few active mining claims and even fewer holders of patented mining property. That decade, from December 1971 until December 1980, was spent debating the Alaska lands question. That debate concluded with the enactment of the Alaska National Interest Lands Conservation Act. This act created or expanded most of Alaska's national park units.

In the public's imagination, Alaska has long been equated with outstanding scenic wonders and wildlife values. Most of the units created by the Alaska National Interest Lands Conservation Act contain spectacular wilderness. Eight of Alaska's park areas boast large designated wilderness areas. The total area in wilderness exceeds 32 million acres, an expanse greater than the State of Mississippi. The preponderance of wilderness has led

The lonely, long-abandoned Yale Cabin dates from the early years of the century. It is now located in Gates of the Artic National Park and Preserve. Photo by Jet Lowe, NPS.

many of Alaska's park visitors—and in many instances National Park Service decision-makers as well—to believe that cultural resources in Alaska's parks are relatively unimportant.

In order to educate the public and park staff about this rich cultural heritage, cultural resource professionals in recent years have compiled an impressive list of archeological overviews, historic resource studies, and similar documents that have pinpointed the importance and scope of archeological and historical values that exist within Alaska's parks. While important, these publications have been distributed to a relatively small and specialized audience of park managers and cultural resource professionals.

In order to broaden public knowledge about the gold rush-era in Alaska's parks, the region's Cultural Resources Advisory Committee decided in early 1997 to publish a pamphlet series that spotlights the century-old mining activities in six of Alaska's national park units. The text and graphics for the "gold rush centennial brochures" were produced by the various park cultural resource specialists. The brochures were distributed to the parks to be used at their discretion.

The brochures, which are available to Alaska's park visitors, should play a key role in

educating the public about the history of gold mining in Alaska's national parks. These new publications should also help visitors understand that Alaska's parks offer exciting history as well as outstanding scenic and wildlife values.

Frank Norris is a historian at the Alaska Support Office in Anchorage. During the 1980s, he spent several years at Klondike Gold Rush NHP in Skagway. He is the author of an administrative history of the park, and the co-author (with David Neufeld of Parks Canada) of Chilkoot Trail, Heritage Route to the Klondike, *published by Lost Moose Press of Whitehorse in 1996.*

Greg A. Brick, Robert M. Thorson, and David A. Poirier

Geoarcheology of the Jinny Hill Mines

Traditional geological methods such as petrography, field mapping, sediment coring, and particle-size analysis, were used to investigate the Jinny Hill mines, a 19th-century industrial archeological site at Cheshire, Connecticut. The Jinny Hill mines were the first barite mines in the United States, and the deepest (600 feet) and most extensive vein mines (four miles of passages) in Connecticut. Despite the impressive scale of the historic mining operations, many landowners were unaware of its former existence. These superlatives also contrast oddly with the near invisibility of the mines today, providing a case study in the ephemerality of this industrial landscape.

Barite, also known historically as barytes, heavy spar, tiff, and cawk, is barium sulfate. Derived from the Greek word for heavy, barite is one of the heaviest nonmetallic minerals with a specific gravity of 4.5. It is most often white in color, soft (3 on the Mohs scale), has three cleavages, and is relatively inert. Barite was discovered in Cheshire about 1813 and was mined there from 1838 to 1878. The Cheshire barite district was comprised of the Jinny Hill mines and the smaller, short-lived Peck Mountain mines. The total production of 160,000 tons came mainly from Jinny Hill. From Cheshire, barite was transported to New Haven via the now-defunct Farmington Canal where it was milled, affording the sole American supply (during the early years of the operation) for use in the manufacture of white paint.

The climax of mining activity came shortly after the Civil War, when several companies mined the deposits simultaneously. The majority of the miners were Cornish immigrants who had come to this country specifically to work underground. Eventually it became uneconomical to mine the deposits.

No field investigations of the historic Jinny Hill mines occurred before Crawford E. Fritts, employed by the United States Geological Survey in the late 1950s, mapped the bedrock geology of the Mount Carmel quadrangle. Fritts identified three parallel veins of barite, historically known as

Surviving ox-cart road for transporting barite from the Jinny Hill mines to milling operations in New Haven.

the north, central, and south veins. The locations of then-observable mine entrances (shafts and adits), mine dumps, and prospect pits were noted. Today, one is challenged even to locate the mines, so effectively have natural processes and residential development obliterated their surficial indications. This situation has created potential safety concerns with town officials and neighborhood residents. These concerns were explicitly addressed by the on-site research of the Department of Geology and Geophysics at the University of Connecticut.

Rediscovering the Jinny Hill Mining Complex

Mid-19th-century accounts provide the earliest written record of underground barite mining at Jinny Hill, at which time the mines were 200 feet deep. A decade later, firsthand descriptions of the underground workings noted that its 400 foot depth was accessed by two distinct shafts. An 1892 reference indicates the presence of Cornish miners at Jinny Hill.

The Jinny Hill mines achieved a final depth of 600 feet with half a dozen shafts when abandoned, a modest accomplishment by Cornish mining standards. By 1938, the overgrown mine dumps at Jinny Hill had become a locally-known mineral-collecting locality.

Annual reports, company records, and contemporary accounts have not been found despite Brick's extensive archival research. Furthermore, local newspapers did not began publication in Cheshire until after mining had ceased. Thus, geoarcheology became an important source of information for understanding the history and technology of the Jinny Hill barite mine.

Clues from a Remnant Landscape

Neither vertical (shafts) nor horizontal (adits) mine entrances were observable. In addition, no mill or other structural foundations were observable. Surficial evidence suggests that the Jinny Hill barite mining operation were generally "low tech" in comparison with contemporary mining sites.

Mining operations were physically represented through the existence of sinkholes, that is, surface depressions which exhibit downward collapse, i.e., the ability to "swallow" objects over an interval of time. In order for collapse to occur, there must be an open mine void below; sinkholes are thereby distinguishable from prospect pits, which are bedrock-floored. Based upon interviews with landowners, the majority of sinkholes at Jinny Hill represented shafts, although some appear to represent collapsed mine passages.

Lines of sinkholes were mapped in the field, confirming the linear geometry and depth of the Jinny Hill ore deposit. The largest sinkhole at Jinny Hill, about 10 meters across, marks the location of

the middle shaft of the central vein. The current property owner indicated that many years ago this shaft was open and later was filled with trees felled by the 1938 hurricane. This former sinkhole presently contains extensive landscaping debris.

The south vein shaft is represented by a sinkhole about four meters across. Local residents remembered dropping pebbles down this shaft, which was open at that time, waiting to hear them splash in water at the bottom of the shaft, seconds later. The shaft was filled in the 1960s when a bulldozer pushed tree stumps into it. In 1973 after heavy rains, the sinkhole opened to a depth of fifteen feet and necessitated further filling.

There is also a shaft into the north vein, represented by a sinkhole about four meters across. The landowner noted that the Town of Cheshire brought in fill, but the hole reappeared. Interestingly, this may have been the shaft referred to in an 1850 account of a minor cave in, which trapped miners underground for an entire day. Road construction in the Jinny Hill area has occasionally exposed adits or mine-related structures.

An attempt was made to reconstruct the transport system of the Jinny Hill mining era, i.e., the ox-cart routes used by the miners for transporting barite from the mines to the canal or railroad, by mapping unimproved roads that contained barite fragments in the road bed. Possible road beds were examined by trenching across the width of the road with a shovel. The most visible artificial landscape feature created by mining is an unimproved road, about 800 meters long and two meters wide, located in vicinity of the central vein. Runoff has gullied the road in several places revealing barite fragments in the road bed. The

eastern half is impassable to vehicles, but is clearly delimited by mature trees to either side. This road crosses a wetland on a causeway of rock waste and then dwindles to a footpath. Shorter fragments of additional unimproved roads that appear linked to the mining operations were also identified throughout the Jinny Hill neighborhood.

The locations of mine dumps or tailing heaps were identified and mapped. Although seven mine dumps had been observed in the 1950s, only three were relocated. Local residents indicated that the tailing piles had been subsequently "mined" as readily obtainable fill for road improvements or house foundations. In contrast to the once-extensive mine dumps, small isolated mounds of mine tailings survive throughout the Jinny Hill area. In the hope of locating mine-related artifacts, the mine dumps were swept with a portable magnetometer. A lime-encrusted boiler fragment, possibly part of a steam engine for raising ore or dewatering the mine, was discovered within the mine dump associated with the central vein.

Anthracite coal was found scattered throughout the mine dumps. Importantly, coal fragments were found in the Parker wetland where they were associated with barite particles indicating contemporaneity. The coal is tentatively interpreted as fuel for the mine's steam engines.

Several mine-related features were conspicuous by their absence. No shot-holes, whether machine or hand-drilled, were found on outcrops or rock waste at Jinny Hill, even though it is likely that explosives were used for the deadwork (passages through barren country rock, providing access to the ore deposit itself). Although streams were sometimes dammed to store water for dressing ores, no hydraulic workings were found. Despite extensive field studies, little new information was obtained regarding the technology of mining within the Jinny Hill district; such data await more intensive geological and archeological investigations.

The Barite Anomaly

Because the original volume of the barite deposit at Jinny Hill was insignificant relative to that of the surrounding rock matrix, barite has a low background concentration on the land surface at Jinny Hill. Thus, any feature associated with barite fragments has a high likelihood of being associated in some way with barite mining. Quite simply, concentrations of barite equate with evidence of the historic mining operations. The boundary between an area containing the distinctive white barite fragments and that which did not became the most significant heterogeneity in the field.

Based upon a previous discovery of barite silt in a wetland downstream from the Jinny Hill mines, Thorson predicted that wetlands downstream from the Jinny Hill mines would exhibit a distinct, barite-rich interval, formed as a result of a pulse of mine sediment passing through the fluvial system during the mining era. Three wetlands likely to have retained mine sediment were selected for sampling in the vicinity of the south vein dump. These wetlands were, from north to south, the Parker wetland, the Clouse wetland, and Fresh Meadows Wildlife Sanctuary. Expectations were that these wetlands might provide a vertical, temporal sequence to complement the horizontal, spatial dimension of the barite distribution provided through the mapping of mine-related features.

Examination of wetland stratigraphy included excavation of a soil pit in the Parker wetland, a red maple swamp, located immediately downstream from the south vein. This led to the discovery of a brilliant white layer of barite sediment, 5 to 20 centimeters thick, that was located beneath 20 centimeters of topsoil. Below the barite horizon were alternating layers of arkosic sand and silt which were located above a wood-rich organic paleosol.

The stratigraphy of the Parker wetland was interpreted as a fluvaquent overlying a buried paleosol. Presumably the paleosol predates European settlement, while the fluvaquent resulted from post-settlement land use practices, such as deforestation. The barite horizon, representing the mining era, was depicted as a single, well-defined C horizon in the soil profile.

Through soil augering, the barite layer was found to underlie most of the Parker and Clouse wetlands and was traced upstream from the Parker wetland to the south vein dump. Conservatively estimated from planimetric measurements on the Town of Cheshire's topographic survey, the barite layer underlies about three acres of wetlands. Estimating the average thickness of the layer to be 20 centimeters, it's calculated that there are about 2,500 cubic meters of barite sediments downstream from the south vein.

To determine which size-fraction barite had been water-transported from the mines to the wetlands, a sample from the Parker wetland barite horizon was wet-sieved. In larger mesh sizes, barite particles are readily distinguished from reddish (iron-stained) grains such as, quartz and feldspar, by their distinctive white color. When examined under a petrographic microscope, barite particles are distinguished from other particles by the exhibition of dispersion fringes (also known as Becke lines), lack of relief, and cleavage pattern.

Barite particles from the Parker wetland barite horizon fell into the fine sand and silt fractions (Unified Soil Classification). Most petrographic views of smear mounts of material taken directly from this layer contained 100% barite par-

ticles. Occasionally, particles of anthracite coal were encountered.

Having determined that barite had been transported in the silt fraction, samples from soil horizons above and below the Parker Wetland barite horizon were gathered and removed to the laboratory to be examined for the presence of barite silt. Standardized portions of each sample were wet-sieved to isolate the silt fraction from everything coarser. The silt was concentrated for barite using a gold pan. As a tool for heavy-mineral separation, panning has advantages over heavy-liquid separation techniques in terms of time and cost as well as the avoidance of toxic heavy liquids.

The pan was filled with water and the natant organic matter was decanted. Panning involved shaking the grains down to the angle of the pan and gently swirling the tilted pan. Barite particles appeared as a milky "flash" at the upper leading edge of pan concentrates, because the higher specific gravity of barite caused it to lag behind relative to the lighter, reddish grains. Petrographic methods were used to verify that the flash was indeed barite. No barite silt was detected below the white horizon, while only trace amounts were present above it.

The barite anomaly in the soils of Cheshire thus became an index of the historic mining activity. When mapped in space (horizontal) and time (stratigraphically), barite fragments were the key to reconstructing the mining site. The Jinny Hill mines were found to be a palimpsest of three successive operations: 1) copper prospecting, 2) underground barite mining, and 3) gravel quarrying. What was perceived as worthless in one phase, became a resource for the next. Most notably, the concentrated tailings from the barite mining became an economically important 20th-century gravel operation, which served to mask the prior presence of the barite mines.

Geoarcheological Reconstructions

A strong relationship exists between the geology of the barite ore deposit and the methods used to exploit it at Jinny Hill. The type of deposit suggested that underground mining would be required. In practical terms, mapping the Jinny Hill barite anomaly involved the identification of three kinds of features: mine dumps, mine roads, and wetlands downstream from the mines. Although the mine workings were inaccessible, field verification of mining shafts was accomplished by mapping lines of sinkholes. In addition, petrographic studies of rock outcrops revealed that no significant difference in mineralization existed; so the mine workings of the respective veins should be similar, all other things being equal.

The heaviness of barite and the brecciated character of the tailings suggested that to minimize freight charges miners dressed the ore near the mines. This was confirmed by coring wetlands downstream from the mines, where a layer of comminuted barite was found. The softness, cleavage pattern, and distinctive white color of barite suggest that field dressing the ore would not require anything more than hand methods, which was additionally inferred from the absence of mill foundations despite extensive field investigation. At Jinny Hill, where barite occurred in the interstices of a breccia, it would have been economical to remove as much of the valueless gangue (arkose) as possible to avoid paying freight charges to New Haven on waste rock. Hand picking and washing cannot account for the large volume of barite silt found in wetlands downstream from the Jinny Hill mines. Milling, which might otherwise have accounted for the fines, was carried out at New Haven. This suggested that a third, hitherto undocumented, form of dressing had been performed at Jinny Hill. It was simplest to assume that this involved the liberation of barite from gangue followed by the separation of the two. Specifically, this would have involved crushing the brecciated ore by cobbing (hammering), followed by hand picking to exclude the gangue. The distinctive white color of barite would have rendered it easy to distinguish from the reddish arkose.

Experimental studies conducted by Brick demonstrated that a simple dressing operation, crushing the brecciated ore by hammering, can generate abundant barite particles in the silt-fraction similar in size to those constituting the Parker wetland barite horizon. In terms of weight percentage, the amount of silt generated by Brick's experimental studies was less than 0.5 % of the weight of the specimens before cobbing.

The ore processing sequence was consistent with known documentary and field evidence. Ore was hand picked in the stopes by the miners. Unprofitable-looking pieces were used to backfill worked-out stopes, rather than being raised in the kibbles. The brecciated ore was cobbed at the surface to liberate barite from valueless gangue. A second round of hand picking separated sizable barite pieces from among fragments produced by cobbing. Barite pieces were washed in local streams to remove adherent dirt. Barite silt, inadvertently generated during cobbing, was borne away by the current and deposited in nearby wetlands.

In summary, geoarcheological field investigations and experimental material-processing studies undertaken by the University of Connecticut's Department of Geology and Geophysics provided important information on the Jinny Hill mines otherwise not available in the meager historical record for this early barite mining operation. Previously undocumented mine dumps, roads, shafts, adits,

and artifacts exist at Jinny Hill and collectively, establish a coherent pattern of deep mining based on the Cornish system. Also, historic archeological features, alleged through local folklore to belong to the mining era, were proved not to be contemporaneous. Reconstructing the ore-processing flowsheet for the Jinny Hill mines revealed that three distinct dressing steps, cobbing (liberation), hand picking (separation), and washing (cleaning), are required to explain the extensive barite horizon in neighboring wetlands.

Hydrological changes and subsistence threats in underground mining districts is a well-documented and nearly intractable problem nationwide. On a smaller scale, the problem holds true for the Jenny Hill barite mining district in Cheshire. The University of Connecticut's geoarcheological investigations provided significant new information to the Town of Cheshire concerning potentially unstable mining-related areas which should guide future town-based planning decisions.

References

Brick, Greg A. 1997 Geoarcheology of the Jinny Hill Mines, Cheshire, Connecticut. M.S. thesis, Department of Geology and Geophysics, University of Connecticut (Storrs).

Fritts, Crawford E. 1962 The Barite Mines of Cheshire. Cheshire Historical Society.

Thorson, Robert M. 1994 A Barite Tracer for sediment Transport in New England Watersheds: A Draft Proposal. Unpublished Ms., Department of Geology & Geophysics, University of Connecticut.

Greg A. Brick received his M.S. degree in geology from the University of Connecticut based upon his studies of the Jinny Hill mines. After working for the U.S. Army Corps of Engineers in St. Louis, he became editor for the National Water Quality News.

Robert M. Thorson is Professor of Geology and Geophysics at the University of Connecticut. His research in New England involves the reconstruction of hidden historic impacts on the wetlands and watershed and how these changes influence contemporary landscape processes.

David A. Poirier is Staff Archaeologist and Environmental Review Coordinator for the Connecticut Historical Commission (State Historic Preservation Office). Dr. Poirier has previously co-edited thematic issues of CRM *that have focused on archeology and the public and on forensic archeology.*

Arthur B. Cohn

Cow Heads and Trout Farms

Underwater Exploration of the Dalliba-Lee Mine

It was late fall, and our nautical archeology fieldwork on Lake Champlain was completed. I was looking forward to a few quiet moments for research and writing. It was a routine day when an unusual telephone request came in from the town historian of Port Henry, New York. "One of our townspeople was in his flooded iron mine feeding his fish (he raises trout in the mine) and, as he was out on his dock, he looked down through the water and thought he saw an ore cart. We heard you might be able to help."

Indeed, the Lake Champlain Maritime Museum endeavors to assist regional agencies with the management of underwater cultural resources and I wanted to respond positively to Port Henry's request. Besides, the story was so intriguing. Having been a professional diver since 1974, I have been privileged to dive in many interesting places, but I had never explored a flooded iron mine. How to begin?

The mine was known as the Dalliba-Lee mine, named for its first and last operators. James Dalliba had established the first iron foundry in the community in the early 1820s, just after the opening of the Champlain Canal, which connected Lake Champlain and the Hudson River. In fact, Dalliba had been responsible for naming the town Port Henry after Henry Huntington, his wife's uncle and his benefactor. I told the town historian Joan Daby that the first step would be to come over and just see the mine. An on-site inspection would allow me to get a sense of the physical layout: the distance from the road, conditions which would affect actually getting equipment to the mine, staging issues for getting in and getting out, visibility and water temperature, and the relative stability of the structure. With this information, we would be

Lake Champlain Maritime Museum team members, Art Cohn, Erick Tichonuk, and David Andrews (left to right), plan a dive at the Dalliba-Lee Mine. Photo by Alan Denney, courtesy LCMM.

able to decide whether it might be safe enough to proceed. If it looked feasible, I could begin to plan a simple exploratory dive. It was oddly coincidental that earlier in the year I had hiked to the entrance of another flooded iron mine overlooking the shores of Lake Champlain. I hoped someday to examine that flooded mine, but the logistics were horrible. One would have to ferry all gear by boat, then transport it up an almost vertical climb several hundred feet to the mine entrance. Exploration would require an extensive support team and an entire day just to get the equipment to the site. As I drove over to Port Henry, I had visions of a similar mountain-climbing challenge.

Port Henry, a town situated along the western shore of Lake Champlain, had reached its economic heyday as a 19th-century mining community. The community has witnessed economically challenging times since Republic Steel closed down the last mining operation in 1971. However, the Port Henry-Moriah Economic Development Zone Office had recently received a substantial ISTEA grant to renovate a former mining-related carriage house into a Railroad and Mining Museum as part of an effort to revitalize the town's economy. It was exciting to envision that a side benefit of our archeological investigation might be to provide some positive synergy for that effort. In particular, local residents wanted to know if the ore cart in the mine might be recovered for the new museum.

Once in the town center, I drove due west away from the lake into the hills that rise toward the Adirondack high peaks. I turned onto a residential street where I was greeted by Mike and Lena Aitner, the property owners, and a small delegation of townspeople. After appropriate introductions, I braced myself for a challenging hike to the mine. We walked out past the Aitner's home down a path around a rocky hill, and within minutes, we were at the mine entrance. We had traveled no more than 100 yards on relatively level ground; approaching the mine would not be a problem. The mine had two openings, both enclosed by Mike Aitner to control the "marine environment" for his trout farm. The mine's entry was predictably dark, but Mike had installed electric power and lights for his fish operation and a floating pier so that he could easily manage his floating fish pens. Based on these unusual circumstances, I knew that an exploratory dive was feasible and required only minimal planning in order to execute a safe, introductory fact-finding dive.

Having never dived in a flooded mine, I decided to adapt familiar wreck and ice diving procedures. Project goals were extremely modest: to be able to enter the shallow entry area without silting it in and to explore the area where the ore cart was supposed to be. This preliminary evaluation could be accomplished within the open entry pool area, which made it a non-penetration dive. After reconnoitering in this area and if the conditions seemed right, it would permit consideration of further, more complex investigations. I prepared a penetration line with one end secured to my diving harness and the other end tied to a substantial tree outside the mine. Several experienced team members functioned as line tenders and safety divers, similar in arrangement to an ice diving situation. Team members were properly suited up and had established a second penetration line, which would allow them to come to my aid if the need arose. The plan was for person-to-person communication when I surfaced after my initial exploration of the entry pool area; alternatively, we would use traditional line pulls to communicate if I chose to further investigate the mine.

As a planning precaution, it was requested that local emergency personnel with suitable communication equipment be present at the mine. Prediving organization occurred on tarps on level ground just outside the mine, i.e., ropes were arranged, first-aid and oxygen equipment (standard on any dive operation) set up, equipment assembled and checked, the team oriented to the site, and the dive plan reviewed for final time. After we had talked everything through and could not think of any additional adjustments, we proceeded to gear up for the dive.

A professional diver is trained to control anxiety, but I must admit that I was excited and even a bit anxious as I prepared to enter this uncharted territory. The water seemed clear, although in the enclosed mine environment it would be the equiva-

lent of a night dive. Water temperature would be 40 degrees and would require wearing a dry suit. I was equipped with a single steel 94-cubic-foot tank of air, with a redundant 20-cubic foot pony-bottle back-up air system. I planned to use a single powerful dive light with two additional lights attached at various places for emergency back up. I had a dive knife to deal with any entanglements. As I sat on the floating dock letting my handlers secure my mitts and do the final gear check, I focused on our principle concerns: 1) avoiding any undue disturbance of silt within the mine, which would trigger an early termination of the dive; 2) evaluating the structural integrity of mining-related features every step of the way; 3) not moving forward until it was assured that the mine was secure; and, 4) making sure my line connection back to the safety of the mine entrance was intact.

Questions about what I was about to encounter flew through my head. Would there be shoring timber holding up an unstable roof? Would the silt of 120 years of disuse make visual exploration impossible? Would there be a passageway that penetrated endlessly into the center of the earth? Because of these unknown conditions, we limited the exploratory dive to 150 feet, the length of the safety line back to the surface. As an additional precaution, I would take no camera or recording clipboard as I wanted 100% of my senses available to look for possible hazards. All information on this dive would be gathered by empirical observation, which if the circumstances warranted, would be used to plan subsequent dives.

After inflating my buoyancy compensator so that I would stay as close to the surface as possible in order to minimize the chance of disturbing of silt, I rolled in and looked downward in order to take my first glimpse of the conditions and received a surreal shock. As my eyes became accustomed to the watery darkness, my dive light revealed cow heads, dozens of cow heads, scattered on the bottom all around me. I began to laugh—of all the things I had braced myself to deal with, cow heads were not on the list. I surfaced, inquired if anyone might be able to account for their presence, and was informed that they might be left over from a slaughter house which operated in the area some years ago. Filing that away as an unforgettable experience, I began to explore the mine. Mike Aitner had been right; not far from the floating dock was an intact ore cart siting on two wooden rails. The rails descended into a cave-like shaft further into the mine.

The submerged mine entrance area was littered with debris. In addition to the cow heads, there were wagon wheels, pieces of horse-drawn equipment, intact bottles, branches, and modern equipment from Mike's fish operation. The bottom was silty and I made a significant effort not to unduly disturb it. Once I completed the examination of the entrance area, I concluded that the structural stability of the upper mine allowed further downward investigation of the mine. Visibility also remained reasonably good (about 10-15 feet). The mine's cart tracks were a pleasant surprise, since they served as both a travel route and a central reference point for examination of the mine shaft. The dive complexity changed with the descent in that movement was now limited by rock overhead. Evaluation of the condition of the mine ceiling became a priority. Structurally it looked fine, but I noticed a potential concern. As my exhaled bubbles floated upward to the mine ceiling, a light dusting of iron-stained particles rained down into the water column. I suspected that these particles would begin to limit visibility and that the further the descent, the poorer the visibility would be on the return route.

"No problem," I reasoned. Much of my career has been spent documenting historically significant shipwrecks in conditions of very limited visibility. With a safety line and the cart tracks to guide me, I felt confident that I could explore the mine at least to the limit of the safety line and return to the entrance. I continued down the tracks, sweeping out to either side then back to the tracks, which were composed of heavy timbers scarfed together, but which had separated in

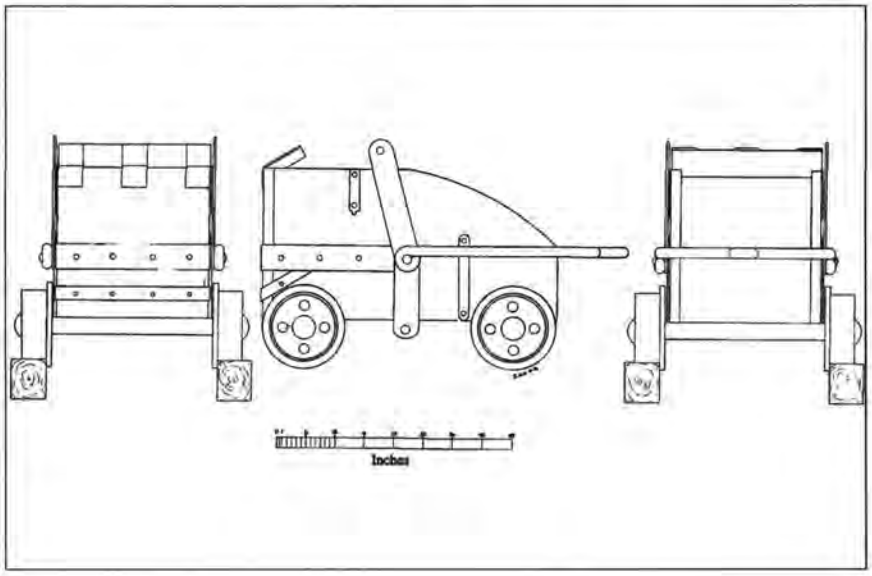

Preliminary views of the ore cart in the entrance chamber of the Dalliba-Lee Mine. Left to right: back, profile, and front views. Drawings courtesy of Scott McLaughlin.

places. The dive had commenced about 75 feet down the sloping tracks, when they abruptly ended and the mine bottom leveled out. Unfortunately, the iron "rain" from the mine roof became concentrated at the bottom of the mine shaft and visibility, in places, was reduced to zero.

On one side of the cart track, the mine appeared to expand into a large room or chamber, while straight ahead there seemed to be a shaft that continued further into the mountain. On the other side of the chamber, I discovered a debris field with mining equipment and boards near several vertical shoring timbers (oak, I thought). The timbers appeared to separate the main shaft from a small room-sized area, which contained the remnants of a large wooden box. Heavy oak planks that had once been fastened to the vertical timbers were mostly lying on the floor, apparently having fallen as oxidation caused their iron nails to crumble and the planks fell under their heavy weight. I quickly realized that the remaining planks were a potential hazard, and comfortable with the initial examination, I slowly followed the tracks back to the ore cart that had started it all. Upon surfacing, I reported all that I had seen and quickly sketched it to get as much down on paper as possible before I forgot the details. I also had to confront the next challenge of the dive: what professional recommendations could be offered to the people of Port Henry.

Making management recommendations about submerged cultural resources is one of the Lake Champlain Maritime Museum's missions. The people of Port Henry were justifiably excited about the archeological potential that the mine represented, especially in light of their current efforts for a new mining-related museum. Taking stock of the mine's condition, its archeological potential, and the town's efforts to use its history as an economic stimulus, the Dalliba-Lee mine warranted further investigation and documentation. We encouraged the involvement of local high school students in building a replica of the ore cart for an exhibit and combining students and historical society members to further research the mine's history. By involving students and citizens, we envisioned a broad community effort in the investigation and interpretation of the Dalliba-Lee mine.

Comfortable with the stability of the mine, the Lake Champlain Maritime Museum selected several experienced archeological divers to map, draw, and photograph what I had already seen. However, safety concerns existed about the roof-silt problem and the heavy planks still hanging on the vertical timbers. I also wondered if those timbers had been expressly placed there to shore up an unstable ceiling. The foremost research-related concern focused on defining the limits of the large room and the potential tunnel that began at the bottom of the entry shaft. It was unclear from the initial dive how much penetration would be required in order to fully explore the mine's extremities. To proceed further would require additional technical training.

As a diving instructor since 1974, I have always taught divers to know their limitations and dive within them. I felt that moving out to explore these undefined mine areas was pushing my procedural envelope. The flooded Dalliba-Lee mine became the catalyst for taking an intensive week of instruction in technical cave diving procedures. It was just what the situation required, and at the conclusion of the cave training, I felt comfortable with continuing the examination at least another several hundred feet further into the mine. The Lake Champlain Maritime Museum would ultimately stage two additional documentation dives.

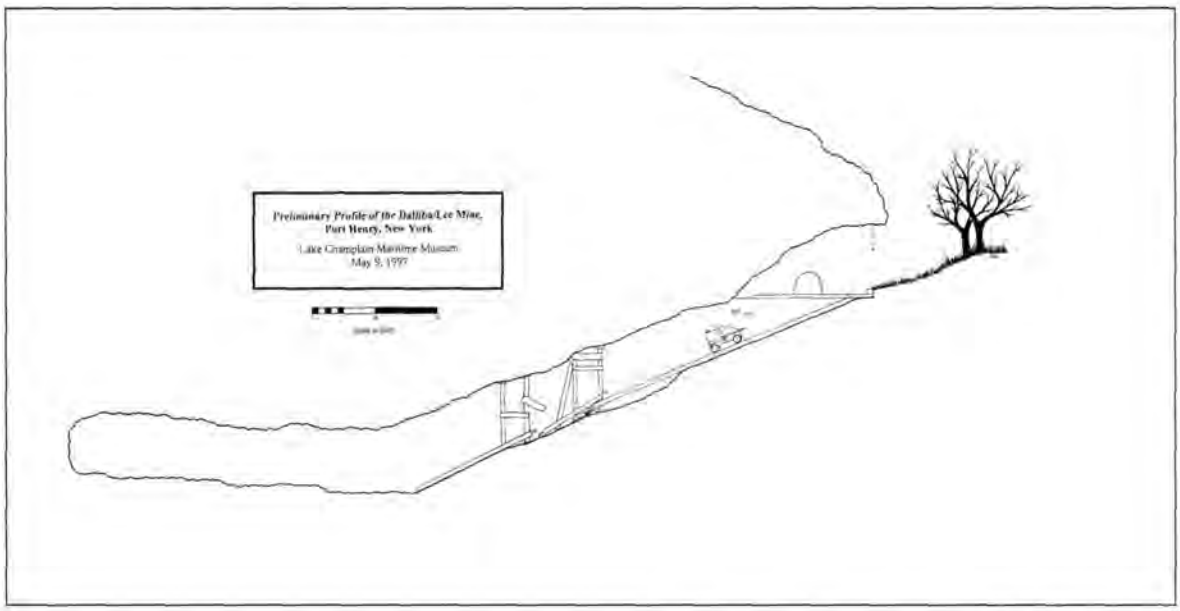

Using cave diving techniques, particularly penetration line procedures, a permanent travel line was established that followed the now-defined wooden tracks. Excursions using line-reels would depart from the tracks to define the limits of the chamber and the suspected shaft. We were both relieved and disappointed with the results. The large chamber, where ore had been mined until the 1870s, was found to extend in a semi-circular arc approximately 75 feet from the end of the track. The shaft, which I had envisioned as penetrating hundreds of feet into the depths of the mountain, petered out approximately fifty feet from the end of the cart track. The extreme limits of the mine were actually only slightly larger than the area the initial dive had covered.

We now set out to complete a preliminary mapping of the mine and to document its significant features. During the two documentation dives, still photographs and a video tape recording of the interior were completed. The debris fields at the mine entrance and at the base of the track were mapped. The ore cart and the track were recorded *in situ*. The anticipated deterioration of visibility in the mine from the ceiling particles that I had observed clouding up the water column on the first dive never materialized. Apparently, the oxidation that caused those particles was a slow event. The first dive had cleared out most of the loose material and, during the remaining dives, overall visibility remained acceptable.

On our last dive visit, students from the Moriah High School history club made a field trip to the mine and discussed with the team what we were doing and how we were going about it. We again encouraged their participation in future community-based historical research.

The Lake Champlain Maritime Museum completed a report and recommended that the school and the historical society collaborate in a comprehensive research effort that could be used for the basis of interpretation at the new museum. We also recommended that this research include interviews with local residents who participated in iron mining until it ended in 1971. We further encouraged the high school to think about building a replica ore cart, which along with our photographs, drawings, and video footage, could be woven into an interesting exhibit. The Lake Champlain Maritime Museum identified a number of unresolved questions concerning the material in the mine as well as the functions and origins of some of the features of the mine. More field and archival research, executed in conjunction with the development of the museum, was identified as a preferred approach. For conservation and economic reasons, we concluded that immediate recovery of objects submerged in the mine was not recommended at this time.

Since our dive project, Port Henry has received an additional grant which allowed it to interview local residents who were directly involved in the iron mining industry. In addition, students from Mike Aitner's shop class have completed a scale replica of the ore cart, which was the catalyst for this project. All of these will be used to help develop the first round of exhibits. We hope that the Dalliba-Lee Iron Mine and our investigation of it will add a different perspective to the public interpretation of the community's mining history as the museum is established.

Investigating the flooded iron mine at Port Henry was an interesting logistical and diving challenge. In hindsight, we were clearly operating at the edge of our experience level while trying to stay true to our primary objective, diver safety. Flooded mines pose significant potential hazards with obstructions, limited visibility, and unstable features. On the other hand, the Dalliba-Lee mine turned out to be a perfect place to gain suitable experience. It was relatively small, stable, and archeologically interesting, although our success in this case does not mean that the Lake Champlain Maritime Museum is ready to specialize in this potentially hazardous activity. I think any future flooded mine project will need to evaluate the same issues. Diver safety and the stability of the flooded mine environment are the most important criteria when considering any field examination, along with the experience and training of the archeological divers (don't kid yourself here - experienced divers die in caves each year) and finally, the archeological potential of the site.

The Lake Champlain Maritime Museum and the Town of Port Henry had a mutually successful project and we were very lucky. The Dalliba-Lee mine was the perfect place to explore the complicated issues that surround potential underwater study of a flooded mine. Since that investigation, the Lake Champlain Maritime Museum has received other invitations to explore flooded vertical mine shafts and other nasty places, and we have respectfully declined. Safety and caution must be the primary guide for this unusual environment.

Arthur B. Cohn is director of the Lake Champlain Maritime Museum at Basin Harbor, Vermont. Mr. Cohn is on the adjunct faculty of the University of Vermont and the Institute of Nautical Archaeology at Texas A&M University. He was recently appointed to the National Park Service's National Maritime Grants Advisory Committee.

Robert D. Higgins

A Tale of Mines, Prospectors, and Native Americans

The Making of Glacier National Park

It all began innocently enough as a walk in the park with five colleagues and friends on a September day in 1991. Ed Gensler (State of Montana geologist), Philip Cloues, Janet Wise, Dave Steensen and the author, all from the National Park Service, Denver Office, were in Glacier National Park to investigate abandoned mines. On this particular day we had decided to take the 13-mile round trip hike from Many Glaciers to the Cracker Mine, the largest of the old abandoned mining operations in Glacier. Little did I know that we would not only cover the physical distance, but would venture back in time a hundred years.

It turned out to be a wonderful hike. The day had everything of fall about it; a frosty morning, everyone clad in warm jackets drinking hot coffee and anxious talk about the long day's hike in the Park's magnificent mountains. We started on a well-worn dirt trail that went modestly up and down through the wooded pines around Many Glaciers. We soon got to switch-backs, steeper terrain and crisp smelling alpine vegetation. We moved along the trail and the tall pines gave way to tundra-like vegetation as we slogged upward with the pronounced steep grade. We came out of the vegetation to an area above the tree line, turned a corner, and were rewarded by a magnificent sight.

Overlook of Cracker Lake from the Cracker Lake Trail.

In the cradle of these ice carved peaks of the Northern Rockies was a glimmering blue lake which seemed to be enjoying those last sun soaked days before the icy grip of winter rendered the water immobile. Off in the distance were the waste rock piles of the mine and some bent and twisted pieces of machinery punctuated with weathered pieces of once wooden structures. We soon reached our destination.

Since none of us had been here before or knew what to expect, I remember there was a sense of excitement that comes from a discovery experience. We clammered up and down the waste rock piles, climbed on the old rusted boiler, and poked around the metal gears, pipes, and gray-brown wood of what was left of the collapsed mill. And yes, we carefully entered the open mine workings and explored its passageways with lighted lamps atop our hard-hats, prybar and gasmeter in hand. We had lunch and reflected on our good fortune to be hiking on such a perfect day in Glacier National Park's mountain country and to be at this long-abandoned and forgotten mine. We then came back to Denver and wrote these few bureaucratic paragraphs in a government memorandum that was destined to die in battleship gray file cabinets that occupy space in various National Park Service offices:

> The Cracker Mine Site is located on the southeast shores of Cracker lake near the campsite. It is easily seen from the hiking trail. The lower portal is closed from caving and the upper portal is open. The mine appears to be a destination point for hikers as candle wax is found throughout the mine workings. Although the rock in the mine is generally competent, there are a few areas with sufficient cracks in the rock to warrant concern of a possible rock fall from the ceiling. A recommended closure method would

consist of a 40-inch thick rock and mortar wall at the entrance for an estimated cost of $650.00.

If the historic significance merits interpretation, and the park wants visitation underground, then the mine should be periodically inspected by qualified personnel and loose rock barred down and then removed to prevent hazards from unstable footing. There are no shafts nor stopes (large rooms) underground and the air quality was good.

The remains of the old mill site consisting of rotting timbers and rusty mill equipment (e.g., jaw crusher, steam boiler, trommel, etc.) are located on the shore of the south end of the lake. The remoteness of the site and the early establishment of the park has prevented this rare find of historic equipment from being melted down for scrap during World Wars I and II. The equipment represents a cultural resource opportunity for interpretation directly connected to the formation of the park.

This one-day excursion to the Cracker Mine peaked my curiosity and prompted me to find out more about the mine and the story of how that related to the creation of Glacier National Park. The tangible objects left behind by past generations, like crushed structures, rusting metal and underground diggings at long abandoned mines, such as the Cracker, can cause us to reflect on the people who were there and the human events of the time. The following story has many of the elements we associate with the Old West, Cowboys (or girls in this case), Native Americans (the Blackfeet), the Cavalry and Buffalo soldiers (African-American troops), a massacre of Native Americans, a railroad and railroad baron, prospectors, miners and mining, a gold rush, a boom-and-bust town, an Act of Congress, and finally a national park.

If our investigation party had been in the area a century earlier (1891), we would have found an interesting scene. The talk would be of the railroad baron James J. Hill building the Great Northern Railroad through the area and if he would get it built over Manias Pass before the winter snow. There would be much discussion over the comparison of the three new saloons in the boom town of Altyn. And yes, there would surely be much talk of Dutch Lui's prospecting and mineral discoveries on the Blackfeet Indian Reservation. Everybody thought the best gold deposits were on lands legally forbidden for non-Indians to prospect.

The period after the Civil War until the creation of Glacier National Park (1865-1910) brought men to the region with intentions of acquisition and exploitation. The American West

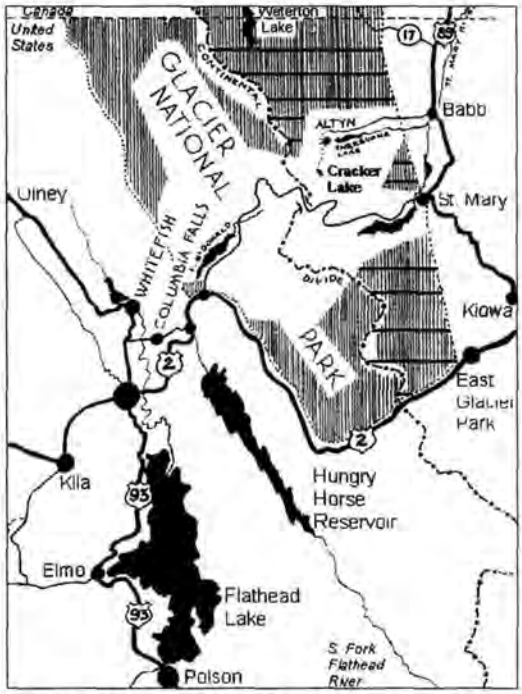

embodied the ideals of free enterprise and untamed capitalism. It was a time when people believed they could better themselves from their own hard work. It was a time of optimism.

The search for mineral wealth in the Rocky Mountains was well under way in the 1860s. Many men moved west after the Civil War (1860-1865) to seek a new life and forget the bloody battlefields of the east. The history of early Montana settlement is the story of one gold, silver, or copper rush after another. The big strike was just over the next mountain or just up the next draw. The first major mineral strike in Montana was in 1862 when gold was discovered. The following year there were several more discoveries and "gold fever" became contagious. By 1864 there were enough people in Montana to achieve territorial status.

During the period of 1865-1869, there were a number of gold strikes in British Columbia and Saskatchewan, Canada. As a result there were prospecting parties that passed through the northwest mountains of Montana, the Glacier Park area, on their way to Canada. One such party of prospectors led by Joseph Kipp explored the St. Mary's Lake region in 1869. These prospecting parties did not stay long in the area because this was Blackfeet Indian Country. The reservation was established in 1855 and had a mountainous and plains section. The Blackfeet were a viable force in the area and they did not take kindly to intrusions into their territory. There were numerous reports of white men being killed by hostile Indians—or was it land grabbers being killed by Indians defending their ever shrinking homelands.

Native American opposition to this intrusion of prospectors to this mountainous region came to

a disastrous end in 1870. It was a year of escalating incidents coming to a head. The Native Americans killed one of the early Montana settlers, a man of some renown at the time, and a cry rang out in the territory for retribution. Major Eugene Baker, U.S. Cavalry was dispatched to punish the Native Americans. He surprised a smallpox-ridden Blackfeet camp and killed nearly 200 individuals. The controversial "Baker Massacre" ended Blackfeet resistance along the Montana Front Range. The massacre, combined with smallpox epidemics, the introduction of liquor, and the increasing number of settlers moving into the area had the effect of destroying the fabric of Blackfeet society. A once powerful force in the region and deterrent to prospecting, mining and settlement was neutralized.

In the 15 years following the Civil War (1865-1880), significant changes in the region of Glacier's mountains occurred. The Blackfeet tribe was reduced from a position of power to a people racked with disease, poverty, and despair. Prospectors who were initially intimidated by the Indians roamed freely through the region. The official boundary survey party came and went having defined a lasting boundary between the two countries. Army reconnaissance parties were sent through the area to gather mostly geographic information adding first-hand reports of the undocumented territory. They reported a formidable wilderness with spectacular scenery.

Collapsed Cracker Mill and bull wheel.

During the decade of the 1880s, the plight of the Blackfeet continued to worsen. In 1882, the last of the buffalo were killed and so went a way of life for these Native Americans. Starvation followed, and soon the Blackfeet were almost totally dependent on government aid. Prospectors began a more intense exploration of the mountains west of and adjacent to the reservation. Shows of gold, silver and copper gave rise to speculation of even richer veins on the eastern side of the Continental Divide on tribal land. To make matters worse, in 1886 an Indian Agency clerk outfitted prospector Dutch Lui to explore in the Swift Current area (now Many Glaciers) of the Indian Reservation, clearly an illegal activity. Dutch Lui's prospecting efforts were successful and he returned with copper ore. Word spread through the mining camps and soon there were other prospectors disregarding the "off limits" status of the Indian Reservation in their search for mineral wealth. The pace began to pick up when a local town newspaper reported that Dutch Lui had a strike on the Continental Divide at the head waters of Copper and Quartz Creeks.

During the same period of time the area was substantially opened up by the coming of the railroad. The remote wilderness of Northwest Montana was destined for change. The Great Northern Railroad began to be built along the Middle Fork of the Flathead River from the east to Kalispell in late 1891 and later was completed all the way to the west coast.

In the early 1890s, there was considerable mineral exploration activity both legally on the west side of the divide and illegally on the east side. It is reported that over 2,000 mining claims were staked in what is now Glacier National Park by 300 individuals. Most prospectors were not what we would consider professional miners. They were a ragtag cross-section of adventurers lured to the area by "gold fever." One of the most notable of these was Elizibeth Collins, wife of a local rancher, dubbed the "Cattle Queen of Montana." She was to oversee the staking of many unsuccessful mining claims on Glacier's west side. She was a notorious character and was said to have drowned a man while in a heated, drunken argument on Lake McDonald. Activities of the Cattle Queen and other less known prospectors on the "West Side" began to put pressure on gaining access to the "East Side" of the Divide.

There was enough promise from prospecting that went on illegally on the Blackfeet Indian Reservation during the early 1890s, that Montana residents put pressure on Congress to open up the land for legitimate staking of mining claims. They were sure the Indian Reservation was the location of the next big strike in Montana. In 1895 George Bird Grinnell, William C. Pollack, and Walter M. Clements were appointed commissioners to negotiate with the Blackfeet over the sale of their mountain lands.

The Blackfeet Indian Reservation in the mountainous area east of the Continental divide was identified as the "Ceded Strip" and sold to the United States for $1.5 million. The deal was struck in 1896 and a Bill was written by Congress. The transaction officially took place by Act of Congress on April 15, 1898. The Ceded Strip includes all the lands in Glacier National Park east of the Continental Divide.

Between 1896 and 1898 when the land was still closed, prospectors tried to sneak into the reservation. They made themselves quite a nuisance and earned the name "sooners," because they had begun too soon. In a reversal of the normal role where the cavalry was called in to protect the settlers from the Native Americans, the cavalry was brought in to protect the Blackfeet on the

Close-up of Cracker Mill boiler with lake in background

reservation from the prospectors. Soldiers came from Fort Assiniboine, near present-day Harve, Montana, to keep the peace. For this unusual and thankless task, they used Buffalo Soldiers.

When the gold rush began at high noon on April 15, 1898, without hesitation the sooners raced into the area and staked their claims at previously located rock outcrops. Although the entire Ceded Strip was prospected, most of the valuable mining claims were clustered at locations on Rose Creek, Boulder Creek, Cracker Lake in the Swift Current valley, and above Slide Lake. Mining claims in most instances were long rectangular pieces of land, 600 feet wide by 1,500 feet long. They were identified on the ground, "staked," by marking the corners. This could be a blazed tree or more likely a four-inch square wooden post (stake) held upright by rocks piled around its base. Those posts were suppose to extend four and one-half feet above the ground.

The Cracker Mine perhaps represents the best mining property in the Ceded Strip which consist of the eastern half of Glacier National Park starting at the Continental Divide. The mine is at the south end of Cracker Lake at the base of Mt. Siyah, known at the time, as the Swift Current Mining District. It is reported that the mine had 1,300 feet of underground workings, approximately one-quarter of a mile. A mill was built at the site with steam driven equipment including a crusher to process the ore. A saw mill was also supposed to have been built in the area. This was a modest undertaking by that day's standards. Two prospectors, L. C. Emmonds and Hank Norris staked the mining claims on which the Cracker mine is located. It is said that the mine takes its name from a lunch of crackers and cheese these two prospectors had at the mineralized rock outcrop on their claims. The mining claims were staked in 1898 and then sold later that year to the Michigan and Montana Copper Mining & Smelting company. Machinery was hauled by wagon up a rough road to the mine in 1900, which put the mine well on its way to development. However, the death of Mr. Esker, the president of the company, in 1900 was cause for confusion and set-backs.

In 1901, everybody felt a railroad spur from the Great Northern Transcontinental Railroad would be built to the Swift Current Mining District, mainly because of the supposedly good shows of copper ore in the Cracker Mine. However, things did not work out that way and by 1902 mining ceased for failure to discover ore.

By 1902, most prospecting and mining activity in the region and in the Ceded Strip area had ceased. After the boom only a small number of consolidated claims remained. They included the Bulls Head group operated by the Josephine Copper Mining and Smelting Company in the Swift Current Valley; the Reid Mining Milling and Smelting Co. (known as the Van Pelt mining claims) on the North Fork of the Kennedy Creek (todays Slide Lake area); and, the Michigan and Montana Copper Mining and Smelting Company at Cracker Lake. The Cracker Lake mine was the largest and most promising of the mines and it was said the Van Pelt Mine was the only property developed by a "professional" miner. Van Pelt's story is classic: a drummer boy in the Confederate Army, railroad conductor for the Baltimore & Ohio for 20 years after the Civil War, lured to the west by gold fever, learned the trade of prospecting, then turned to speculator and financier. He worked his claims in the park until 1919, when he died. He was the last of the miners.

When the miners moved on to more promising areas, that left the government with a large chunk of land, the Ceded Strip, with no particular interest from the citizens of Montana. By 1910, when Glacier National Park was created, all the fuss about would-be mineral wealth had subsided in the face of hard economic reality. There was no loud voice left to tout the virtues of mining development. All that was left was what had always been present, a marvelous rugged mountain wilderness with breathtaking scenery. The meager scratching, rotting timber, and twisted rusting metal of human mining endeavors seemed insignificant against the mountains and valleys. So it is fitting that on this, the 100th year anniversary of the Act of Congress that created the Ceded Strip, we are able to recount its history and continued existence as part of the nation's abandoned mine legacy administered by the National Park Service.

Robert D. Higgins is coordinator for the National Park Service's Abandoned Mineral Lands Servicewide Program, Geologic Resources Division. Prior to transfer to NPS, he gained extensive experience with the Federal Energy Regulatory Commission, the U.S. Gological Survey, Mineral Management Service, and the Bureau of Land Management.

Art Gómez

If the Walls Could Speak

Mariscal Mine HAER Documentation

View of Mariscal Mine.

It is rare that a National Park Service central office employee has the opportunity to follow-up on a recommendation offered to a park nearly 14 years ago. In 1997, that very opportunity arose when the Historic American Engineering Record (HAER) invited me to serve as project historian for a 12-week documentation project at the Mariscal Mine in Big Bend National Park, Texas.

Located on Mariscal Mountain just north of the Rio Grande in the southernmost periphery of Big Bend National Park, Mariscal Mine—also known variously as the Lindsey Mine, the Ellie Mine, and the Vivianna Mining Company—is the best preserved ensemble of abandoned historic mineworks in the United States that represents the mercury mining industry. Virtually eclipsed by the post-World War II oil and gas industry, mercury, or "quicksilver," production dominated the mineral extraction economy of west Texas for more than a half century. With its earliest recovery in 1896, the combined districts of Terlingua, Maravillas, and Mariscal assured west Texas that it remain second only to California as the nation's preeminent producer of the liquid metal until the industry's decline in the 1960s.

My first brush with this marvelous resource came in the summer of 1984 when, as a temporary employee of the former Southwest Regional Office in Santa Fe, I included the Mariscal Mine in the Historic Resource Study that was drafted for Big Bend National Park. As part of my charge to offer management recommendations to the park superintendent and the unit's cultural resource management staff, I included suggestions that the park consider HAER documentation of the mine and its appurtenant buildings and structures.

In 1985, I terminated my position with the National Park Service upon completion of the Big Bend Historic Resource Study, only to return to Santa Fe five years later as Survey Historian after a brief stint as park historian at San Antonio Missions. To my dismay, I learned that Big Bend had been unable to initiate HAER documentation for the Mariscal Mine because of the projected expense. Little did I know that the dogged persistence of HAER Chief Eric DeLony, coupled with the more recent pledge of current superintendent, José Cisneros, to maximize protection of cultural as well as natural resources in Big Bend National Park, marshaled the long-awaited documentation of Mariscal Mine to completion in the summer of 1997.

In November 1990, Eric DeLony and nationally renowned metallurgist Noel W. Kirshenbaum visited the mine site with then Superintendent Jim Carrico, where they first discussed the possibility of a future HAER project in the park.

In early 1991, Jim Carrico's mantle of authority passed to Rob Arnberger, but the specter of impending reorganization throughout the National Park Service precluded further substantive discussions about the proposed HAER project. In the interim, the Mariscal Mine did not go unattended. Indeed, in March 1994, an interdisciplinary team of mining experts from the Mining and Minerals Branch, Land Resources Division in Denver and the Minerals/Oil and Gas Program in Santa Fe met in Big Bend to design a plan for the closure of numerous mine openings at the site. The project included a thorough site survey by geologist John E. Burghardt, in partnership with Santa Fe environmental specialist Linda Dansby and archeologist Charles Haecker, which produced an informative report, *Archeological Investigations: Mariscal Mine and Rio Grande Village Mine Portal Closures* (Haecker 1994), published by the Santa Fe's Intermountain Cultural Resources Center.

With the appointment of Superintendent José Cisneros in August 1994, discussions with Eric DeLony and HAER staff about the financial feasibility of a documentation project for the Mariscal Mine resumed in earnest. In early 1997, Cisneros announced funding for the $40,000-plus project, clearing the way to select a team to begin the field survey in May of that year. In keeping with HAER tradition, DeLony's office meticulously organized the project team that was to be assigned to Big Bend National Park. He first enlisted the services of Santa Fe mining historian Bob Spude to coordinate the project.

Next, DeLony recruited three experienced architects, Andrew Johnson from the University of California-Berkeley, who supervised the field survey team, which consisted of architectural candidate Chris Brown from the University of Washington, and ICOMOS member, José Peral López, a licensed architect from Seville, Spain. In an incredible twist of fate—14 years after my proposed recommendation to the park—Eric DeLony and Bob Spude invited me to serve as project historian to round out the team. Vital to the success of the project were two park staff: Chief Ranger Vidal Davila, who in 1982 was the first park employee to list the abandoned mineworks on the List of Classified Structures and Park Archaeologist Tom Alex, arguably the most experienced cultural resource specialist in Big Bend National Park. Finally, DeLony invited Don Hardesty, historical archeologist from the University of Nevada-Reno and an authority on early mining communities, to join the team as a consultant.

The team assembled in Big Bend in mid-May 1997 for its first on-site inspection. After more than two hours travel along the heavily-rutted Old River Road, we viewed the abandoned mineworks silhouetted against the harsh Chihuahuan desert. Today, literally only a shell of the mining operation remains to evidence nearly a half-century of social and economic activity on Mariscal Mountain. Located on the westernmost end of the site are the remains of the mining community that once housed an estimated 40-50 Mexican nationals. Rudimentary shelters stand in contrast to more traditionally built frame and masonry housing, all widely dispersed across the broad plain below the mine.

As we progressed slowly uphill, we observed fragments of ceramic tile that once shaped and connected the now hollowed-out limestone furnaces used during the earliest phase of the mining operation. Immediately overlooking the so-called Ellis retorts are an ensemble of structures that best represent the Mariscal Mine at its zenith. Most striking is the partially collapsed Scott furnace, unmistakably identified by thousands of mercury-soaked bricks that riddle the area immediately around the once massive structure. Equally imposing are three sentinel-like condensers whose sun-baked flagstone and concrete walls can be seen for miles when approaching the site. Behind this skeletal framework lay fragments of decayed timber and twisted metal, which suggest the labyrinth of wooden trusses and steel rails that once formed the ore delivery system to and from the mine located above. Near the pinnacle of the mountain stands the wreckage of the Vivianna Mine. Most impressive is the rust-covered fire box once used to fuel the rotary kiln. Also clearly detectable are the metal anchor bolts upon which operators fixed the main hoist in order to raise and lower the now heavily oxidized ore buckets, one of which lies nearby, dilapidated from years of disuse.

Documentary research on the structure presented some unusual problems. Only three photographs depicting the mine in actual operation are known to exist. This obviously presented the architects with difficulty in rendering a visual representation of the mineworks at the height of its operation. Fortunately, we knew that William Burcham, designer and superintendent of the Mariscal Mine, and Carl Schuette, his operations foreman, had years of experience both designing and constructing similar structures in the Terlingua District. In light of the limited number of photographs of the Mariscal Mine, the HAER team relied upon an abundance of historic photographs of contemporary mercury mines that were active in the Big Bend region. The architects compared these images against the measured physical remains at the Mariscal Mine, which they had accumulated during a two-week on-site inspection. Thus, during the course of the summer, a combined team effort produced the architectural renderings and historical narrative that met HAER's professional documentation standards. Upon reflection, my involvement in the Mariscal Mine project was both personally and professionally rewarding. My advice to other National Park Service historians, who have not engaged in a HABS/HAER endeavor, is by all means, do so. It is challenging, but gratifying work. However, I must further caution that you not wait fourteen years as I did to enjoy the experience.

Art Gómez is History Program Manager with the Intermountain Support Office, Santa Fe.

Photos by R. Spude.

HAER team at Mariscal, Big Bend National Park. Art Gómez stands at left.

J. Scott Altenbach

Abandoned Mines as Bat Habitat

Over the last decade, an increasing concern about liability by private and public land owners, as well as federal and state agencies, has prompted an exponential increase in the efforts to safeguard abandoned mines. Abandoned mines have long been recognized as habitat for a large number of bat species as well as other kinds of wildlife. Since safeguarding typically involves destruction by blasting or backfilling, this has stimulated growing interest in their potential for wildlife habitat. Although a systematic program of evaluation of abandoned mines prior to closure has been slow to implement, enough mines have been surveyed to illustrate that they are a significant habitat resource for bats of several species. Of the thousands of abandoned mines in the West which have been surveyed over the last ten years, roughly half have shown some type of use by bats and about 10% have shown some form of significant use. The difficult question of what constitutes significant use has been addressed by Altenbach and Milford (1995), Altenbach and Pierson (1995), Tuttle and Taylor (1994), and others. Use by maternity colonies of any kind, use for large hibernating colonies, use as a migratory stopover, and use for colonial reproductive behavior are relatively clear examples. Prudence dictates that any kind of use that is previously undocumented qualifies as well. Significance of use varies regionally and is generally best determined by the best judgment of bat biologists familiar with the region.

Townsend's big-eared bat, Corynorninus townsendii, *is the most common resident in abandoned mines in many regions of the west. It uses mines for maternity activity, bachelor colonies, mating, and hibernation.*

Large numbers of underground mines were not a common feature of the environment in the western United States until a few decades before the dawn of the 20th century. Why should any effort be made to protect a habitat, especially one that presents a potential hazard to humans, that did not exist until recent times? By the same reasoning, we should not need wildlife preserves or national parks. Many bat species are in decline as a direct or indirect result of human activity. A significant part of this decline can be attributed to destruction of natural roost sites or human disturbance at roost sites. Species such as Townsend's big-eared bat are notorious for establishing maternity colonies in relatively exposed parts of caves and rock shelters. Equally notorious is their habit of abandoning a roost site, and their newborn young as well, because of a relatively slight disturbance. Recreational activities, although perhaps inadvertent, have had a strong negative impact on a number of bat species. Roost habitat destruction because of encroaching development, logging of old growth forests, and renewed mining have also taken a toll. Oddly enough, the micro-habitat presented by concavities in "snag" trees is duplicated by the micro-habitat provided in some abandoned mines.

Twenty-eight of the 45 species of bats found in the continental United States are known to roost in underground mines. In California, the only known colonies of the Cave myotis, all of the winter and most of the summer roosts of the California leaf-nosed bat, and roughly one third of all Townsend's big eared bat roosts are in abandoned mines (Altenbach and Pierson 1995). All of the known maternity colonies of the endangered Lesser long-nosed bat in the United States are in abandoned mines (V. M. Dalton, pers. comm.), as are the majority of maternity and hibernating colonies of Townsend's big-eared bats in New Mexico. Abandoned mines provide a refugium in the face of loss of natural habitat. They can be likened to "Noah's Arks" which may allow some bat species to survive in the face of continuing disturbance at natural roost sites. Simultaneous safeguarding and protection of a small number of abandoned mines with bat-compatible closures or "bat gates" promises to buy some time and allow more informed decisions to be made about their long term survival. Hopefully, natural roost sites can be protected although it seems quite possible that protected abandoned mines could easily be the primary roost habitat for some of these species.

Nevada's mine closure program illustrates the potential for impact that abandoned mine clo-

sure can have on bat populations. Before state personnel were aware of the bat habitat potential of abandoned mines, the Nevada Abandoned Mine Lands Bureau closed or facilitated the closure of roughly 3,000 mine features without any type of wildlife survey. If we conservatively estimate that 5% of Nevada's abandoned mines had significant bat use, then roughly 150 mines with significant bat use, and probably in some cases with the bats in them, were destroyed by backfilling. Even though abandoned mines are a patchy feature of the environment, hundreds of thousands of them are scattered over the western states. When the impact of the Nevada mine closure program is extrapolated regionally, the potential for extreme negative impact to bat populations is easily seen.

Evaluation of the Resource

Bat surveys in anticipation of abandoned mine closures vary from thorough to non-existent. They depend upon whether the entities doing the closure are public or private, whether the personnel involved have even heard that mines are used by bats and that bats may be worthy creatures to protect, whether money is available to do surveys and construct bat-compatible closures, as well as the general vagaries of human nature. Although mine closure programs using federal monies are mandated by National Environmental Policy Act regulations to evaluate mine features for wildlife habitat, those using state or private dollars generally are not. For example, a state-based Abandoned Mine Lands Program funded by the mining industry is not subject to federal guidelines. At a 1994 public meeting, representatives from a mining company stated with some pride and enthusiasm that they would backfill every abandoned mine on their property without considering possible wildlife use and there was nothing anyone could do about it. In contrast, other mining companies have gone out of their way trying to do the right thing.

A program to evaluate abandoned mines for significant bat use first requires the education of the private and governmental entities involved with mine closure. The bat habitat-abandoned mine workshops organized by Bat Conservation International, in partnership with corporate, state and federal agencies, have informed numerous individuals and companies about the problem and some of the solutions to it. Some of the best success stories, i.e., mines with significant bat populations safeguarded with bat-compatible closures, have occurred because informed people were aware of the importance of the issue and took appropriate actions. Since there are not unlimited funds to protect abandoned mines as bat resources, protection first requires careful evaluation of the resource.

Although bat biologists continue to learn more about the diverse factors which make abandoned mines suitable for bat habitat, we have not yet reached a level of understanding that allows evaluation of specific bat use, or even the potential for use, without a careful examination of the actual mine in question.

Bat surveys of abandoned mines can be internal (underground), external, or a combination of both. External surveys are time consuming, labor intensive, require specialized equipment and training, and require considerable knowledge of abandoned mines and especially the bats that use them. Although this approach can detect warm season use, it is useless for detecting hibernation, especially if small numbers are bats are present. If a mine cannot be fully evaluated because portions of its workings are inaccessible or because entry presents unacceptable risks, an external evaluation is the only option. In practice, a combination of underground and external evaluation is generally necessary.

Internal surveys are the least labor intensive and most effective means to survey abandoned mines for bat use. However, this procedure requires personnel who are underground-trained and experienced, properly equipped, and experienced in bat biology. Unfortunately, there are many individuals attempting to do internal abandoned mine surveys, who fail to meet the qualifications for underground survey and who pose safety risks to themselves and others.

It is essential, therefore, to continue efforts to increase awareness about both the potential shortcomings of current mine evaluations and the actual complexity of historic mining operations. Training for external evaluation has been part of the ongoing bat habitat-abandoned mine workshops, but that training is very generalized. Underground training has been nonexistent, partially because of liability-related concerns on the part of those who would do the training. Although Mine Safety and Health Administration training and certification is a prerequisite for anyone doing underground surveys, it is primarily intended for individuals working in active mines. As such, the program does not include information concerning some of the most common hazards associated with inactive mines, e.g., the kinds of pertinent gas detection apparatus and their limitations, or how to recognize old explosives. Implementing comprehensive training programs would ensure competent researchers who were able to effectively evaluate bat use in abandoned mines. Correcting these education-related deficiencies would go a long way to ensuring that historic mines would be properly evaluated prior to proposed closure programs.

Bat-Compatible Closures

If survey data reveal that a mine is used by bats and if the use is significant, the mine would be an ideal candidate for protection with a bat-compatible closure that precludes public access, but allows bats to use the site. However, the decision to install a bat-compatible closure depends upon a variety of other factors. Appropriate questions to consider include: Are alternative features, used in the same way, nearby? How feasible is a bat-compatible closure for a particular mine entry? Will preservation of an abandoned roost provide habitat or mitigate habitat destruction elsewhere?

The bat-compatible closures used by the New Mexico Abandoned Mined Lands Program are designed by staff engineers and are similar to the designs preferred by the American Cave Conservation Association. Current designs, generally constructed with crossbars of heavy angle iron reinforced with stiffeners, are difficult for vandals to breach. Tuttle and Taylor (1994) and Dalton and Dalton (1995) summarize design details; the American Cave Conservation Association is a further source for gate designs. Of the many hundreds of bat-compatible gates installed in the United States, relatively few have been breached by vandals. In New Mexico, the percentage of breached gates is lower than the percentage of failures for non-bat-compatible closures. All types of mine closures must be monitored for possible failure. A mine cannot be closed and then forgotten.

A bat-compatible closure or "bat gate" at one of the adit entrances of an abandoned manganese mine in New Mexico. The gate blocks human entry but lets the three species of bats that use the mine come and go freely.

Timing of Mine Closure

The selection of an appropriate "time window" for permanent sealing or safely installing a non-bat-compatible closure must minimize the possibility that known or unknown resident bat species will be trapped inside. Installation of bat-compatible closures must likewise be timed to minimize disturbance of residents. Timing will vary with the type of use, the species present and the region. Closure activities need to be explicitly coordinated with local bat biologists.

Conclusion

We know that abandoned mines are important habitat, in some cases vital habitat, for a large number of bat species. We know how to survey mines for bat use and we have a good idea what constitutes significant use. We have considerable experience with designing bat-compatible closures, we know how bats deal with them, and we know their installation can result in increased bat use within protected mines. We know that bat-compatible closures can be defeated by vandals, but this becomes less likely as designs improve. We know that bat-compatible closures have to be monitored just like any other mine closure. If we can continue to learn and apply what we know, several bat species, currently in serious jeopardy, will have an improved chance of survival well into the next century.

References

Altenbach, J.S. and H. E. Milford, 1995 Evaluation and management of bats in abandoned Mines in New Mexico. In: D. Pate, ed. Proceedings of the 1993 Cave Management Symposium, Carlsbad, New Mexico, pp. 326-330.

Altenbach, J.S. and E.D. Pierson, 1995 The importance of mines to bats: an overview. In: Riddle, B.R., ed. Inactive mines as bat habitat: guidelines of research, survey, monitoring and mine management in Nevada. Biological Resources Research Center, University of Nevada, Reno.

Altenbach, J.S., 1995 Entering mines to survey bats effectively and safely. In: Riddle, B.R., ed. Inactive mines as bat habitat: guidelines of research, survey, monitoring and mine management in Nevada. Biological Resources Research Center, University of Nevada, Reno.

Dalton, V.M. and D.C. Dalton, 1995, Mine closure methods including a recommended gate design. In: Riddle, B.R., ed., Inactive mines as bat habitat: guidelines of research, survey, monitoring and mine management in Nevada. Biological Resources Research Center, University of Nevada, Reno.

Tuttle, M.D. and D.A.R. Taylor, 1994 Bats and Mines. Bat Conservation International, Austin, TX.

Scott Altenbach is a Professor of Biology at the University of New Mexico. Since 1991, he has undertaken bat surveys of abandoned mines for the New Mexico Abandoned Mined Lands Program as well as for public and private concerns, including the National Park Service, in other states. He worked briefly as a miner in his undergraduate days, has logged over 6,000 underground hours, and has examined over 1,800 abandoned mines.

Anyone wanting to learn more about the bat habitat-mines program should contact the Bats and Abandoned Mine Project, Bat Conservation International, P.O. Box 162603, Austin, Texas 78716, (telephone 512-327-9721).

Frances Joan Mathien

Tri-Cultural Use of the Cerrillos Mines

Examples of turquoise pendant and beads dating c.1020-1120 recovered during excavations at Pueblo Alto in Chaco Canyon

Located 15 to 20 miles southwest of Santa Fe, the low hills known as Los Cerrillos contain deposits of copper, silver, lead, zinc, iron, gold, and turquoise. Beginning with the prehistoric mining of turquoise, these mineral deposits have been important to Native American, Spanish, Mexican, and American miners who have left considerable evidence of their operations. These remains present a unique opportunity to study the mining record of these cultures. The area in which the mines are located, encompasses about 30 square miles. Both the size of the area and its mixed ownership (patented, public domain, state-owned) hinder preservation. The Cerrillos Mining District was placed on the New Mexico State Register of Cultural Properties in 1973, but it is not on the National Register of Historic Places.

Although the Spanish explorers noted the mines of the Native Americans in the Cerrillos Hills during the 1500s, it has only been during the past 30 years that detailed documentation of prehistoric, Spanish, and Mexican mining localities in the Cerrillos Hills has occurred. A. Helene Warren, a geologist whose interests were in archeologically-related studies, including early mining, focused on one half section of land in the southern Cerrillos hills as part of an environmental inventory and analysis for the Occidental Minerals Corporation, but she also explored other nearby mining sites as well (Warren 1974; Warren and Mathien 1985; Warren and Weber 1979). Under the direction of Daisy Levine, of the Museum of New Mexico, additional survey for the Mining and Minerals Division of the New Mexico Department of Energy and Minerals focused on one full section located immediately north of the half section surveyed by Warren (Levine and Goodman 1990) prior to back-filling dangerous mine shafts. Homer Milford of the New Mexico Abandoned Mine Land Bureau examined two areas at the northern end of the district: Turquoise Hill (Swick 1995) and the Real de los Cerrillos (Milford and Swick 1995). The work of these and other scholars provides the basis for the following discussion.

Native American Mining

Native American mining in the Cerrillos Hills included extraction of both turquoise and galena, a lead glance that contains silver and other minerals. Blue-green stones, especially turquoise, have been important to southwestern inhabitants for over a millennium. The Spanish observed Native American use of turquoise as soon as they visited tribes in New Mexico (Schroeder 1979), and there is an increase in the number of turquoise artifacts recovered from prehistoric sites dating around 900 (Mathien 1981; Snow 1973). Spanish and Mexican records of the prehistoric use of turquoise mines are vague, but sources of turquoise discovered since the mid-1800s all indicate earlier mining (Jones 1909; Pogue 1915). It is one of the Cerrillos mines, Mount Chalchihuitl, that provides evidence for the greatest mining activity. W. P. Blake (1858), the first geologist to visit the area in the American period, heard about the mines from Navajo and Pueblo Indians who wore turquoise stones as ornaments and prized them for trade.

Recent surveys (Levine and Goodman 1990; Milford and Swick 1995; Swick 1995; Warren 1974; Warren and Mathien 1985) indicate that the Native Americans utilized several areas in the Cerrillos Hills. In the north, at the Castillian and Tiffany pits on Turquoise Hill sherd collections indicate prehistoric use by the 10th century. Based on the number of sherds, however, the greatest mining activities probably took place during the years between 1375 to 1500. In the southern part, in addition to Mount Chalchihuitl, there are three major turquoise mining areas: the ridge west of Mina del Tiro, the O'Neil Blue Bell turquoise mines, and the Bonito quarries on the hills south of Franklin Ridge. In addition, there are two small pits on the east side of Franklin Ridge and the Firefly quarries that may have been the location of the earliest mine. One pit is adjacent to a small turquoise workshop that had several sherds that date approximately from 875 to 1050. Similar sherds were found at workshops west of Mina del Tiro and on the north end of Franklin Ridge. Other prehistoric mining occurred in the foothills of Mount McKensie and Grand Central Mountain (Warren and Mathien 1985).

Warren's analysis of potsherds from the Cerrillos mines indicates two major periods of prehistoric utilization—1000-1150 or 1200 when

Chaco Canyon (about 100 airline miles to the west) was the major center of cultural development which utilized great quantities of turquoise, and from 1350 to 1680 when there was a major expansion of pueblo culture in the area along the Rio Grande. During the earlier period, sherds from the mines came mainly from the eastern Red Mesa Valley (where numerous Chaco related sites have been documented), as well as some from the Upper Rio Grande Valley. Sherds from the later period suggested strong ties to San Marcos Pueblo, located about two miles east of the mines. Weaker ties to Tonque Pueblo to the south and the Pajarito Plateau to the west were also suggested (Warren and Mathien 1985).

Mining tools recovered from these prehistoric sites include grooved axes, mauls, picks, hand-held hammers, anvils, and lapidary stones. The tools are usually made from local material such as, igneous rocks, plus hornfels, quartzite, sandstone or vein quartz. The lapidary stones are usually found in workshop areas where the host rock was removed from the turquoise prior to modification into beads and pendants.

That non-local people mined the Cerrillos Hills during the early period is suggested by the evidence from five small pueblos and a sherd and lithic scatter known as the Bronze Trail Group located approximately one kilometer east of the southern turquoise mines (Wiseman and Darling 1986). Although a few sherds suggested brief occupation of two of the sites prior to 900, the majority of the sherds were attributed to 900-1200, with only a few indicating post 1300 use of these sites. Wiseman and Darling (1986) suggest these sites were used by miners solely for the purpose of turquoise extraction. Architectural differences between these sites and contemporary local Rio Grande pueblos, the absence of tools related to subsistence activities (e.g., manos, metates, and projectile points), the location of the Bronze Trail sites on non-arable land, and the dominance of turquoise debris, lapstones, and mining tools at these sites indicates the presence of people who used the sites for turquoise procurement. The majority of the sherds indicated ties to the Mount Taylor area just east of the Red Mesa Valley.

After 1300, but prior to the arrival of the Spanish, the nearest Native Americans lived at San Marcos Pueblo (1300-1700). After 1700, sporadic visits to the turquoise mines by small groups of Native Americans probably took place. During the American period, there are records of groups of three or four visiting Mount Chalchihuitl and Turquoise Hill (Schroeder 1979). Indians from Santo Domingo Pueblo claimed ownership of the Cerrillos turquoise mines (Schroeder 1976), but Snow (1973) indicates that members of Santa Ana, Cochiti, San Felipe, and San Ildefonso are among the puebloans who indicate use of these mines in the historic period.

Prehistoric lead mines were investigated by the Spanish as soon as they explored the area in the 1500s, and confirming evidence of their use by Native Americans was collected during surveys and excavations. Warren (1974) documented 12 galena mines; the ore was used for prehistoric glaze paint on Rio Grande pottery from 1300 to 1700. Lead glazed ceramics were also recovered from the Ruelena (Pennsylvania) Mine (Milford and Swick 1995). Two excavations have been carried out. At Mina del Tiro, galena was extracted for 1,800 feet along the vein outcrop and to unknown depths; at the Bethsheba mine excavations by the Albuquerque Archaeological Society were carried out to 23 feet (Richard Bice, personal communication 1998; Sundt 1993). Tools and sherds dating from 1300 to 1700 recovered from the lead mines were similar to those found at the turquoise mines. Spanish documents indicate the inhabitants of San Marcos Pueblo and other small sites along San Marcos Arroyo utilized these mines. The few sherds dating after 1700 and the lack of glaze paint on pottery after this date are in agreement with the Spanish records that the Native Americans did not work the mines after the Pueblo Revolt of 1680.

Spanish and Mexican Mining

In 1581, members of the Rodriguez-Chamuscado Expedition were led to galena and copper deposits by inhabitants of San Marcos Pueblo. When samples were taken, silver was among the minerals present (Milford and Swick 1995). Extensive mineral exploration began with colonization in 1598; silver ore was extracted within the first few weeks. During the first few years, both smelting and the use of quicksilver techniques were employed by Juan de Oñate and Vincente de Zaldivar. The few government documents that survived the period 1610 to 1690 indicate that the small Spanish population was aware of silver deposits in the area, but references to mining are silent. In the 1630s, however, one of the 50 male residents of Santa Fe was listed as a silversmith. Some of the pottery at the galena mines dates to this period. Milford and Swick (1995) suggest that the lack of a written record may be due, in part, to a desire to avoid taxes and retain subsidization of the colony's missionary efforts by the crown.

In the mid-1600s, a ranch was established south of the Santa Fe River near Alamo Creek and the nearby hills were given the name Los Cerrillos. Because all local records were destroyed in the Pueblo Revolt of 1680, there is no documentation of mining activity until after that date. The earliest surviving record of a mining camp being founded

and recognized as an official community dates to 1695 when Governor De Vargas appointed a mayor for El Real de los Cerrillos. This enterprise included three lead-silver mines that were "reopened" and may represent the mines that Vincente Zalvidar established earlier (the Santa Rosa and the Mina del Tiro were both known since 1581). This is the oldest Western mining camp in the United States for which we have a clear record. The camp was closed in 1696 at the start of another revolt, and the camp was never reoccupied. In 1697, Governor Rodriguez Cubrero confiscated De Vargas' property; he then owned the Santa Rosa silver mines until 1703 when De Vargas returned as governor. Both men died in 1704; in 1709, Juan de Ulibarri received title to the Santa Rosa mine. There are few references to the mine after 1709 (Milford and Swick 1995) .

Around 1763-1764, Tomas Antonio de Sena, Bartholome Fernandez, and Manuel Duran y Chavez requested title to Nuestra Señora de los Dolores Mine Grant (Our Lady of Sorrows). Milford (Swick 1995) reviewed evidence for this and two other mining claims from 1764 and concluded that these should be identified as the Castillian Mine or the Old Indian Prospect on Turquoise Hill (Milford 1995). No other records exist for the mines on Turquoise Hill until the American period. A few records acknowledge the presence of silver in the area, but note that little mining took place, probably because smelting was not profitable. Because a few threads of gold have been found in the turquoise, Milford (1995) speculates the Spanish may have been looking for gold, a quest that was not rewarded then or during the later American period explorations.

After Mexican independence (1821), Milford (Milford and Swick 1995) indicates that there were 50 known lead veins in Los Cerrillos, several of which were known to be old mines. In 1830, Alvarado reopened the Santa Rosa Mine and a group of other men formed a mining company to operate three mines, one of them being the Mina del Tiro where Milford suggests they cleaned out an earlier Spanish shaft. Milford reports that one of the logs from the Bethesda mine provided a tree-ring sample that dated to 1832.

Documented evidence for turquoise mining during the Spanish and Mexican periods is limited and much of what follows is inferential. That the Nahuatl word, Chalchihuitl, was used to denote turquoise and that this name was given to the largest prehistoric turquoise mine suggests that the Nahuatl-speaking Tlascalans who accompanied Oñate may have been involved in mining. Turquoise would have been an important gemstone for the Tlascalans, and it would have been accepted in trade by local pueblo people. Because the Spanish did not value turquoise, it was seldom mentioned in their documents. That the name "Old Indian Prospect" was still used for an area on Turquoise Hill in the 19th century, and because the deposits at Mount Chalchihuitl proved to be much depleted during the American period while those on Turquoise Hill were productive during the 1880s, may indicate continued use of the northern turquoise mines during the Spanish period (Swick 1995).

American Mining (post 1846)

During the 1850s and 1860s, the Delgado family claimed the Cerrillos area as part of a land grant (Milford and Swick 1995). In 1861, the Mina del Tiro was leased from the Delgados and an earlier mine shaft was reopened. When the mine collapsed, the miners refused to return to work. The government rejected the Delgados claim and opened the area to purchase in 1870. By 1872, Santa Fe entrepreneurs had purchased the lands containing most of the old silver mines from the government and the Santa Rosa and Ruelena were reopened. In 1878, the owners of some of the

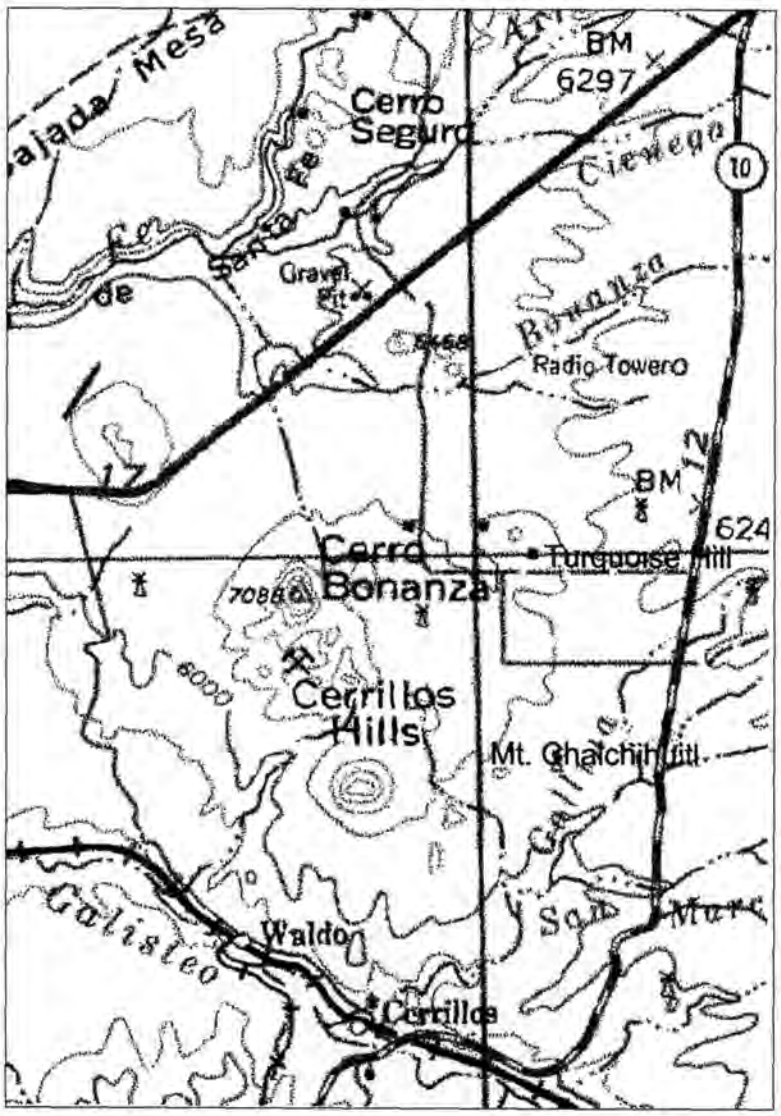

Map of Cerrillos area indicating several of the mines and other localities.

mines hired Robert Hart from Leadville, Colorado, to supervise the development of their mines. Hart prospected on the areas still owned by the government and found some good silver veins. He returned to Leadville to recruit other miners. In 1879, with the influx of Colorado miners and much news coverage, the boom that was to make the Cerrillos Mining District famous began.

When the Cerrillos mines were the only known source of turquoise in the late-19th century, mining claims on Turquoise Hill were profitable investments. The American Turquoise Company and its mine manager, J. P. McNulty, developed their turquoise claims until circa 1914, but the discovery by Americans of other turquoise deposits in the Southwest brought a decline in price and eventual decreased production.

Recently, drilling for copper ores by Occidental Minerals was strongly opposed by local inhabitants and mining operations soon ceased (Bice, personal communication 1998). Today, several areas are being mined for gravel, but the minerals do not bring in sufficient funds to induce major extractive operations. Although there is a long history of mining in the Cerrillos Hills and a few individual owners who are attempting to preserve the evidence of earlier operations, e.g., the Millennium Complex consisting of the Tiffany and Castillian mines on Turquoise Hill, there is unfortunately no overall plan to preserve this important multicultural mining history or to evaluate its potential eligibility for the National Register of Historic Places.

References

Blake, W. P. 1858. The Chalchihuitl of the Ancient Mexicans: Its Locality and Association, and Its Identity with Turquois. *American Journal of Science, Second Series*, 25(74): 227-232.

Jones, F. A. 1909. Notes on Turquoise in the Southwest: Concerning Its Original Workings, Its Geology, and Its Modern Method of Mining. *South-Western Mines* 1(12):1-2.

Levine, Daisy F., and Linda J. Goodman. 1990. An Archaeological and Ethnographic Survey within the Cerrillos Mining District, Santa Fe County, New Mexico, Volume 1. *Archaeology Notes* 508. Museum of New Mexico, Office of Archaeological Studies, Santa Fe.

Mathien, Frances Joan. 1981. *Economic Exchange Systems in the San Juan Basin*. Unpublished Ph.D. dissertation, Department of Anthropology, University of New Mexico, Albuquerque.

Milford, Homer E. 1995. Brief History of Turquoise Mining and Turquoise Hill. *New Mexico Geological Society Guidebook, 46th Field Conference, Geology of the Santa Fe Region*, pp. 175-177.

Milford, Homer E., and Mike E. Swick. 1995. *Cultural Resource Survey for Real de los Cerrillos Project, Santa Fe County, New Mexico. Volume I. Historic Survey of the Los Cerrillos Area and Its Mining History*. New Mexico Abandoned Mine Land Bureau, Report No. 1994-2. Mining and Minerals Division, Energy, Minerals and Natural Resources Department, Santa Fe.

Pogue, J. E. 1915. *The Turquois*. Memoirs of the National Academy of Science 12(2), 3rd memoir.

Schroeder, Albert H. 1976. A History of the Area along the Eastern Line of the Santo Domingo Pueblo Aboriginal Title Area. In: *The Basis for Santa Domingo Pueblo's Claim to the Turquoise Mine Area*. Florence Hawley Ellis and Albert Henry Schroeder. Prepared for the U. S. Justice Department.

_____1979. The Cerrillos Mining District. *Archaeology and History of Santa Fe County*. Special Publication No. 8: 131-6. New Mexico Geological Society.

Snow, David H. 1973. Prehistoric Southwestern Turquoise Industry. *El Palacio* 79(1):33-51.

Sundt, William M. 1973. Progress Report on AS-5. The Excavation of a Primitive Indian Lead Mine. *AWANYU* 1(4):22-26.

Swick, Mike E. 1995. *Cultural Resource Survey of Turquoise Hill, Santa Fe County, New Mexico*. New Mexico Abandoned Mine Land Bureau Report No. 1994-1. Santa Fe.

Warren, A. H. 1974. An Archaeological Survey of the Occidental Minerals Corporation Proposed Mining Project Area in the Cerrillos District, Santa Fe County, New Mexico. ROMCOE Environmental Study, OXYMIN Cerrillos Project, Report 7 of Final Report of 1976. Denver.

Warren, A. Helene, and Frances Joan Mathien. 1985. Prehistoric and Historic Mining in the Cerrillos District: Time and Place. In: *Southwestern Culture History. Papers in Honor of Albert H. Schroeder*, Charles A. Lange, ed,. pp. 93-128. Papers of the Archaeological Society of New Mexico: 10. Albuquerque.

Warren, A. Helene, and Robert H. Weber. 1979. Indian and Spanish Mining in the Galisteo and Hagan Basins. *New Mexico Geological Society Special Publication* 8:7-11.

Wiseman, Regge N., and J. Andrew Darling. 1986. The Bronze Trail Site Group: More Evidence for a Cerrillos-Chaco Turquoise Connection. In: *Collected Papers in Honor of James G. Bain*, Anne V. Poore, ed., pp. 115-143. Papers of the Archaeological Society of New Mexico: 12. Ancient City Press, Santa Fe.

Frances Joan Mathien is an archeologist in the Santa Fe Support Office of the Intermountain Region of the National Park Service. Her research has focused on the prehistoric inhabitants of Chaco Canyon, New Mexico, especially their use of turquoise. Because sources of this semi-precious stone are numerous and are located at some distance from Chaco Canyon, studies designed to locate the sources used have been part of her ongoing research for several years.

Donald L. Hardesty

Treasure Hill and the Archeology of Shermantown

The discovery of the famous Comstock Lode in 1859 brought mining with a boom to what was then Utah Territory. Soon afterward, prospectors searched for precious metals further east into the Great Basin. In the fall of 1865, a group of prospectors found silver in the White Pine Mountains of eastern Nevada and promptly organized the White Pine mining district (Elliott 1938; Jackson 1963). Two years later, in the summer of 1867, Napias Jim, a local Indian man, showed miners a rich silver ore ledge near the summit of Treasure Hill near the eastern edge of the district. Word spread quickly about the new strike. "Going to White Pine" became the rallying cry of miners throughout the American West the following year. New towns and outlying camps grew up almost overnight on Treasure Hill. Of these, Hamilton, Treasure City, and Shermantown soon boasted populations of several thousand people, many of whom came in 1869 by stage from Elko, the nearby railhead of the newly completed transcontinental railroad. However, the Treasure Hill mines proved to be elusive and the "White Pine Excitement" died within a couple of years. Miners rapidly abandoned the settlements on Treasure Hill. Shermantown became a virtual ghost town in the early 1870s, Treasure City in the late 1870s, and Hamilton in the late 1880s. Still, British investors continued to pump capital into the mines until 1893, when the last British mining company left the district.

Shermantown Archeology

Shermantown is a microcosm of the "White Pine Excitement" on Treasure Hill. The town began as a land development around a spring in a canyon two miles below the mines at the top of Treasure Hill. First named Silver Springs, later changed to Shermantown after its principal developer Edwin A. Sherman, the well-watered town soon attracted several mills and smelters. The 1870 federal population census records 961 people in the town, but it probably reached a peak size of three or four thousand the year before. No photographs or sketches of Shermantown are known. Contemporary newspaper accounts, diaries, and mining assessments provide some descriptions of the town. Within a couple of years, the Treasure Hill boom burst, Shermantown's mills and smelters either closed or moved to the nearby town of Eberhardt, and the people left. Only 26 individuals remained in 1880.

Today, Shermantown exists only as an archeological site with a few ruins of buildings and structures still standing. The short life span and well-preserved archeological remains of the townsite make it ideally suited to interpret to visitors and to provide archeological information about the mining community at Treasure Hill. Visitors can easily observe the general layout and special use areas of the town. Even though extensively vandalized over the years, the downtown commercial area retains the most visibility. In addition to the more spectacular architectural remains of the downtown are the well-preserved foundations of several outlying residential buildings that reflect differences in the wealth, prestige, and power of people living in Shermantown. Furthermore, clusters of house foundations around the ruins of mills and smelters illustrate and interpret the importance of work-related settlement patterns in the town. Foundations and other archeological remains of working class houses upon prepared terraces in the less expensive land along the hillsides of the canyon further clarify the community's residential settlement patterns. Both house terraces and steep slopes provide visible symbols of the Shermantown working class even in the absence of standing buildings.

The value of the townsite as a repository of archeological information depends upon the research questions that are asked. Indeed, what questions are important? The comparative study of frontier mining towns is an obvious research strategy, but the scale of comparison must be considered in determining how the questions should be asked. Deetz (1991) makes the point that there should be a good match between the research question and the potential of the archeological site to answer the question. Specific research questions about local or family history, for example, demand detailed information about the provenance of archeological remains. Such information often is missing from sites in which house remains and associated features have been heavily disturbed or otherwise have poor integrity. In these cases, asking research questions about the community on a much broader and comparative regional, national,

or global scale gives a new importance to these sites as a repository of archeological information.

Shermantown is a classic example. The archeological study of the townsite began in 1989 with a cooperative agreement between the University of Nevada, Reno, and the Humboldt National Forest. Summer field school students mapped and excavated the townsite for three years. They discovered that some of the house remains at the townsite are relatively well-preserved, but many are not, making it impossible to learn much from the archeological record about individuals, families, or other specific household groups living in the town. On the other hand, exploring research questions about the townsite as a whole makes the site much more important. Therefore, the project's research strategy focused upon gathering archeological data to answer questions about mining town development, smelting technology, people without history, and the impact of globalization upon everyday lives.

Mining Town Development

The Shermantown research strategy asks questions about the historical development of mining towns in the American West. Mining camps typically grew up overnight in an explosive and haphazard fashion. Land speculators often played a key role in their genesis, imposing a preconceived plan or layout such as the checkerboard grid system that many camps held in common (Reps 1975). In many cases, the development of the town initially followed the plan, but later changed in ways determined by such things as landforms, the rise of industrial places such as mills around which workers housing clustered, or new transportation corridors. Variability and change in the historical trajectories of planned mining towns in the American West can be documented by combining archeological and documentary research.

The Shermantown project is one example. In 1868 Major Edwin A. Sherman, a Mexican War veteran from the nearby mining town of Austin, together with a small group of other investors, acquired land on Treasure Hill with favorable water and climate for the purpose of developing a town (Brooks 1995). They platted the townsite with a checkerboard grid (Cadwallader 1869) and sold lots at high prices. However, mapping of the archeological remains of the Shermantown townsite revealed that the town developed into something quite different. The town center more or less conforms to the grid plan, but the surrounding residential and industrial areas do not. During its short history, Shermantown appears to have evolved into a geographical pattern organized around several settlement clusters or nodes. One node is the commercial center of the town. Two other nodes are smelters surrounded by worker's housing. Yet another node is a sawmill in a side canyon also surrounded by worker's housing. Landforms and transportation routes also clearly played an important role in structuring the growth of the town. The town also expanded along the major road up Shermantown canyon toward the Treasure Hill mines and into a side canyon along a road that led to the sawmill node.

Industrial Archeology

The archeology of smelting technology offers another research direction. Water at Shermantown made it a natural place for processing the ore coming from the Treasure Hill mines. The June 8, 1869, *White Pine Evening Telegram* reported that 4 mills with a total of 31 stamps operated 24 hours a day in and around the town and that another mill with 15 stamps was under construction one-half mile to the south. Treasure Hill ore, after the initial recovery of a small amount of almost pure silver, required smelting technology to separate the silver from a lead-based compound (Jackson 1963). Mining companies built several smelters at Shermantown for this purpose. However, the Treasure Hill miners knew little about smelting technology, bringing about a period of intense experimentation. For example, in the June 11, 1870, issue of *The Mining and Scientific Press*, Joseph Mosheimer reported that the miners built "at least 40 smelters" in the White Pine district

Remains of Adobe Smelter at Shermantown.

during the last 12 months. The experimental Treasure Hill smelters ultimately provided the technological know-how to establish the smelting industry in the nearby town of Eureka, a world-class silver producer in the later 1870s and 1880s.

Archeology offers one pathway to learning more about the details of the smelting experiments on Treasure Hill. University of Nevada, Reno, students mapped the remains of two smelting works. One consists mostly of a standing adobe smoke stack and a scattered slag dump. The other at the north end of Shermantown includes a large slag dump, an oval-shaped basin situated above the slag dump and next to the remains of a furnace, the furnace itself, areas of blackened and reddened soil discoloration, and various other features found on four terraces cut into the hillside. Both places potentially contain archeological information about the architecture and metallurgy of Treasure Hill smelting. Gathering architectural information about the smelters requires excavation. The archeological study of metallurgy at the two smelters requires archaeometry and materials analysis of the slags. Both methods are planned for the immediate future.

The Shermantown Forgotten

In his archeological study of the early industrial town of Harpers Ferry, West Virginia, Paul Shackel (1996: 18) makes the point that "it is the laborers, craftsmen, women, and minorities who are often mute in our interpretations of the past." Archeology gives a voice to these forgotten people. At Shermantown, it offers glimpses of the everyday lives of these more or less invisible groups on the early industrial mining frontier of the American West. Who were they? The 1870 federal population census portrays the Shermantown dwellers to be mostly working class Euro-Americans born in the United States, but with significant ethnic enclaves made up of immigrants from Ireland, England, and Wales. Some came from China, Mexico, Germany, Scandinavia, France, and Yugoslavia. One African-American family lived there, and a few Native Americans lived just outside the town.

Household archeology gives the loudest voices to the Shermantown forgotten. Households reflect both history and adaptation to local environmental conditions (Wilk 1991). House sites are the cumulative material expression of the history and adaptation of households. When field school students excavated several house sites at Shermantown, they found that the archeological remains showed significant differences in architecture and artifacts attributable to class, ethnicity, and gender. What appear to be the remains of affluent "middle class" households, for example, include well-made white tuff stone houses and expensive personal belongings and furnishings. Recovered artifacts include crystal glass stemware, porcelain and decorated tableware, teaware, brass calendars, carpet fragments, drapery hardware, and other markers of wealth and prestige.

The best archeological evidence of ethnicity appears to be several Chinese households clustered together on one terrace. Newspapers occasionally mention the Shermantown Chinese but mostly to poke fun at their customs (e.g., *White Pine Evening Telegram*, July 1, 1869). The material remains of the Chinese households include ethnic markers such as rice bowls (Four Season and bamboo wares), soy sauce pots, brownware food jars, tea cups (celadon ware), "tiger whiskey" liquor bottles, and Chinese coins, along with canned and bottled food and beverages of western origin.

More women lived in Shermantown than in any of the other Treasure Hill towns, but they comprised only about 18% of the population in 1870. Most kept house; however, some worked as dressmakers, laundresses, owners or managers of businesses (e.g., theater, ice cream parlor, millinery store), school teachers, and nurses. The best archeological visibility of women comes from what appear to be the material remains of affluent households. Some of the white tuff houses at the north end of town include corset stays, buttons from women's and children's clothing, hairpins, glass beads, jewelry, hair combs, perfume and other women's toiletry bottles, and toy doll fragments.

Globalization

Finally, the archeological record of Shermantown documents an early period in the economic and political globalization of the American West. William Robbins (1994: 147) observes that "the late nineteenth century was a remarkably tumultuous period in the development and expansion of worldwide capitalism" that transformed the American West "from a region dominated by preindustrial societies to a fully integrated segment of the modern world capitalist system." For example, most commodities harvested in the region were shipped out of the region with prices set in the global marketplace (Robbins 1994). In the years following the Civil War, the accoutrements of industrialism appeared everywhere, including industrial technology, the labor question, ethnic enclaves, and corporations (Robbins 1994). Industrial mining first emerged on the Comstock. The building of transcontinental railroads quickly developed the industrial infrastructure of the American West and attracted global capital investment. British investment played a key role in developing the mining industry (e.g., Jackson 1963). By the turn of the century, large scale corporations and monopoly capital con-

Partially excavated stone dwelling of one of Shermantown's affluent households.

trolled most industries in the American West and strongly integrated the region into global markets and the modern world system.

The Treasure Hill mining boom occurred at the beginning of the economic and political transformation of the region. Shermantown provides a good archeological glimpse of what was happening. Consumer behavior is the key. In his archeological study of the Spanish presidios of Tucson, Williams (1991) used Wallerstein's (1974) concept of "essential goods" to make archeological data workable for the study of peripheralization. Essential goods are the things used in everyday life such as tableware, food, and clothing. Wallerstein (1974) argued that the relative percentage of essential goods used in everyday life reflects the process of peripheralization. Fully integrated peripheries should have high percentages of essential goods coming from core regions. The archeological record of consumption at either the household or the townsite level provides the information needed to estimate the percentages of essential goods coming from core regions. Shermantown archeology clearly shows that essential goods consumed at the townsite mostly originated in the core regions of America and Europe. Canned or bottled food and beverages came from such places as San Francisco, Chicago, New York, Boston, Baltimore, Norway, China, France, Portugal, and the Nassau district of Germany. Ceramic tableware mostly came from the Staffordshire potteries of England. Very few essential goods appear to be locally manufactured. The peripheralization of Treasure Hill came on the heels of the completion of the transcontinental railroad in 1869, making it possible to transport commodities cheaply to Treasure Hill. Comparative studies of other townsites in the American West are needed to more fully document this transformation process.

Notes

Brooks, Allyson. 1995. *Anticipating Mobility: How Cognitive Processes Influenced the Historic Mining Landscape in White Pine, Nevada, and the Black Hills of South Dakota*. Ph.D. Dissertation, University of Nevada, Reno.

Cadwallader, General Allen (compiler). 1869. *Map and Guide to the White Pine Mines and the Region of Country Adjacent to Eastern Nevada*. H.H. Bancroft and Company, San Francisco.

Deetz, James. 1991. Introduction: Archaeological Evidence of Sixteenth- and Seventeenth-Century Encounters. In: *Historical Archaeology in Global Perspective*, edited by Lisa Falk, pp. 1-9. Smithsonian Institution Press, Washington, DC.

Elliott, Russell R. 1938. *The Early History of White Pine County, Nevada*. Unpublished M.A. Thesis, University of Washington, Seattle.

Jackson, W. Turrentine. 1963. *Treasure Hill: Portrait of a Silver Mining Camp*, The University of Arizona Press, Tucson.

Mosheimer, Joseph. 1870. *Ore Smelting at White Pine District, Nevada*. The Mining and Scientific Press (June 11, 1870), pages 40 ff.

Raymond, Rossiter W. 1869. *Mineral Resources of the States and Territories West of the Rocky Mountains*. Government Printing Office, Washington, DC.

Reps, John W. 1975. Bonanza Towns: Urban Planning on the Western Mining Frontier. In: *Pattern and Process: Research in Historical Geography*, edited by Ralph E. Ehrenberg, pp. 271-289. Howard University Press, Washington, DC.

Robbins, William G. 1994. *Colony and Empire, The Capitalist Transformation of the American West*, University Press of Kansas, Lawrence.

Shackel, Paul A. 1996. *Culture Change and the New Technology: An Archaeology of the Early American Industrial Era*. Plenum Press, New York.

Wallerstein, Immanuel. 1974. *The Modern World-System*. Academic Press, San Diego, California.

Williams, Jack. 1992. The Archaeology of Underdevelopment and the Military Frontier of New Spain. *Historical Archaeology* 26 (1): 7-21.

Wilk, Richard R. 1991. *Household Ecology: Economic Change and Domestic Life Among the Kekchi Maya in Belize*. The University of Arizona Press, Tucson.

Donald L. Hardesty is Professor of Anthropology at the University of Nevada, Reno. His mailing address is: Donald L. Hardesty, Department of Anthropology/096, University of Nevada, Reno, Nevada 89557-0006. Telephone: 702-784-06049. Fax: 702-784-1988. Email: hardesty@scs.unr.edu

Barbara Mackey

The Kelly Mine
Archeological Monitoring and Hollywood Magic

Along a lonely stretch of highway in southeastern California, a massive metal headframe and huge tailing piles loom out of the desert landscape. The mining and milling remains of the California Silver Rand Company's Kelly Mine tell the story of the boom and bust of one of the richest, most concentrated silver deposits in the Randsburg District of San Bernardino County, California.

On April 12, 1919, Hamp Williams and John Nosser discovered silver in a rock outcropping 1.5 miles southeast of Randsburg. The discovery launched the extraction of an unusually high-grade ore concentration by the California Rand Silver Company, formed by John Kelly, a Bakersfield sheriff. The silver ore was so rich that the Kelly Mine was known as "the mine with no dump." The operation grew to include two main shafts. The No. 1 shaft bottomed out at 660 feet and the No. 2 shaft was cut to serve as the main exit for ore and a direct feed into the primary crusher of the mill. A massive, 200-foot high gallows head frame and hoist were purchased from the dismantlers of the Goldfield Consolidated Mining Company in Goldfield, Nevada. A 100-ton capacity oil-flotation process mill was constructed in December 1921 and quickly expanded to a 400-ton operation. The mine boasted a steady return, employed 300 people, and developed a modest industrial complex of ancillary buildings and company housing. By 1926, the blocked out ores had lower values and the price of silver continued to drop. In 1929, the California Rand Silver Mine dissolved the company and the property was subsequently picked up on options or leases. Lessees continued to operated the mine and mill; in 1933, a lessee erected a 200-ton cyanide unit to process the lower grade ores. The plant closed in 1942 under order of the War Production Board. The mine remained dormant until an investor trucked in equipment and machinery from other mining complexes to promote speculative development plans in the 1960s. The plans never materialized; gradually, the mining and milling structures have collapsed or have been salvaged by local residents.

Nothing at the site today reveals its transformation in 1996 into the bustle of a Hollywood-constructed movie set. The three-month invasion of a cast and crew in excess of 200 people sparked another short boom for the area and an unusual historic preservation scenario.

The tailings and waste piles from the Kelly Mine offered the solution to a filming production problem. The movie storyline required a junk yard with towering piles of trash. The film's location scout was unable to find a suitable junk yard, whose owners were willing to suspend operations long enough to allow months of set construction and filming. The director and producers were steadfast in wanting to create the set designer's conceptualization of the script; they refused to use computer enhancements. During the location search, the set designer drove past the old mine and visualized the "mounds" (waste dumps) covered with junk and a town built among the weathered, partially dismantled mill buildings.

Since the Kelly Mine was located on public lands, the proposed site transformation required a special use permit from the Bureau of Land Management, Ridgecrest District. Mineral claims for the mine were owned by a private out-of-state company, which employed an on-site caretaker. The caretaker had been living at the mine for almost 30 years. Some of the Kelly Mine's company housing, located about one-quarter mile north of the waste dumps and outside of the proposed filming area, were also occupied. The juxtaposition of historic remains, local residents, and BLM regulations suggested a potential for conflicts

Blacksmith-machine shop and wooden trestle ruins associated with the Kelly Mine and a local resident's mobile home.

Hollywood transformation of the blacksmith-machine shop and wooden trestle ruins associated with the Kelly Mine and a local resident's mobile home.

as well as an unique cultural resources management situation.

The Film Project

Negotiations between the film producers and BLM began with defining the area of potential effect. The director, production designer, and director of photography (with an entourage of assistants) represented the film company. Since the Kelly Mine area had never been surveyed, the film production company contracted with Archaeological Research Services, Inc. (ARS), Virginia City, Nevada, to conduct an inventory of a 20 acre parcel encompassing the mining and milling complex constructed during the 1920s. The complex included standing structures (the original mill, power station, timber framing house, machine and blacksmith shop, miners' changing house, assay office, mine office, hoist house, and company employee housing); collapsed structures; various mining and milling features (tanks, collapsed ore bin, settling pond, industrial scatters, tank platforms, head frames, ore chute, equipment, tailings and waste piles, shafts, adits, and prospect pits); linear features (fence line, power line, and historic road); and modern features (occupied mobile homes, recent industrial scatter, junked cars and trucks, and domestic trash). Based upon ARS' research, the site was recommended as being eligible for the National Register of Historic Places.

ARS developed a management plan to protect and preserve the surviving physical and archeological remnants of the historic mine complex. With the proposed movie set construction and filming activities woven so intimately among all the historic properties, ARS and BLM required a full time monitor be either "on call" or actually present at the site during all phases of production: construction, filming, and "wrap" (clean-up). BLM also attached pertinent mitigative measures and stipulations to its permit concerning threatened wildlife and endangered species, specifically the desert tortoise. BLM realty specialists, wildlife biologists, environmental coordinators, and rangers would visit the site, preside at orientation meetings, and be on hand to clarify monitoring issues. Since each phase of film production entailed different movie personnel, orientation meetings for the various crews were scheduled prior to each phase. Orientation by resource monitors included a history of the site and the rationale for protecting it, monitoring methods, violation consequences, and question and answer sessions. The monitors preapproved all set placements, vehicle and equipment locations, and activity areas. Consequences of violations included shutting down film production, fines, and employee dismissal.

The Construction Phase

Prior to movie set construction, the ARS archeologist-monitor flagged off historic features with Caution or Do Not Enter tape both to protect the cultural resources from pedestrian and vehicular traffic and for crew safety. Many of the historic standing structures were unstable. Flagging was removed if it might be visible in any scene and was replaced after filming. Whenever necessary, the monitor removed isolated historic debris from the immediate area, marked its provenience, and returned it after the "wrap" phase.

The construction crew included personnel from three departments: Construction, Art, and Set Dressing. The Construction Department fabricated 13 structures to create the fictitious community in which the movie takes place. The crew used new and recycled lumber, corrugated tin roofing, tar paper, cardboard, canvas tenting, linoleum, entire old shacks (trucked in), vehicles, and trailers to fabricate the town. All imported materials were purchased locally and looked the same as, or were made to resemble, historic structures and debris at the site. Interestingly, some materials may have originally been scavenged, dismantled, and removed from the site in earlier times. Mobile homes occupied or owned by current site residents were cosmetically sheathed to match the fabricated movie structures. With the exception of several temporarily installed power poles, ground disturbance was limited to previously altered areas.

The Art Department supervised and managed the set through all filming phases. The production designer viewed the site as a blank canvas, which he continually manipulated in order to achieve his design concept. As an artist, he had difficulty attaining 100% of his creative goal within the parameters of cultural resource protection. Since he envisioned the tailings covered with junk, a fundamental challenge was to derive a way to simulate

towering refuse piles without damaging the integrity of the mine-related tailings.

The Set Dressing Department added the decorative details to the movie set—furniture, fixtures, and various appointments. They were charged with covering the tailings, decorating the exteriors and interiors of structures, and adding all the finishing touches. They wired scrap metal, household appliances, industrial equipment, and myriad other junk items to lengths of chain link fencing at the top of the tailings. After securing one end of the fencing to the top of the pile with 18-inch steel stakes, the fencing was lowered over the side in vertical rows. Automobile hoods placed beneath the fencing at the top rim of the dumps protected the waste piles and allowed the decorated, heavy fencing to slide more easily over the edge. Crew members descended the pile and guided the fencing. The "junk piles" covered a 525 feet long by 70 feet high area. Car chassis, household appliances, and large hunks of sheet metal were stacked on top of the dumps to further extend the height of the pile. Cardboard, rusted cans, and plastic bottles were tied to camouflage nylon netting then rolled into "burritos" and unrolled over two smaller waste piles. A fence contractor installed a 420 foot long chain link fence topped with razor wire near the base of the tailing piles in previously disturbed areas. Set dressers stretched black painted cotton clothesline between historic and temporarily installed power poles to simulate electrical wiring.

Vehicle and foot traffic were confined to preexisting roads. The historic public road through the site has seen continuous use, but during film production access was limited. Personal crew vehicles and tracked vehicles were prohibited on site. Construction materials were off-loaded and staged in the previously disturbed settling ponds or along the road. A water truck sprayed the road for dust control. All potential ground disturbances were monitored. Sawdust from on-site construction was captured on ground cloths and all trash, including cigarette butts, deposited in appropriate containers. "Craft Services" provided lunch (make your own sandwiches), snacks, and beverages on site; they also were responsible for cleaning up any trash.

Construction activities proceeded in a fairly orderly fashion and were easily monitored from the top of the tailings pile or at the individual building locations. Since the production designer continually re-created the visual layout of the set, he often had to be reminded about ground disturbance restrictions. The construction phase blended the movie set so well with the historic fabric that new personnel involved in the succeeding phases of the project could not distinguish between the two. Local residents, who lived on the site or in the general area, liked the transformation and the new neighborhood. This seamless mix of structures and the attitude of local community members created problems for the monitor during the filming and subsequent wrap phase.

The Filming Phase

Filming meant the invasion of the site by electrical, lighting, sound, and camera personnel along with tons of equipment. BLM and the archeologist-monitor effectively closed all roads into the site. Access to the site was either by foot or via shuttles that ran from off site to a designated dropping-off spot.

The tradition of the movie industry is to get things down quickly and efficiently; "time is money" was more than a motto on the movie set. In their haste, movie personnel often had to be reminded of site restrictions; staff often forgot that not all of the structures were a movie fabrication. Since the movie set blended so well with the historic structures, the archeologist-monitor continually had to point out the restricted areas to the crew.

Prior to the film company's interest, local residents had free access to the site; consequently, they did not appreciate the access restrictions imposed by BLM and the film company. The presence of crew members or local residents in restricted, unsafe areas, and on-site in general, became a liability and compliance problem. The profusion of activities, the numerous pieces of portable equipment, and the huge menagerie of

Post-filming appearance of the blacksmith-machine shop and wooden trestle ruins associated with the Kelly Mine and a local resident's mobile home.

Designed and fabricated "historic residence" for filming of The Brave.

people made the filming phase the hardest to monitor.

The Wrap Phase

BLM's approval mandated that all imported sets, equipment, trash, refuse, debris, and waste be removed from public land. Since the construction and set dressing crews had seen the site prior to set construction, they were charged with clean-up. Materials were sorted and organized, then returned, sold, or hauled to dumpsters for disposal at landfills. The film's climactic demolition scene, in which heavy equipment destroys the town, and the eventual dismantling of the waste pile coverings created splintered and fragmented heaps. Consequently, the entire historic landscape required hand raking.

Construction had required auguring post holes, leveling portions of two disturbed areas for building new "houses," temporary removal of isolated historic artifacts, and cleanup of modern trash present at the site prior to filming activities. The greatly increased pedestrian and vehicular traffic obviously affected annual undergrowth and added to wear on the road. As part of the cleanup phase, the movie crew removed significant amounts of the modern residents' trash, including an abandoned mobile home.

BLM assessed no damages for failures to comply with any term or condition of the permit.

In-depth consultation with the BLM, the cooperation of all film personnel, and the presence of a full-time archeologist-monitor ensured the implementation of mitigative stipulations and strict compliance. Consequently, film production activities had minimal effect on the historic landscape of the Kelly Mine site.

Final Observations

During the beginning of the filming phase, the special effects coordinator remarked to the monitor that the film industry believes it has the right to do whatever it wants - invasion of house and home included. Film making, he astutely observed, is not a cure for cancer. The grip crew further warned the monitor about the Hollywood mentality; they advised to "Just Say NO" without hesitation and, if necessary, to actually stop production until conditions or personnel were in compliance.

Yes, there were headaches as an "archaeocop." The Mojave Desert in July and August is 120 degrees and night shoots last until sunrise. Yet, watching the "magic" of transforming the historic site into a movie set was incredible. The behind-the-camera experience has added a new understanding to all the facets of film making. The crews and cast were gregarious, interesting, and fun. The catering menu ranged from barbecued salmon to omelets to a smorgasbord of desserts; the mocha lattes at 2:00 a.m. kept the monitor awake through the numerous night retakes. Viewing the "dailies" (film from the previous day) added a different perspective on the reasons for the repeated shooting of each scene.

The site has been returned back to "normal." A visit to the Kelly Mine area does not reveal the frantic film making activities; however, a chat with people at the local store will unleash a host of stories. Unfortunately, *The Brave* was a major disappointment at the Cannes Film Festival; therefore, the movie most likely will not be released in the United States. This Hollywood "magic" is stored in boxes at a warehouse somewhere in Los Angeles, California.

Barbara J. Mackey is a staff historical archeologist with the cultural resource firm of Archaeological Research Services, Inc., Virginia City, Nevada. Barbara has investigated numerous mining sites throughout Nevada and California; however, her most recent project focuses on early-20th-century homesteads in northern California.

Homer E. Milford

The Threats to Our Mining Heritage
A Provincial Point of View

It may already be too late to preserve our national mining heritage. Perhaps, the best we can hope for is that federal agencies, state governments, or local communities will preserve what they feel is important. A few short years ago our nation's mining heritage dotted, if not covered, the landscape of the western states with head frames and waste piles providing a romantic image of mining for tourists and locals alike. Millions still enjoy the vista of surviving mining remnants on federal lands. However, this landscape will probably be gone in a decade. After that, our mining heritage will only be available by reading "ghost town" books or through visits to the relatively few well-preserved parks with mining features. The loss of our mining heritage in the wild will accelerate in the next few years, rather than diminish. Not because of the gradual effects of wind, weather, and vandals, but primarily due to well-intended government programs, professional mining-oriented artifact collectors, and new open pit mines.

Although there was an awakening of governmental interest in preserving the nation's mining heritage a decade ago, it did not lead to a National Mining Heritage Initiative. Archeologists and historians have developed guidelines and standards for the professional documentation of the mining landscape and the National Park Service has disseminated this information. However, implementation has been inconsistent in most states. Time is running out for anything approaching a comprehensive national program that will preserve enough of the significant aspects of our mining heritage. Future generations may only be able to experience and appreciate the nation's mining heritage through text and museum exhibits. Unless federal land management agencies and state governments quickly formulate goals for preservation, it will be too late to preserve anything but the memories.

Federal programs are the major threat to the mining landscape, but vandalism, artifact collectors, and new mining ventures are secondary threats. During the past decade rather than funding a National Historic Mining Initiative, Congress and federal agencies have responded to public concerns regarding environmental pollution and safety. For the most part, public and governmental perception has characterized abandoned mines as environmental and safety hazards that need to be removed from the landscape. What a generation ago was considered a romantic part of our heritage is now commonly viewed as an imminent danger. As we have become a nation of litigants, pressure has increased to effectively remove from public lands anything that could result in a litigative action. All mine closure or safeguarding techniques are judged by how likely they are to fail or be breached by the public. As a result, fencing is usually considered unacceptable, except in overtly patrolled sites, as a means of safeguarding for abandoned historic mine sites. Even cable nets or steel grates are perceived as less desirable, than total mine closure through permanent backfilling.

Annually, millions of dollars are spent on safeguarding and/or remediating environmental problems associated with abandoned coal and hard rock mines in the United States. New federal and state initiatives appear regularly to correct safety and liability issues associated with abandoned mine sites. The official designations for some of these programs are misleading and sadly ironic such as, the Western Regional Mines Restoration Partnership, whose primary concern focuses upon restoration of the pre-mining environment, rather than preservation of our mining heritage. These programs reflect our nation's going full-circle from viewing old mines as technological heritage to viewing them as environmentally cor-

Wrought iron fence being constructed around the Old Castillian Pit turquoise mine in Cerrillos Mining District, New Mexico. This mine may have been a major turquoise source for the Chaco Culture and was worked from about 1000 AD to 1915. Though the ideal closure for the mine landscape, few sites are patrolled well enough for fencing to be a secure safeguarding technique.

rupt landscapes. Little in the way of a rational discussion of the complex and diverse values of old mines has occurred; currently, we seem guided by a negatively-biased, environmentally-damaged national perspective of our once-important mining heritage.

If the federal government feels obliged to initiate national programs to correct the evils or mistakes of past actions on soil conservation, wildlife and other natural resources, it should also evaluate the effect of past and current federal programs on the nation's mining heritage. In the southwest, structures and equipment associated with 19th-century mines and mills survived fairly intact until the federal government's World War II scrap metal drives. In New Mexico, state prison inmates were used to cut up and cart off the Albemarle Mill for its metal scrap. The loss of equipment to the war effort resulted in a fundamental alteration of numerous historic mills and mines.

Environmental Protection Agency

In the last two decades, the Environmental Protection Agency has obliterated many mine and mill sites with minimal consideration for their historic values. Remediation actions by the Environmental Protection Agency were provided an expedited approach vis-à-vis the National Historic Preservation Act in order to ensure prompt response to the treatment and management of toxic sites. Although initially important, this approach makes less sense today. The complexity of many mining-related sites has resulted in decades-long debates regarding the correct method for cleanup efforts. Even when a decision to clean up a mining site has been reached, the agency frequently expends hundreds of thousand to millions of dollars and requires several months to years to study the toxicity of a site and to develop a remediation plan. In most cases, the professional study of the historic record and archeological recordation would not impede the Environmental Protection Agency's decision-making process, its response time, nor significantly raise costs associated with its final course of action. Although the Environmental Protection Agency—and its mirror-image state counterparts—are probably the clearest example of governmental programs which adversely impact the historic integrity of our mining-related resources, they are not alone.

National Historic Preservation Act

Most federally funded projects, and all projects on federal lands, are subject to the National Historic Preservation Act. This legislation requires an evaluation of the potential effects of the proposed undertaking on our cultural heritage by the respective state or tribal historic preservation officer. The preservation office's evaluation of mining sites as they are usually encountered in the Section 106 federal-state review process ensures some level of professional documentation, but this decision-making process rarely leads to long-term planning with respect to the preservation of important mining-related sites, particularly on a programmatic agency-wide or statewide basis. In some states, initial efforts have been taken toward development of a Mining Heritage Overview. To date, results have been mixed. Few of these planning initiatives are adequate enough to guide federal or state land management agencies in the development of a meaningful approach for evaluating and managing the mining sites under their care.

As there is little likelihood of a National Mining Heritage Initiative, what can be done? Perhaps the best that can be hoped for is that appropriate administrative officials in pertinent federal agencies will discover creative strategies to preserve what they consider are their management unit's best mining sites. It appears that in the next few years several hundred million dollars may be appropriated to irrevocably close and clean up abandoned mines in the United States. Thus, it seems likely that a mere decade from now, few historic mines will not have been affected by government-regulated actions. How well the closure of mines for safety and the associated treatment of environmental problems preserves the information and artifacts of our mining heritage may be dependent on land management agency decisions as well as the respective preservation office's knowledge of its state's mining history and its concomitant sensitivity to that heritage.

Abandoned Mine Land Programs

In 1977, Congress passed the Surface Mining Control and Reclamation Act (P.L. 95-87) which includes a tax on active coal mines. These funds are subsequently provided to states through annual grants by the Office of Surface Mining Reclamation and Enforcement. These monies are specifically aimed at reducing safety hazards and environmental problems resulting from two centuries of coal mining, but increasingly the funds are applied towards mitigation of hard-rock mines in the west. The Office of Surface Mining is staffed with a single archeologist, who possesses nationwide responsibilities; however, much of his time appears to be assigned to other duties. The Office of Surface Mining has promulgated little in the way of guidelines or manuals to assist state and tribal Abandoned Mine Land Bureaus concerning the professional documentation and/or conservation of our mining heritage. Levels of recordation and sensitivity to historic mining resources varies from state to state, as well as over time, depending on the respective preservation office. The Office of Surface Mining focuses on the administrative bottom line, that is, how many mine openings were

successfully closed and at what cost. In contrast, significant strides have been made in the last decade by state-level abandoned mine programs with respect to the recognition of the historic and cultural values of the nation's mining heritage.

Preservation Agencies

The foremost objective of most federal and state abandoned mine programs are to reduce public danger and correct environmental problems at the least cost possible. Dollars expended on recordation and preservation are often explicitly limited to satisfactorily accomplish any professional requirements stipulated by preservation offices or by federal agency staff for Section 106 clearance. If the decision-making process associated with environmental and similar public safety-oriented programs do not adequately record or preserve the nation's mining heritage, that failure is as much attributable to the respective preservation office as to the agency undertaking the proposed project.

Most federal agencies can only justify spending funds on mining-related cultural resource surveys for Section 106 compliance purposes to the extent, or lack thereof, required by a preservation office. Frequently, the professional standards established by a preservation office become the federal agencies' threshold for the quality of its mine-related investigations. Often, changes in preservation office staff occasions changes, for better or worse, in agency perspective and/or its standards. These circumstances suggest the need for a nationally accepted standard for mine-related cultural surveys. In particular, some preservation offices appear to place undue reliance upon site recordation under the premise that the site's mining history can be subsequently researched by future generations. However, this is only true to a degree. If preliminary cultural resource studies do not adequately research the archival record to the extent that most mine-related features can be identified by mine or claim name, there is little likelihood that site-specific history can be filled-in by future scholars. There also appears to exist a general absence of professional interest in the underground nature of historic mines. It should be a standard requirement that mine-related cultural resource surveys include copies of mine maps where they are available. Due to legitimate safety considerations, researchers rarely enter old mines and thus generally can not differentiate between a prospect and a small mine. Historic maps are essential in the evaluation of the function of various surface openings and other mine-related facilities. The general decline in the nation's mining industry may result in a similar decline in state mining bureaus which will lead to a loss of expertise and currently unpublished mine records.

Although historic mines are infrequently entered by archeologists or historians, there exist plenty of people who enter them to collect mineral specimens and mining artifacts. They are often well-equipped and seldom appear in the statistics of abandoned mine deaths. There are numerous mining-related artifact collectors as well as several journals which are devoted to these artifacts and their sale. Prices for mine-related material have increased dramatically in the past decade. Very few mines in the southwest have not been worked over by these people. These individuals argue that the artifacts that they are removing are not used or recognized; in reality, it is a significant loss of information concerning our nation's mining heritage. Unfortunately, some aggressive collectors use portable torches and gas saws to cut through metal gates on mine openings that were designed to safeguard the public. Such vandalism discourages the widespread use of this, otherwise functional, type of closure. Vandals likewise generate high maintenance costs for grate and cable closures which inhibits the widespread use of this type of low impact closure. Vandalism occasionally leads to backfilling mine openings with adjacent spoil piles, especially in nonpatrolled areas. Though the safest and cheapest method of safeguarding, backfilling has the greatest impact on the historic landscape. This approach also dramatically increases the humidity inside the mine resulting in the destruction of surviving mine-related artifacts. Only if a mine contains significant bat habitat or is judged for some other reason to warrant a metal closure is one used.

At best, there seems to be sporadic attempts to improve the overall quality of mining-related cultural resource reports. Most federal agencies and preservation offices assume that any competent historian or archeologist can undertake a comprehensive mine-related investigation; despite analysis that an interdisciplinary group is more appropriate (Baker and Huston 1990). The professional training and experience of many contract archeologists is usually centered on Native American cultural history and as such, generally have very little understanding of the technological complexity involved in a mine or mill operation. State historic preservation offices deserve both credit and/or blame for the overall quality of some cultural resource reports. Improving preservation office knowledge of and sensitivity for historic mining resources is an obtainable goal in this decade. Additional federal-state partnerships and creative approaches are needed to provide necessary guidance with respect to the criteria that should be used in evaluating and selecting which sites should be preserved. The only thing we can be sure of is

that future generations will fault us for what was not preserved.

Although the National Park Service, state governments, and local groups have preserved and interpreted individual mining sites, much remains to be done. Efforts to preserve America's mining heritage still seems to be confined to a local community or state perspective. Many individuals, organizations, and government entities are aggressively acting to preserve the nation's mining heritage, but a national framework doesn't exist. No overarching concept of mission, goals, or objectives exist as to what mining-related sites, artifacts, or archival records should be preserved for the best overall national result. The decade-old dream of a national initiative, if it occurs, will follow, rather than lead the provincial efforts at preservation. Each locality, state or federal land management agency is fending for itself. Relatively few mining sites will be affected by programs primarily aimed at preserving our mining heritage; most will be impacted by federal and state programs whose primary mission is reduction of public danger and potential liability. The degree to which heritage preservation efforts interact with these programs will determine the nation's success, or lack thereof, in preserving our heritage in the next decade.

In the past few decades, great strides have been realized with respect to the development of mining-oriented museums or parks established to preserve that heritage. Concerned citizens and cultural resource mangers continue to promote conservation efforts during this last decade of our mining heritage in the wild. The critical decisions on what should be preserved, and how it will be accomplished, will be made locally, or at best regionally, by land management agencies with some professional input from state historic preservation offices. The mining heritage sites that will be available to future generations will be largely confined to those chosen by land management agencies for preservation in the next few years. No one, but the ignorant, will have a clear conscience when federal and state environmental and safety programs are completed and the majority of our historic mines are permanently sealed. The best, and possibly the only hope, is for the rest of us to assist in any possible way the cultural resource managers in government land management agencies to more effectively initiate mining heritage conservation plans. It is their provincial efforts, at what ever level they feel they can impact, in their land management agencies that will probably determine what sites survive of our mining heritage for future generations in the west.

Homer E. Milford is the Environmental Coordinator for the Abandoned Mine Land Bureau, New Mexico Mining and Minerals Division, Santa Fe, New Mexico.

Printed on recycled paper

CRM

U.S. Department of the Interior
National Park Service
Cultural Resources (Suite 350NC)
1849 C Street, NW
Washington, DC 20240

OFFICIAL BUSINESS
PENALTY FOR PRIVATE USE $300

VOLUME 21 • NO. 7
Cultural Resources
Washington, DC

FIRST CLASS MAIL
Postage & Fees Paid
U. S. Department of the Interior
G-83