Steel Water Towers Associated with South Dakota Water Systems, 1894-1967

An Historic Context

South Dakota State Historic Preservation Office

This report has been financed in part with the Federal funds from the National Park Service, U. S. Department of the Interior.

This program receives Federal Financial assistance from the National Park Service. Under Title VI of the Civil Rights Act of 1964, Section 504 of the Rehabilitation Act of 1973, the American With Disabilities Act of 1990, and South Dakota law SDCL 20-13, the State of South Dakota and U. S. Department of the Interior prohibit discrimination on the basis of race, color, creed, religion, sex, disability, ancestry or national origin. If you believe you have been discriminated against in any program, activity, or facility as described above, or if you desire further information, please write to: South Dakota Division of Human Rights, State Capital, Pierre, SD 57501, or the Office of Equal Opportunity, National Park Service, 201 I Street NW, Washington, D. C. 20240.

STEEL WATER TOWERS ASSOCIATED WITH SOUTH DAKOTA WATER SYSTEMS, 1894-1967

An Historic Context

Prepared for:

South Dakota State Historical Society
900 Governors Drive
Pierre, SD 57501

Prepared by:

Gregory R. Mathis

with contributions by

John Chlebeck, PE

The 106 Group Ltd.
The Dacotah Building
370 Selby Avenue
St. Paul, MN 55102

and

Short Elliott Hendrickson
3535 Vadnais Center Drive
St. Paul, MN 55110

September, 2012

TABLE OF CONTENTS

Table of Contents i

List of Figures iii

List of Tables iv

1.0 Introduction 1

1.1 PURPOSE OF THIS DOCUMENT 1

1.2 METHODOLOGY 2

1.3 GEOGRAPHIC AND TEMPORAL LIMITS 3

1.3.1 Geographic Boundaries *3*

1.3.2 Temporal Boundaries *4*

1.4 TYPES OF PROPERTIES 5

2.0 Historical Overview 7

2.1 EARLY DEVELOPMENT OF WATER WORKS IN THE UNITED STATES 7

2.2 THE HISTORY OF WATER TOWERS ASSOCIATED WITH WATER SYSTEMS IN SOUTH DAKOTA 10

2.2.1 Geographical Background *10*

2.2.2 Early Water Systems, 1879-1903 ..... *10*

2.2.2.1 The Artesian Well Craze 14

2.2.3 The Rise of the Steel Water Tower, 1894-1936 ..... *15*

2.2.3.1 Fire Protection 18

2.2.3.2 Regulation 20

2.2.4 Federal Relief Construction, 1933-1941 ..... *23*

2.2.4.1 Public Works Administration 24

2.2.4.1 Works Progress Administration 28

2.2.5 Increased Regulation, New Forms, and the Post World War II Boom, 1936-1967 ..... *29*

2.3 EVOLUTION OF STEEL WATER TOWER DESIGN 31

2.3.1 Introduction *31*

2.3.2 Early Elevated Water Storage Structures *32*

2.3.3 The Development of All-Steel Water Towers, 1893-1905 ..... *32*

2.3.4 Elliptical Bottoms, Increased Capacities and Aesthetics, 1907-1928 ..... *34*

2.3.5 New Shapes and Forms, 1928-1967 ..... *36*

2.3.5.1 Advent of Welding 40

2.3.5.2 Site Planning and Aesthetics 41

2.4 WATER TOWER MANUFACTURERS AND FABRICATORS 41

2.4.1 Chicago Bridge & Iron Works *42*

2.4.2 Pittsburg-Des Moines Steel *43*

2.4.3 Minneapolis Steel and Machinery Company *45*
2.4.4 Omaha Structural Steel Works *46*
2.4.5 W. E. Caldwell *46*
2.4.6 Other Designers, Steel Suppliers, and Fabricators *46*
3.0 The Identification and Evaluation of Steel Water Towers Associated with Water Systems in South Dakota 49
3.1 INTRODUCTION 49
3.2 WATER TOWER TYPES 49
3.2.1 Legged Towers *50*
3.2.1.1 Leg types 50
3.2.1.2 Traditional Style Towers 51
3.2.1.1 Double Ellipsoidal 52
3.2.1.2 Torus Bottom 52
3.2.1.3 Spherical 52
3.2.1.1 Toro-Spherical and Toro-Ellipsoidal 52
3.2.2 Single Pedestal *58*
3.2.2.1 Spherical 58
3.2.2.2 Spheroid 58
3.3 ALTERATIONS 61
3.4 ASSOCIATED RESOURCE TYPES 61
3.5 REGISTRATION REQUIREMENTS 62
3.6 INTEGRITY 65
4.0 Conclusion 68
5.0 Bibliography 70
Appendix A: Glossary 77
Appendix B: Photographic Glossary 85
Appendix C: List of Known, Extant Steel Water Towers Associated with Water sytems in South Dakota, 1894-1967 94
Appendix D: Example Water System Plan 98

LIST OF FIGURES

FIGURE 1. SIOUX FALLS WATER TOWER NO. 2, 1896 8

FIGURE 2. FIRST WATER TOWER IN VERMILLION 11

FIGURE 3. ARTESIAN WELL 14

FIGURE 4. WATER TOWER UNDER CONSTRUCTION IN RAPID CITY 15

FIGURE 5. WATER TOWER UNDER CONSTRUCTION IN RAPID CITY 15

FIGURE 6. DELL RAPIDS WATER TOWER 19

FIGURE 7. SIOUX FALLS WATER TOWER 32

FIGURE 8. SOUTH DAKOTA STATE PENITENTIARY WATER TOWER, SIOUX FALLS 32

FIGURE 9. J&M JOINT SYSTEM, U. S. PATENT 572,995 33

FIGURE 10. ELLIPTICAL BOTTOM TANK, U.S. PATENT 857,626 35

FIGURE 11. DOUBLE ELLIPSOIDAL TANK, U.S. DESIGN PATENT 91,508 35

FIGURE 12. SPHERICAL TANK, U.S. PATENT 1,947,515 38

FIGURE 13. RADIAL CONE TANK, U.S. PATENT 1,844,854 39

FIGURE 14. TORO-ELLIPSOIDAL TANK, U.S. PATENT 2,961,118 39

FIGURE 15. SPHEROID TANK, U.S. PATENT 2,657,819 40

FIGURE 16. SUPPORT STRUCTURE LEG TYPES 50

FIGURE 17. STANDARD WATER TOWER SPECIFICATIONS 51

FIGURE 18. TRADITIONAL STYLE, HEMISPHERICAL BOTTOM WATER TOWER 53

FIGURE 19. DOUBLE ELLIPSOIDAL WATER TOWER 54

FIGURE 20. SPHERICAL WATER TOWER WITH LEGS 55

FIGURE 21. TORO-SPHERICAL WATER TOWER 56

FIGURE 22. TORO-ELLIPSOIDAL WATER TOWER 57

FIGURE 23. SINGLE PEDESTAL SPHERICAL WATER TOWER 59

FIGURE 24. SPHEROID WATER TOWER 60

FIGURE 25. VERMILLION WATER PLANT WITH ORIGINAL WATERWORKS AND WATER TOWER IN THE BACKGROUND 61

FIGURE 26. ORIGINAL VERMILLION WATER WORKS 61

FIGURE 27. FILTRATION PLANT, LAKE KAMPESKA, WATERTOWN 62

LIST OF TABLES

TABLE 1. GROWTH IN THE NUMBER OF WATER WORKS IN THE UNITED STATES SINCE 1800 9

TABLE 2. GROWTH IN THE NUMBER OF WATER WORKS IN SOUTH DAKOTA SINCE 1880 10

TABLE 3. WATER WORKS IN SOUTH DAKOTA AT THE END OF 1884 12

TABLE 4. WATER WORKS IN SOUTH DAKOTA AT THE END OF 1896 13

TABLE 5. TOWNS WITH POPULATIONS OF 400 OR MORE WITH PUBLIC WATER SUPPLIES IN SOUTH DAKOTA AS OF JUNE 1922 16

TABLE 6. PWA PROJECTS COMPLETED OR UNDER CONSTRUCTION IN SOUTH DAKOTA BY APRIL 1935 25

TABLE 7. PWA PROJECTS APPROVED AND FINANCED, BUT NOT YET UNDER CONSTRUCTION IN SOUTH DAKOTA BY APRIL 1935 25

TABLE 8. NON-FEDERAL WATER WORKS PROJECTS APPROVED FOR PWA FUNDING IN SOUTH DAKOTA WITH DATA WATER TOWERS (IF KNOWN), 1933-1938 25

1.0 INTRODUCTION

1.1 PURPOSE OF THIS DOCUMENT

This study of historic steel water towers associated with drinking water systems in South Dakota was conducted by The 106 Group, Ltd. (106 Group) on behalf of the South Dakota State Historic Preservation Office (SHPO) in 2011-2012. The intent of the following historic context is to provide a broad overview of these ubiquitous resources throughout the state of South Dakota during the period 1894-1967.

To the untrained eye, water towers can often appear very similar to one another, which can make it difficult to identify what makes one distinct. With so many similar, yet highly dispersed resources across the state, it is also a challenge to compare and contrast water towers in order to identify those that stand out as being historically significant. Therefore, a goal of this historic context is to provide cultural resources professionals with a tool they can use to identify and evaluate the historical significance of steel water towers associated with municipal drinking water systems across the state of South Dakota to determine their eligibility for the National Register of Historic Places. Another goal of this document is to act as a tool to help the SHPO fulfill its obligation pursuant to Section 106 of the National Historic Preservation Act and South Dakota Codified Law 1-19A-11.1.

Historic contexts are an important component of the preservation planning process. *The Secretary of the Interior's Standards and Guidelines* define a historic context as "a unit created for planning purposes that groups information about historic properties based on a shared theme, specific time period, and geographical area." In essence, they identify significant themes, time periods, and geographic areas encompassed by the context.

Depending on the step in the preservation planning process, a historic context may attempt to answer different questions. During historic resources surveys, where the goal is to identify historic resources, historic contexts provide a framework for answering the question *"what types and kinds of historic resources do we have?"* For the evaluation and registration of historic resources, historic contexts provide information on what is significant and important to list in the National Register of Historic Places and protect, in order to answer the question *"why should we care about this resource?"*

South Dakota's Historic Contexts Document provides an overview of historic resources in South Dakota, broken down by temporal and spatial themes. This document guides the SHPO and its partners in developing goals and priorities for survey efforts. It also helps identify gaps in research, under-recognized resources, and future registration possibilities (South Dakota State Historical Society 2011).

The following historic context is intended to supplement *South Dakota's Historic Contexts Document* by providing more detailed information on steel water towers associated with drinking water systems across the entire state of South Dakota. This context covers the period from the construction of the first all-steel water tower in South Dakota in 1894, through 1967, when major shifts started to take place as more stringent water quality legislation was enacted, leading to the development of regional water systems, and as new water tower designs were introduced. This historic context includes a historic overview of

the early development of water works and water towers in the United States, a developmental history of water towers in South Dakota, a short history on the evolution of water tower design, and descriptions of major water tower manufacturers with a presence in South Dakota. It also includes a classification system for water towers found in South Dakota and descriptions of the most common water tower types, including significance guidelines, registration requirements and integrity guidelines, and a glossary of water tower terminology.

1.2 METHODOLOGY

In 2010, the SHPO prepared a new five-year preservation plan for South Dakota, entitled: *Statewide Preservation Plan, 2011-2015*. This plan identified public buildings and sites as one of the most threatened property types in the state. Water towers are one of the property types that fall into this category of resources. In South Dakota, historic water towers are facing an increasing threat of demolition due to maintenance needs that many cities and towns perceive as excessive compared to new construction, they are exceeding their useful lives, or they can no longer meet the supply demands of a growing community.

Observing an increasing number of requests for reviews of water tower replacement projects pursuant to Section 106 of the National Historic Preservation Act and/or SDLC1-19A-11.1, the SHPO determined that water towers were underrepresented in existing surveys and that there was often not enough information available on them to make informed planning decisions. In response, a three-phase study was conducted over the course of two years to expand the level of information known about water towers associated with drinking water systems across the state.

The goal of Stage I, conducted in March and April 2011, was to conduct initial background research, identify extant water towers associated with municipal drinking water systems in the state, and develop a survey strategy that included selection criteria for including water towers in a statewide survey. This effort included conducting a query of the SHPO database to identify previously surveyed water towers. The query identified 36 previously inventoried water towers associated with drinking water systems in the state. The second step was to conduct a query of Department of Environmental and Natural Resources (DENR) records to identify in-service elevated water storage tanks in the state. This query identified 289 potential in-service water towers in South Dakota. This query also identified owners, contact information, locational data, and capacity data for most towers. Subsequently, a SHPO identification number was assigned to each water tower to give it a unique identifier. A questionnaire was then developed and sent to water tower owners identified in DENR records. The purpose of this questionnaire was to gather additional baseline data that could be analyzed to develop the selection criteria for the field survey. The questionnaire requested basic information on the name, location, owner, associated resources, and information on various aspects of each water tower. It also requested data on construction date, builder, type, capacity, tank shape, materials, and support structure type for each water tower. This effort resulted in the identification of three non-extant water towers, including one previously surveyed water tower, thereby reducing the total numbers of known water towers to 286. Of the 286 potential extant and in-use water towers, 199 responses were received, leaving 87 for which there was no current data. Of these 87, seven have been previously

surveyed and were included in the SHPO, so the total number of water towers with no data available was 80. Data from the survey was then analyzed to develop criteria for selecting 152 water towers to include in a statewide survey.

Stage II consisted of a survey of 152 water towers associated with municipal drinking water systems located across South Dakota; 139 at a reconnaissance level and 13 at an intensive level. The survey was conducted in June and July 2011. During the field survey, a site visit was made to each water tower in order to document the structure. A Historic Sites Survey Structure Form was then prepared for each structure that included all required fields, a sketch map of the site, a UTM point, and at least one digital photograph of the property. Associated resources, such as pump houses and other ancillary facilities were noted on the inventory forms and sketch maps.

Stage III consisted of the preparation of this historic context for water towers associated with public water systems in South Dakota. This study was prepared between October 2011 and August 2012. This context is based on archival research and informed by the results of the 2011 field survey. Following the completion of the context, the 152 water towers surveyed in 2011 were evaluated using the registration requirements contained within this historic context to determine their eligibility for the National Register of Historic Places.

1.3 GEOGRAPHIC AND TEMPORAL LIMITS

1.3.1 Geographic Boundaries

The geographic limits of this historic context include the entire state of South Dakota. While steel water towers associated with drinking water systems are found across the entire state, two major factors influenced the distribution of water towers built prior to 1967: population concentration and geography. Prior to the development of rural water systems beginning in 1967, most water towers were located in cities and towns with populations of at least 100 or more residents, and the larger the population, the greater the need was for its water system to have a storage structure. Therefore, the frequency with which water towers exist in South Dakota closely corresponds with population distribution across the state, with some exceptions due to specific geographic circumstances.

Settlement patterns in South Dakota are largely based on geography. South Dakota exhibits marked geographic variation from east to west. The eastern half of the state is relatively flat, fertile, and receives sufficient rainfall to be a prime agricultural region where corn, wheat, and other crops are grown. The advent of farming led to the development of a concentrated, web-like network of small towns built along railroad branch lines where farmers delivered crops for shipment to larger markets and the railroads delivered products and goods for purchase by farmers. It also includes a series of larger regional centers and railroad hubs such as division points and interchange of different lines (Hufstetler and Bedeau 2007:6). Reflective of its denser concentration of towns and cities, the greatest number percentage of water towers are located in this region of the state.

The geography of the area between the Missouri River and the Black Hills is typically more uneven terrain, less fertile, and more arid than the eastern half of the state. Due to these

factors, most of this region developed as ranchland, although there are some pockets of farmland that exist. Correspondingly, this less intensive land use pattern resulted in the development of fewer and smaller towns, and a relatively skeletal railroad network (Hufstetler and Bedeau 2007:6). Accordingly, there are fewer water towers constructed prior to 1967 in this region of the state, with most being located in the eastern and southern areas of this region and few examples in the northwest part of this region. However, with the advent of rural water systems more water towers have been built in this region since 1967.

The Black Hills extend in a north-south direction along the western edge of South Dakota. As the only mountain range in the state, the Black Hills represent not only the major topographic, but also economic, exception to the agricultural based economy of South Dakota. In this region, the primary economic activities are mining and logging, which resulted in a strong industrial base that was less common elsewhere (Hufstetler and Bedeau 2007:6).

On the plains of eastern South Dakota and throughout much of the area west of the Missouri River, although costlier to construct than a standpipe or ground based reservoir, water towers were the preferred type of water storage structure since their height is what pressurizes the water system. This allowed water works to avoid the need for constantly operating pumps to pressurize the system since they were expensive to operate and maintain. In the Black Hills, many towns could take advantage of the vertical drop of surrounding hills and mountains to pressurize their water systems. In this area, many towns dammed streams and built reservoirs at higher elevations to create source supplies, while others built standpipes or other ground based reservoirs on hillsides since they were cheaper to build than water towers and they did not need the extra pressure provided by an elevated tank.

Due to the combination of these factors, approximately two-thirds of the existing water towers in South Dakota are located in the eastern half of the state with the greatest concentration in the southeast region. Water towers are far less common in the Black Hills and the northwest corner of the state.

1.3.2 Temporal Boundaries

Although the first water works in South Dakota was constructed in Deadwood in 1879 and a number of all-wood water towers were subsequently built by larger towns across the state in the 1880s and early 1890s to provide for fire protection and drinking water, there are no extant all-wood water towers from this period in South Dakota. Therefore, the temporal limits of this study begin in 1894, when the first all-steel water tower in the state was erected in Flandreau.

Except in cases of exceptional significance, the National Register requires properties to be at least 50 years old to be eligible for inclusion in the Register. Since all-steel water towers have continued to be built in South Dakota through to the present day, this posed a challenge for identifying a cutoff date for this study. In the interest of allowing this context to remain relevant for a longer period, rather than using an arbitrary 50-year cutoff, a more logical date was sought for the cutoff date. While there is no clear-cut date for ending the study, the year 1967 was chosen because it corresponds with the start of a substantial shift in the state in the types of water systems being developed and the types of water towers being constructed. In

terms of water system development, the late 1960s are characterized by efforts to organize and develop the first rural water systems in South Dakota in order to comply with more stringent drinking water standards. The first rural water system to go online was the Rapid Valley Water Service in 1967. The Butte-Meade Sanitary Water District was completed the following year, and over the next few years, a number of additional rural water systems were developed. After the South Dakota Legislature created the State Water Plan in 1972, more rural water systems came online and many small towns began to connect to these systems, either to enhance or eliminate their own water systems. The late 1960s also see the introduction of a new type of water tower, the pillar (also commonly known as the hydropillar). Introduced in 1962, the first extant pillar style water tower constructed in South Dakota was in Beresford in 1969.

1.4 TYPES OF PROPERTIES

This historic context focuses on all-steel water towers in South Dakota that are associated with drinking water systems. Specifically, it focuses on water towers that were completed prior to the development of the first rural water system in the state in 1967. It includes water towers built as part of municipal water works and water systems, as well as those built for large complexes such as hospitals, schools, and other large institutions. The primary criterion for inclusion in this group is use – water towers whose primary purpose is to store potable water for human consumption, and to provide a reserve for fire protection. Water towers whose primary purpose is to provide the water storage need of an industrial complex and those built by railroads to service steam locomotives are generally excluded from this group. While water towers that serve an industrial complex may utilize the same designs as water towers constructed by water systems, and may even store water for human consumption, their primary purpose is different. While industrial water towers are excluded from this study, the following historic context can provide a basis for studying industrial water towers.

Historically, a number of different terms have been used to describe these structures, including water towers, elevated water storage structures, and elevated tanks. In her seminal work on the history of elevated water storage structures in the United States, Carol Ann Dubie uses the following definitions to describe the various types of water storage structures: "a water tower is a tank supported on brick, stone, or concrete tower; a standpipe is a wrought iron, steel, or concrete column rising from a ground level foundation and containing water for its entire length; and an elevated tank is a wood or metal tank supported on an open trestle" (Dubie 1980:1).

Since the following study includes several structure types developed after 1940 that do not fit into Dubie's classification system, rather than attempting to develop a new term for these structures, instead this study shall simply use a broader, more encompassing definition for water towers. For the purpose of the following study, "***water tower" shall mean an elevated wood or metal tank supported by a brick, stone, or concrete tower; an open trestle of metal or wood construction; or a steel or concrete pedestal***. Since this study focuses on steel water towers, the term shall be used primarily to describe an elevated steel tank resting on a steel trestle or single pedestal.

For clarification purposes, there are a number of other types of related water storage structures in South Dakota that are not covered by this context. Water towers constructed

by railroads in the late nineteenth through the first half of the twentieth century for servicing steam locomotives are not included in this context because they are substantially different in terms of historic use, design, and the areas from which they may derive historic significance compared to those constructed by municipalities for fire protection and drinking water purposes. While standpipes are another type of water storage structure that were often built by a water system instead of a water tower, they are not included in this study because they have a substantially different developmental history than all-steel water towers. In addition, standpipe designs are more closely related to other types of storage structures, such as petroleum storage tanks, than they are to elevated storage structures.

2.0 HISTORICAL OVERVIEW

2.1 EARLY DEVELOPMENT OF WATER WORKS IN THE UNITED STATES

Water is among the most basic human needs and without it, we could not exist. For thousands of years, humans have sought to develop systems for providing both urban and rural areas with a reliable source of water. The oldest known system for providing water was a series of aqueducts in the form of tunnels constructed in Persia around 4,000 B.C. to carry water from mountain foothills to plains areas for irrigation and domestic use. The most well known early public water systems were built by the Roman Empire more than 2,000 years ago. The Romans were able to supply over 40 gallons of water per person per day, and at the height of this system, it had the capacity to provide nearly 300 gallons a day per person (James 1998).

Prior to the advent of municipal water systems in the United States, most Americans used, on average, only two to three gallons of water per day. Consumption was limited by the fact that water had to be "fetched" by manually pumping it from a well and carrying it to a home or business for use. For those fortunate enough to have an indoor outlet, water still had to be pumped manually (Anfinson 2010).

The first publically owned water and sewer system in the United States was constructed by a Moravian settlement in Bethlehem, Pennsylvania in 1754. The water supply portion of this system relied on spring water pumped through bored logs (James 1998).

At the beginning of the nineteenth century, there were only 17 water works in the United States, mostly confined to urban areas on the East Coast (Dubie 1980:6). However, with the advent of the Industrial Revolution in the United States in the early nineteenth century and corresponding growth of cities, demand for water increased. To meet this demand the nation's largest cities began to build water works to provide residents and industry alike with water. In 1801, Philadelphia became the first major city in the United State to build a water works. This early system relied on steam engines to pump water through bored logs and later cast iron pipe. This system was deemed a failure due to its construction cost and unreliability due to leaking and bursting logs, as well as frequent engine failures (James 1998).

As cast iron pipes and steam engines were perfected in the mid-nineteenth century, the number of cities that developed water systems steadily grew. In 1842, New York City built a dam on the Croton River in Westchester County and constructed the 33-mile long Croton Aqueduct from the reservoir to the city, thus providing New York with a reliable supply of fresh water. That same year, Chicago built its first water works, which was supplied by Lake Michigan. Boston followed suit in 1848 when it built a water works comprised of a series of reservoirs and a distribution system. Washington DC subsequently built an aqueduct from a supply source to the city in 1854 (James 1998).

As the Industrial Revolution spread across the United States in the nineteenth century, urban populations grew and Americans became more prosperous. With increased affluence came pressure to improve living conditions. In response, large cities built water systems to meet this demand. When water became available at the turn of a spigot, per capita consumption

rapidly increased to 50, then 100 gallons per day, and the rate continued to grow (Anfinson 2010). By the start of the twenty-first century water system designers estimate that on average, Americans consume 150 gallons of water per day (Hayes 2005:74).

Faced with an exponentially increasing demand due to growing populations and increasing per capita consumption, water works engineers devised water delivery and storage systems to meet the demand for water and address fluctuations in use. This led to the development of an array of solutions ranging from storage reservoirs, to standpipes, and elevated water storage structures (water towers). As water systems and storage structures grew in size and complexity, an increasingly specialized body of engineering knowledge was required to design them. However, by the early 1880s there was an increasing awareness of the need for oversight of water works. As the number of water works grew by the day, and as they became more complex, there was an increasing desire to develop standards for design and construction, to avoid a number of well-known early failures, as well as to address concerns about health and hygiene. A major step in this effort occurred on March 29, 1881, when 22 individuals representing water systems in Illinois, Indiana, Iowa, Kansas, Kentucky, and Tennessee met in St. Louis and founded the American Water Works Association (AWWA) (Hoffbuhr 2006). The constitution they adopted stated that the purpose of the organization was to provide "for the exchange of information pertaining to the management of water-works, for the mutual advancement of consumers and water companies, and for the purpose of securing economy and uniformity in the operations of water-works" (Hoffbuhr 2006). Since its creation, the AWWA has provided leadership in developing regulations governing water supplies, creating standards for water works design, and water system operations. Subsequent to the establishment of the AWWA, manuals of standards and practices for designing water, sewer, and even power systems were developed in the late 1880s.

FIGURE 1. SIOUX FALLS WATER TOWER NO. 2, 1896 (Courtesy Siouxland Heritage Museums)

Another major event that triggered the rapid development of water works across the United States in the second half of the nineteenth century occurred in 1854, when a study by John Snow determined that cholera spread through contaminated water. As urban populations increased, so did the amount of waste and sewage. With growing amounts of sewage and garbage being deposited into privies or dumped into rivers and streams to be "washed away," the contamination of water supplies increased. As a result, first cholera, and later typhoid, outbreaks became increasingly common. With Snow's discovery of the connection between water and the spread of disease, a national hygiene movement took hold in the country. While 1877 marked the last major cholera outbreak in the United States, a lethal new water-borne disease was started to sweep across the country–typhoid. By 1890, the typhoid death rate in some cities exceeded 100 per 100,000 people (Hoffbuhr 2006).

To address concerns about hygiene, the AWWA and others turned their attention to improving the safety of water. Much of the AWWA's early efforts were focused on raising awareness about protecting water supplies from contamination and on the importance of filtration systems. In 1892, the AWWA issued *Memorial to Congress Praying for a National Law to Restrict Pollution of Streams from Which Water Supplies of Cities are Drawn* to advocate for a law to protect the water supplies of our nation's cities and towns.

With increased awareness, a number of laws were passed related to hygiene and water. The first law intended to regulate was the federal Interstate Quarantine Act of 1893. The intent of this law, supported by the AWWA, was to prevent the spread of water-borne disease by prohibiting the use of common (shared) sups on boats and trains. Enforced by the United States Public Health Service, it applied only to water systems providing water to interstate travel (trains and ships). However, subsequent laws were directed at the water itself (Hoffbuhr 2006).

By 1893, the AWWA was also encouraging state health departments to develop and execute a comprehensive set of laws to govern the quality of public water supplies in their states (Bass 1893:832). Efforts also focused on a number of other fronts, ranging from finding clean source supplies, the development of filtration and treatment systems, to the development of sewer systems to dispose of, and later treat, waste. Part of this effort included the development of storage structures to store clean water until needed.

In the late nineteenth century, construction of municipal water works in the United States boomed as cities and towns across the nation sought to supply burgeoning industries and growing populations with water (Table 1). By the time the first statistical analysis of water works in the United States was undertaken in 1880, 703 places in the United States and Canada had water works in operation or under construction (Croes 1885:2). By the end of 1882, this number had grown to 793, of which 746 were in the United States (Croes 1883). The number increased to 989 at the end of 1884, and by the end of 1886, there were 1,391 water works in the United States and Canada (Baker 1889:1). In 1890, M. N. Baker reported that there were a total of 2,047 water works in operation or projected for construction in the United States and Canada, of which the vast majority, 1,960 were located in the United States (Baker 1890). In six short years, this number had grown to nearly 3,350 by the end of 1896 (Baker 1897:E). Of these 3,350 systems, 2,780 (roughly 83 percent), were built after 1880, of which some 1,400, nearly 42 percent, were built in the six short years spanning 1891-1896 (Baker 1897:E). Over the next few decades,

TABLE 1. GROWTH IN THE NUMBER OF WATER WORKS IN THE UNITED STATES SINCE 1800[1]

Year	Public	Private	Total
1800	1	16	17
1810	5	21	26
1820	5	25	30
1830	9	35	44
1840	23	41	64
1850	33	50	83
1860	57	79	136
1870	116	127	243
1880	293	305	598
1890	806	1,072	1,878
1896	1,690	1,489	3,196[1]
1924[1]	6,900	2.950	9,850[1]

water works continued to be built at a rapid rate throughout the country and by 1924, there were 9,850 water works in the United States.

2.2 THE HISTORY OF WATER TOWERS ASSOCIATED WITH WATER SYSTEMS IN SOUTH DAKOTA

The following sections provide an overview of the developmental history of water works, and steel water towers associated with water systems in South Dakota. While Table 2 provides a snapshot of the growth in the number of water works and water systems in the state, the developmental history of steel water towers associated with these systems can be divided into four themes and periods. The first period covers the initial settlement of South Dakota up through the start of the twentieth century. The second period corresponds with the advent of all-steel water towers in the state and early regulations of water systems. The theme of the third period is Federal relief construction and spans the years 1933-1941. The fourth period focuses on increased regulation, new forms, and the post World War II boom.

TABLE 2. GROWTH IN THE NUMBER OF WATER WORKS IN SOUTH DAKOTA SINCE 1880[1]

Year	Total
1880	1
1882	2[1]
1884	5[1]
1890	24[1]
1896	38[1]
1922	133[1]
1938	195
1959	245
2011	694[1]

2.2.1 Geographical Background

As has been previously discussed, steel water towers associated with drinking water systems can be found across the entire state of South Dakota. Geography and population concentration were the two principal factors that play into the geographic dispersion of water towers constructed prior to 1967.

Prior to the development of rural water systems in the state beginning in 1967, most water towers built for drinking water purposes were located in communities with at least 100 or more residents. Therefore, the frequency with which water towers exist in South Dakota closely corresponds with population distribution across the state with some exceptions due to specific geographic circumstances. Approximately two-thirds of the existing water towers in South Dakota are located in the eastern half of the state with the greatest concentration located in the southeast region. Water towers are far less common in the Black Hills and the northwest corner of the state where populations are lower, or where geography provides options for using alternative means for storing drinking water.

2.2.2 Early Water Systems, 1879-1903

The rapid growth of urban populations and industries during the Industrial Revolution, and the corresponding increase in the demand for water, were the primary reasons why water works started to be developed in the United States in the mid-nineteenth century. However, there were somewhat different reasons why so many water works and water towers were constructed in a sparsely populated and largely agricultural state like South Dakota.

One of the challenges to the survival and prosperity of towns across South Dakota in the late nineteenth century was the lack of a reliable water supply. The average annual precipitation in South Dakota is 19 inches. However, it varies from 15 inches in the western part of the state to 26 inches in the eastern part, with extreme variations from year to year. As a result, few towns in the state had a reliable surface water supply (Mathews 1942). Even communities where there were plentiful surface water supplies, such as those along the Missouri River, were susceptible to potable water shortages during droughts due to the poor quality of the river water.

While surface water could be scarce, South Dakota is blessed with a thick, water-bearing layer of Dakota sandstone that underlies most of the state. This formation, which varies from 20 to 300 feet in thickness, outcrops in the Black Hills and slowly dips as it moves eastward across the state. An impervious stratum of shale covers this formation, blocking water from percolating upward and creating great hydrological pressure (Mathews 1942). This aquifer became the source for most water systems in the state. In addition to the need for a reliable source supply for drinking water, another important reason why many water systems were built in South Dakota was fire protection (see further discussion below).

Given its relative late settlement period and small population compared to many other states, South Dakota was behind more established states in its development of waterworks through the end of the nineteenth century. The first waterworks in the state was constructed in Deadwood in 1879. The system, designed by an engineer named R. D. Millet, was built and operated by the Black Hills Water & Canal Company under a 20-year franchise from the town (Baker 1888:455; Baker 1897:483-484). The system utilized White Wood Creek as its source supply, which gravity fed two wood tanks via a two-mile long conduit with a drop of 180 feet. The conduit was comprised of 1½-inch lumber laid two feet underground. The storage tanks were built on the ground, on a high spot in town, which provided 80 pounds of pressure in the system. The tanks were 20 feet wide by 50 feet long and 10 feet deep, with a combined capacity of 150,000 gallons. The tanks had 16-inch timber framing, with uprights spaced two feet apart and framed into sills and caps. The frames were lined with 4-inch planks. By 1887, the system included 4 miles of mains, 17 hydrants, and 160 taps, with a consumption rate of about 70,000 gallons per day (Baker 1888:455).

FIGURE 2. FIRST WATER TOWER IN VERMILLION (Courtesy Clay County Historical Society)

Three years later, at the end of 1882, Deadwood and Yankton were the only towns in the future state of South Dakota to have a water works (Croes 1883). Yankton first developed a pump, settle, and skim system that relied on the Missouri River as its source. The water from

this system was of poor quality and deemed unpleasant, so the town dug an artesian well in 1881, however the well was not brought under control until December 1883 (Karolevitz 1972:96-98).

As water works construction accelerated in the United States during the last two decades of the nineteenth century, many more systems were built in towns throughout South Dakota. By 1884, five water works were in operation or under construction in South Dakota (Table 3).

TABLE 3. WATER WORKS IN SOUTH DAKOTA AT THE END OF 1884[1]

No. in Statistics	No. in History	Town	Population in 1880	Water Works Date of Const.	Owner	Source Supply
525		Deadwood	3,777	1879[2]	Company	Creek
558	681	Yankton	3,431	1884	City	Artesian Well
697	773	Sioux Falls	2,164	1884	Company	Well
843	667	Chamberlain	1,200	1884	City	Missouri River
941		Huron	164	1884	City	James River

By 1890, 24 towns and cities in South Dakota had water works that were completed or under construction, and 12 additional communities had water works that were projected with a fair chance of being constructed (Baker 1890:539-546). As the example in Deadwood highlights, private companies under a franchise from the town or city often built many of these early water systems. However, by the first decades of the twentieth century the municipalities were building most new systems.

Of the communities with water works in operation or under construction in 1890, many had had no storage capacity. Of those that have storage capabilities, most had reservoirs, a few had standpipes, and several had tanks. Among the communities with tanks, Deadwood had wood tanks built on the ground; Scotland had a tank, but no information was provided on its type; Salem had a 60,000 gallon tank, but no further data was provided on it; Spearfish had a tank 90 ft. above the city (it is unknown if this was on a hill or a manmade support structure; and Yankton had two elevated wood tanks with a combined capacity of 62,000 gallons (Baker 1890:539-546).

At the end of 1896, 38 cities and towns in South Dakota had water works (Table 4). Of these, 20 (roughly 53 percent) had some type of storage facility. Of these 20 communities, five had reservoirs, three had standpipes, nine had tanks, and three did not provide data on the type of their storage system. Most of the communities that relied on tanks had water towers.

[1] Croes 1885.

[2] Baker 1897.

TABLE 4. WATER WORKS IN SOUTH DAKOTA AT THE END OF 1896[3]

Town	Date of Const.	Storage	Storage Type	Notes
Deadwood	1879, rebuilt 1889	Yes	Tanks	Multiple tanks, 250,000 gal. total, wood, on ground
Chamberlain	1884	No		Built for fire protection
Huron	1884	No		
Sioux Falls	1884	No		
Yankton	1884	Yes	Tanks	Two tanks, 180,000 gal. cap. (two 90,000 gal. tanks, wood)
Aberdeen	1885	No		
Pierre	1885	Yes	Reservoir	
Rapid City	1885-86	Yes	Reservoir	
Columbia	1886	No		Built for fire protection
Milbank	1886	Yes	No Data	Built for fire protection by the C.M.&St.P. Ry. From creek to 120 impounding reservoir to 12,000 gal. R.R. tank
Miller	1886	No		
Redfield	1886	No		
Mitchell	1887	Yes	Reservoir	
Spearfish	1887	Yes	Tank	90 ft. above city
Salem	1887-88, 1894	Yes	Tank	Original tank built in 1887-88 failed and was replaced in 1894 by a 16 ft. x 24 ft., 60,000 gal. wood tank on 25 ft. tower
Andover	1888	No		
Watertown	1888	Yes	Standpipe	
Plankinton	1888-89	No		
Doland	1889	No		Built for fire protection
Scotland	1889	No		Built for fire protection and watering stock
Tyndall	1889	No		
Woonsocket	1889	No		
Brookings	1889-90	Yes	Tank	62,000 gal., wood
Mellette	1889-90	No		
Faulkton	1890	No		
Vermillion	1890	Yes	Tank	50,000 gal., 100 ft. high
Whitewood	1890	Yes	Tanks	Two tanks, 100,000 gal. cap. (two 50,000 gal. tanks)
Hot Springs	1892	Yes	Reservoir	
Kimball	Pre-1893	No		
Sturgis	1893	Yes	Reservoirs	
Centerville	1894	Yes	Standpipe	
Dell Rapids	1894	Yes	Tank	63,000 gal., wood, 24 ft. x. 20 ft, on granite tower 50 ft high
Flandreau	1894	Yes	Tank	63,000 gal., steel, on 82 ft. tower
Madison	1894	Yes	Standpipe	
Belle Fourche	1895	Yes	Reservoir	
Ipswich	In place by 1896	No		
Eureka	1896	Yes	Tank	72,000 gal., wood on wood tower 70 ft. high,

[3] Baker 1897.

2.2.2.1 The Artesian Well Craze

Due to the lack of reliable surface water supplies and an ample aquifer underlying most of the state, many of the water works constructed in South Dakota in the late nineteenth and early twentieth century relied on artesian wells. In addition to providing a more reliable source supply than surface water supplies, water works that utilized artesian wells were cheaper to construct and operate than other types of systems because they relied on the hydrologic pressure from the well to pressurize the system. This eliminated the need for a pump or storage structure such as a water tower or standpipe to pressurize the system. Due to their lower costs, an artesian well craze soon spread across South Dakota in the late nineteenth century. However, one major drawback of these systems was that they typically had no storage capacity to accommodate fluctuations in demand, so systems often ran out of pressure and water during periods of peak demand.

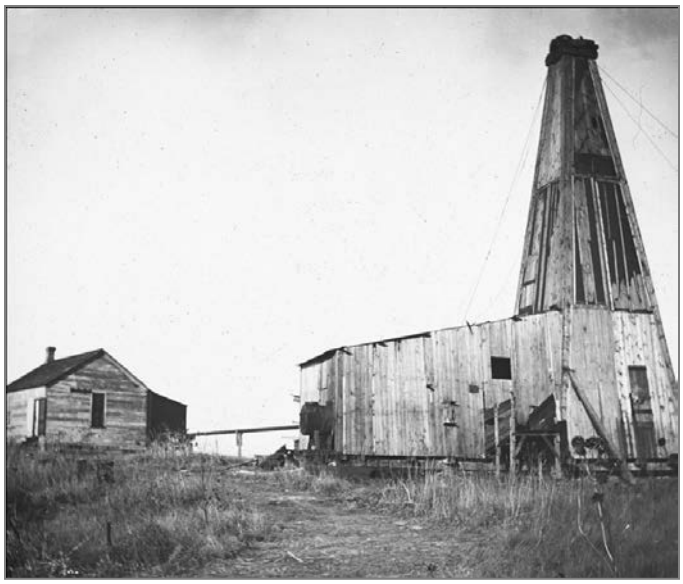

FIGURE 3. ARTESIAN WELL (Courtesy State Archives of the South Dakota State Historical Society)

One of the first towns in South Dakota to develop a water works that relied on artesian wells was Yankton. When Yankton was named capital of Dakota Territory in 1878, its population boomed and a rudimentary water system was developed. This system relied on a pump, settle, and skim process whereby water was pumped from the Missouri River into a settlement basin where impurities both settled to the bottom and were skimmed off the surface. Poor water quality combined with growing concerns about fires as wood buildings continued to spring up across the community led Yankton to dig its first artesian well in 1881. The well was finally brought under control in 1883 and a reservoir, along with a series of pipes and ditches, were dug to provide water to the city. This system was tested on December 22, 1883, and went into operation shortly thereafter (Karolevitz 1972).

Despite the initial perceived benefits of artesian wells, this fad was relatively short-lived due to their many pitfalls. One problem was the amount of time it could take to bring a well under control, which in Yankton's case, took two years. Madison is an example of another community that encountered problems when it attempted to develop an artesian well. In 1889, the city council allocated $10,000 for developing an artesian well and drilling began in June 1890. However, after four years of drilling in multiple locations, the city was still not able to identify an adequate supply, so in October 1893, the city held a special election where residents approved $25,000 to develop a more traditional water system that relied on a pump and standpipe (Nighters 2007).

Another common problem with artesian wells was poor water quality. The water from artesian wells was high in mineral content, including high levels of iron and magnesium, was very hard, and often contained objectionable amounts of hydrogen sulfide gas (Matthews 1942). In addition, the water tended to be extremely corrosive, quickly damaging steel castings, which required costly repairs (Mathews 1942).

FIGURE 4. WATER TOWER UNDER CONSTRUCTION IN RAPID CITY (Courtesy State Archives of the South Dakota State Historical Society)

Unfortunately, for many towns in South Dakota the biggest shortcoming of water systems that relied on artesian wells did not become apparent until there was a fire. Since water works that relied on artesian wells typically did not have any storage capacity, they could not provide the vast amounts of water required for firefighting. Therefore, many towns with artesian wells experienced devastating fires, or faced increasingly exorbitant insurance rates, due to inadequate supplies. Faced with increasing insurance rates, most towns started to develop more reliable water systems that included a storage structure, thus spelling the end for the artesian well period while securing the future for steel water towers in the state.

2.2.3 The Rise of the Steel Water Tower, 1894-1936

During this period, the number of water systems in South Dakota grew at a rapid rate. From a total of 38 cities and towns that had water works in 1896, the number nearly tripled over the next quarter century. As of June 30, 1922, in South Dakota there were 102 cities and towns with populations over 400 that had public water supplies (Table 5). Of these, 88 relied solely on ground water from springs, wells, or artesian wells; 11 utilized surface water supplies from rivers, streams, and lakes; and 3 relied on a combination of ground water and surface water for their supply. Only four towns that relied on ground water, Brookings, Kadoka, Phillip, and Sioux Falls, treated their water. Of those that relied on surface water, six utilized settling, filtering, or chlorination to treat their water. During 1920-1922 bienniums, the State Board of Health sampled and analyzed the water supply in 30 towns to determine from a sanitary standpoint if the water was satisfactory for domestic use. Of the 30 systems tested, only 20, or two-thirds had satisfactory water. Of the 10 deemed to have unsatisfactory water, seven were taking steps to make improvements, through either new supplies or treatment. However, this highlighted the need for increased oversight of water works in the state (South Dakota State Board of Health 1922:45-50).

FIGURE 5. WATER TOWER UNDER CONSTRUCTION IN RAPID CITY (Courtesy State Archives of the South Dakota State Historical Society)

TABLE 5. TOWNS WITH POPULATIONS OF 400 OR MORE WITH PUBLIC WATER SUPPLIES IN SOUTH DAKOTA AS OF JUNE 1922[4]

Town	Source Supply	Source	Treatment
Aberdeen	Ground Water	Artesian Wells	
Alexandria	Ground Water	Wells	
Alpena	Ground Water	Wells	
Andover	Ground Water	Artesian Well	
Ardmore	Ground Water	No Data	
	Surface Water	Lake	
Arlington	Ground Water	No Data	
Armour	Ground Water	2 Wells	
Artesian	Ground Water	17 Artesian Wells	
Ashton	Ground Water	No Data	
Belle Fourche	Ground Water	No Data	
Bowdle	Ground Water	Wells	
Bristol	Ground Water	2 Wells	
Britton	Ground Water	Artesian Well	
Brookings	Ground Water	2 Wells	Chlorination
Canova	Ground Water	2 Wells	
Canton	Ground Water	2 Wells	
Carthage	Ground Water	Artesian Well	
Centerville	Ground Water	2 Wells	
Chamberlain	Surface Water	Missouri River	Plain sedimentation
Clark	Ground Water	Well	
Clear Lake	Ground Water	2 Wells	
Colman	Ground Water	Well	
Colton	Ground Water	Well	
Conde	Ground Water	2 Wells	
Corsica	Ground Water	Well	
Cresbard	Ground Water	Well	
Deadwood	Ground Water	No Data	
	Surface Water	Spearfish Creek Springs	
Dell Rapids	Ground Water	4 Wells	
DeSmet	Ground Water	Well	
Doland	Ground Water	Artesian Well	
Dupree	Ground Water	Artesian Well	
Edgemont	Ground Water	Artesian Well	
Elk Point	Ground Water	Well	
Elkton	Ground Water	2 Wells	
Emery	Ground Water	2 Wells	
Eureka	Ground Water	Artesian Well	
Fairburn	Ground Water	Wells	
Fairfax	Ground Water	Springs	
Faulkton	Ground Water	Artesian Wells	
Flandreau	Surface Water	Sioux River	
Fort Pierre	Surface Water	Missouri River	
Frankfort	Ground Water	Artesian Wells	
Gary	Ground Water	Well	
Gettysburg	Ground Water	Deep Wells	
Gregory	Ground Water	8 Wells	

[4] South Dakota State Board of Health 1922.

Town	Source Supply	Source	Treatment
Groton	Ground Water	Artesian Wells	
Hecla	Ground Water	Artesian Wells	
Herreid	Ground Water	Wells	
Herrick	Ground Water	Wells	
Highmore	Ground Water	2 Wells	
Hitchcock	Ground Water	2 Wells	
Hosmer	Ground Water	Well	
Hot Springs	Ground Water	Springs	
Howard	Ground Water	Well	
Hudson	Ground Water	Well	
Hurley	Ground Water	Well	
Huron	Surface Water	James River	Settled, filtered & chlorinated
Ipswich	Ground Water	2 Wells	
Irene	Ground Water	Well	
Iroquois	Ground Water	2 Artesian Wells	
Isabel	Ground Water	Well	
Kadoka	Ground Water	Well	Chlorination (proposed)
Kimball	Ground Water	Artesian Well	
Lake Andes	Ground Water	Well	
Lake Norden	Ground Water	No Data	
Lake Preston	Ground Water	2 Wells	
Langford	Ground Water	Artesian Well	
Lead	Ground Water	Springs	
	Surface Water	Spearfish Creek	
Lemmon	Ground Water	Well	
Lesterville	Ground Water	Well	
McIntosh	Ground Water	2 Wells	
McLaughlin	Ground Water	2 Wells	
Madison	Ground Water	2 Wells	
Marion	Ground Water	Wells	
Menno	Ground Water	Wells	
Milbank	Surface Water	Impounded	Settled, filtered & chlorinated
Miller	Ground Water	3 Artesian Wells	
Mitchell	Ground Water	5 Wells	
Mobridge	Surface Water	Missouri River	Settled, filtered & chlorinated
Mt. Vernon	Ground Water	Wells	
Murdo	Surface Water	Impounded	Chlorinated
Newell	Surface Water	Belle Fourche River	Settled, filtered & chlorinated
Onida	Ground Water	Artesian Well	
Parker	Ground Water	3 Wells	
Parkston	Ground Water	Wells	
Phillip	Ground Water	Wells	Chlorination (proposed)
Pierpont	Ground Water	Artesian Well	
Pierre	Ground Water	Well	
Plankinton	Ground Water	2 Wells	
Platte	Ground Water	2 Wells	
Pollock	Ground Water	2 Wells	
Presho	Ground Water	2 Wells	
Rapid City	Ground Water	No Data	
	Surface Water	Rapid Creek Underflow	
Redfield	Ground Water	2 Artesian Wells	
St. Lawrence	Ground Water	Artesian Wells	
Salem	Ground Water	2 Wells	
Scotland	Ground Water	Wells	

Town	Source Supply	Source	Treatment
Selby	Ground Water	Well	
Sioux Falls	Ground Water	2 Wells	Softening, iron removal & chlorination
Sisseton	Ground Water	Springs	
Spearfish	Ground Water	Springs	
Spencer	Ground Water	Wells	
Springfield	Ground Water	Artesian Well	
Stickney	Ground Water	Well	
Stratford	Ground Water	Artesian	
Summit	Ground Water	2 Wells	
Tabor	Ground Water	Well	
Timber Lake	Ground Water	Well	
Tripp	Ground Water	Well	
Tulare	Ground Water	Artesian Well	
Tyndall	Ground Water	Well	
Vermillion	Ground Water	2 Wells	
Viborg	Ground Water	Wells	
Wagner	Ground Water	Wells	
Wakonda	Ground Water	Well	
Watertown	Surface Water	Lake Kempeska	Chlorination
Waubay	Ground Water	Well	
Webster	Ground Water	Well	
Wessington	Ground Water	Well	
White Lake	Ground Water	2 Wells	
White River	Surface Water	White River	
White Rock	Ground Water	2 Wells	
Whitewood	Ground Water	Springs	
Wilmot	Ground Water	Well	
Winner	Ground Water	17 Wells	
Wosley	Ground Water	Artesian Wells	
Woonsocket	Ground Water	Wells	
Yankton	Ground Water	Artesian Well	

Despite the recession that overshadowed South Dakota for most of the 1920s, the number of cities and towns with water systems continued to grow, although at a slower rate than previous decades. However, as the nation entered the Great Depression the construction of new water systems essentially ground to a halt since most communities could not find financing, nor did they have sufficient funds to develop a water system.

2.2.3.1 Fire Protection

One of the most important impetuses for the development of water systems in South Dakota was fire protection. Fire was a very real and constant threat. Many of the water systems and water towers constructed in South Dakota during the late nineteenth through the first decades of the twentieth century were built primarily to provide fire protection, with drinking water seen as secondary in importance. It was only after the state became prosperous in the early twentieth century during the Second Dakota Boom (1902-1915) that communities sought to improve living standards by improving the drinking water supply.

A number of water systems in South Dakota were originally constructed to provide fire protection. Unfortunately, many more cities and towns across the state learned this the hard way and only after they experienced a devastating fire. One example of a community that learned a hard lesson is Vermillion, where in 1890, a fire caused over $100,000 in damage. Another town that built a water works in response to a series of major fires was Dell Rapids. The first major fire in Dell Raids occurred in November 1882, when two elevators burned to the ground. A larger fire occurred on February 14, 1888, destroying an entire block of the town's commercial district. After a fire destroyed the office of the Dell Rapids Times a few years later, the editor of the paper rallied an effort that "encouraged" the town council to approve the construction of a water system. The council gave into this pressure and approved funds to develop a water works, including the town's first water tower, which was built in 1894 (MH00001382; NRHP 1984) (Nighbert 2005) (Figure 6). This same year, Flandreau erected the first all-steel water tower in South Dakota (non-extant). Several years later, on June 1, 1901, the Des Moines Bridge & Iron Works, later Pittsburgh-Des Moines Steel, completed a steel water tower in Sisseton, for a cost of $525 (Foster and Lundgren 1992:15).

FIGURE 6. DELL RAPIDS WATER TOWER
(Courtesy Siouxland Heritage Museums)

In their marketing materials water tower manufacturers appealed to both the emotional and economic sides of community leaders by extolling the many benefits of building a steel water tower. In its 1915 catalog, the Pittsburgh–Des Moines Steel Company touted the many advantages of municipal water works and water towers:

> In formative years, there were many small communities, which did not have the advantages of good light, abundant pure water; sanitary sewerage and telephone systems such as were installed in the larger cities. But this is an age when standards of living have advanced, and very few people are now content to forego the comforts enjoyed by their neighbors, and which they too can obtain at a reasonable cost. No one thing marks more clearly the departure of a village from obscurity to a position of prominence and wealth than the installation of the first and most vital public improvement–a water works. This step invariably marks the beginning of a more rapid growth in population and with it the addition of manufacturing plants, which means an increased and assured financial prosperity.

> In addition to these benefits, there is a very important financial inducement offered to every property owner by the new water works. As soon as an adequate fire protection system is in operation all insurance companies will make a very material reduction in their rates; in some cases this amounts to fully ninety percent of the old rate. The satisfaction which every citizen will feel in the knowledge that he is protected from a serious fire in either his home or place of business will well be worth the entire investment.
>
> The first essential of a water works system is an abundant supply of good water available at all times. It is seldom that such a supply can be procured at an elevation above the town site as to use it directly without installing machinery to pump and store it. The earliest water storage reservoirs were built of masonry in the ground. This construction was soon abandoned because it was difficult to find a suitable elevation in most towns to provide adequate pressure. Elevated reservoirs were then used of which the first were wooden tanks on wooden supports, followed shortly after by a change to steel supports and hemispherical bottom steel tanks. This construction has proved so satisfactory from considerations of cost, length of service and lack of maintenance expense that is it used in almost every new system installed (Pittsburgh-Des Moines Steel 1915:3).

There were very specific standards for water works that were used for fire protection purposes. The American Institute of Steel Construction, the National Board of Fire Underwriters, and the AWWA (W. E. Caldwell 1962:30) established these standards. For fire protection, elevated tanks were considered the most reliable source as the water was subject to and always responded to instant demand (Chicago Bridge & Iron Works 1929:1). In the late nineteenth and early twentieth century, insurance regulations tended to govern the size of an elevated storage tank for fire protection purposes (Chicago Bridge & Iron Works 1929:8). Typically, a tank with a capacity of 50,000 gallons was considered the minimum, but smaller tanks were deemed acceptable in some instances (Chicago Bridge & Iron Works 1929:8). For manufacturing facilities where insurers required sprinklers, insurers required two supply sources, of which one normally had to be an elevated tank (W. E. Caldwell Company 1908:18).

2.2.3.2 Regulation

In South Dakota, early legislation pertaining to water works and water safety followed two different tracks. The first law loosely related to water safety was enacted in March 1889, when the Legislature approved a law to create the State Board of Health and to authorize the establishment of county boards of health. However, the charge of these boards was: to establish regulations to prevent and cure disease and infections; establish quarantine of persons and to quarantine or kill diseased animals to control the spread of contagions; dispose of bodies and substances that may endanger the health of humans and animals; and to condemn and destroy contaminated food. In 1893-1894, the State Board of Health started to study artesian wells. Early efforts focused on completing topographical surveys and geological work to determine the extent to which the artesian well water was available for irrigation. However, at this early time the Board started to express concern about artesian

well water from a sanitary viewpoint as many towns in the state were allowing this water into their water mains for human consumption (South Dakota State Board of Health 1894:42).

On the fire protection front, in 1903 the South Dakota Legislature approved the first law related to the regulation of water works on March 14, 1903. This law, Article 4 of the 1903 Political Code of South Dakota, State Statute 1520, entitled *Waterworks and Fire Apparatus*, authorized and empowered all towns, cities, and municipal corporations in the South Dakota having a population of 350 or more, to "purchase, erect, construct, lease, rent, manage or maintain any system or part of a system of water works, water mains, hydrants and supply of water, telegraphing fire signals or fire apparatus that may be of use in the prevention of and extinguishment of fires…" (Moody, Tripp and Brown 1903:262). This provided many towns in the state with a mechanism for developing a water system, avoiding the need for public votes and referendums. This law also empowered cities and municipalities to enact ordinances to create such systems and to levy taxes to pay for their construction and ongoing operation. This law had a profound influence on the development of water systems in the state and is evidenced by the fact that the number of water works established in the state grew by 350 percent between 1896 and 1922.

A decade later, in 1913, the Legislature approved two laws that came to have a pronounced influence on the development of water systems in the state, but in very different ways. First, recognizing the increasing importance of water works to all incorporated settlements in the state, the Legislature approved Chapter 367. This chapter, entitled *Water Works*, amended State Statute 1520 of the 1903 Political Code to allow more towns, cities, and municipal corporations across the state to establish water works by reducing the number of inhabitants required in a community before a water works could be established from 350 down to 100 (State of South Dakota 1913:603-604). By doing this, the Legislature opened the door for many more small towns across the state to establish water systems.

The second law approved by the South Dakota Legislature in 1913 was Chapter 109, which created a state Board of Health and Medical Examiners. Among the duties of the board, comprised of five resident physicians in the state in good standing and appointed by the governor, was to exercise general supervision over:

> all health officers and boards, take cognizance of the interests of health and life among the people, investigate sanitary conditions, learn the cause and source of disease and epidemics, observe the effect upon human health of localities and employments, and gather and diffuse proper information upon all subjects to which its duties relate…(South Dakota 1913:89).

It was this law that would eventually lead to State oversight of construction and operation of water works in South Dakota over coming decades. The following year the United States Public Health Service adopted the first microbial standards for drinking water to implement the Interstate Quarantine Act. The following year the United States Public Health Service adopted the first-ever microbial standards for drinking water to implement the Interstate Quarantine Act (Hoffbuhr 2006). These standards would serve as a standard that would later be used by many states to gauge water quality and safety.

On October 17, 1921, the Division of Sanitary Engineering of the State Board of Health was created. A few months later, on February 1, 1922, a law went into effect giving the State Board of Health jurisdiction over approving and inspecting water & sewer systems in South

Dakota. As a result, the Division of Sanitary Engineering would oversee the development of water works in South Dakota for decades to come. Much of the Division of Sanitary Engineering was focused on testing water and reviewing and approving plans for water works.

During the 1930s, the State Board of Health was focused on controlling the spread of diseases that were transmitted by insanitary "sewage and waste disposal, domestic water supplies, domestic milk supplies, and other items which may become vectors for the spread of the so-called filth borne diseases" (South Dakota State Board of Health 1940:78). Initiatives were directed at both urban and rural areas. In order to better understand the state of South Dakota's water systems, the Division of Sanitary Engineering conducted a survey in 1930, which found that more than 60 percent of the city water systems in the state were subject to pollution (South Dakota State Board of Health 1940:78). To address this serious issue, beginning in June 1932, the Division of Sanitary Engineering embarked on a multi-year effort to survey every public water supply in the state to collect data for determining the adequacy of water supplies in regards to the safety of the water for human consumption (South Dakota State Board of Health 1932: 36-38). Related to what later turned out to be rather dismal results, a number of events transpired in the mid-1930s that led to increased oversight and regulation of water and water systems. In February 1934, Governor Terry Berry appointed a temporary State Planning Board to establish planning agencies, which would later influence the development of water systems in communities and in 1935; the South Dakota Legislature approved the State's first water pollution law. Also in 1935, the Division of Sanitary Engineering embarked on several initiatives to improve the safety of municipal water supplies. Efforts included the establishment of an organization of water and sewer works operators to improve training and share knowledge, and the introduction of a monthly publication by the Division that was sent to operators to instruct them on proper operation and maintenance. The Division started offering an annual two-day meeting that offered a course of instruction in water and sewer practices. The South Dakota Water and Wastewater Association was established as part of this effort (South Dakota State Board of Health 1936).

Another key event occurred in 1936, when the Division of Sanitary Engineering developed standards for both rural and municipal water and sewer systems. Prior to this time the activities of the Division of Sanitary Engineering in regards to water supplies were limited to checking plans for new construction and making investigations as requested by municipalities. The new standards proposed to increase activities of the Division and included the completion of a sanitary survey (testing) of all public water supplies in the state. Pursuant to initiatives it outlined the previous year, the Division continued to place an emphasis on instructing municipalities since most that had treatment plants were operated by laymen who did not understand how to properly operate and maintain their systems (South Dakota State Board of Health 1936:182).

The many efforts of the Division of Sanitary Engineering led to not only better water systems designs, but also improved operation and maintenance, all in an attempt to improve water quality and safety for the public.

2.2.4 Federal Relief Construction, 1933-1941

The crash of the New York Stock Exchange on October 29, 1929, thrust the Unites States into a decade long depression from which the county did not recover until World War II. In South Dakota, a depression began much earlier. After World War I, farm prices fell and land values declined by 58 percent between 1920 and 1930. During this period, more than 23,000 farms in the state went through foreclosure. Correspondingly, the state experienced a major banking crisis. By 1925, 175 banks had failed, and by 1934, 71 percent of the banks in South Dakota had closed (Schell, 1961:283). South Dakota would remain in the throes of the Great Depression until World War II.

In the first years of the Great Depression, relief programs developed by President Herbert Hoover's administration, such as the Reconstruction Finance Corporation, were largely unsuccessful in their effort to stimulate the economy. Immediately after Franklin D. Roosevelt took office on March 4, 1933, he established a new course and swiftly moved forward with implementing his first New Deal plan to jumpstart the nation. The "3 Rs" plan focused on *"Relief"* for the unemployed, *"Recovery"* of the economy to return it to normal levels, and *"reform"* of the financial system to prevent another similar depression. The goal of this first New Deal was to provide relief to as many people as possible, both directly and through work relief. Within his first hundred days in office, President Roosevelt set into motion more administrative action and initiated more legislation than any similar period in history (Dennis 1998a:7).

The first action by the Roosevelt Administration was the passage of the Emergency Banking Act on March 9, 1933, to place a sound footing under the nation's financial system. Over the next few months the Agricultural Adjustment Act and National Industrial Recovery Act were approved, and the Civilian Conservation Corps (CCC), Federal Emergency Relief Administration and the Public Works Administration (PWA) were established (Dennis 1998a:7-8).

As the Depression prolonged, between 1934 and 1936, President Roosevelt instituted a second "New Deal" that sought to provide more relief and to improve conditions for workers, the elderly, and the poor. Legislation approved as part of this second "New Deal" included the National Labor Relations Act, the Fair Labor Standards Act, and the Social Security Act. The United States Housing Authority and the Farm Security Administration were also created. Agencies and programs established to provide relief that had construction components included the Civilian Works Administration (CWA), the National Youth Administration (NYA), and the Works Progress Administration (WPA) (Dennis 1998a:8).

The significance of federal relief construction in South Dakota during the period 1929-1941 is well documented in two documents. The first document is a historic context entitled: *Federal Relief Construction in South Dakota, 1929-1941* that was prepared for the SHPO by Michelle L. Dennis in 1998. The second document is a National Register of Historic Places Multiple Property Documentation Form, entitled: *Federal Relief Construction in South Dakota, 1929-1941*, prepared by Michelle L. Dennis in 1998.

Many water works projects were built across South Dakota using funding from federal relief programs. Projects ranged from the construction of new water works, to additions and

extensions of existing systems, and upgrades to older facilities. These projects included water wells; storage facilities, including water towers, tanks, standpipes, and reservoirs; settling basins, filtration, iron removal, and softening plants; pumping stations; and water mains and distribution lines (Dennis 1998:66).

Of the myriad of New Deal programs that either financed or constructed civic improvement projects, only a few were responsible for the development of municipal water works, and specifically water towers. In South Dakota, the primary federal relief program responsible for water works projects was the PWA and, to a lesser degree, the WPA. However, both programs were different. The PWA received applications for construction projects (other than repair or maintenance) where the total cost was greater than $25,000 while construction projects costing less than $25,000 were considered for funding by the WPA. Another important difference between the two was that unlike the WPA, which was very concerned about the style of buildings it constructed, the PWA was only concerned with structural soundness so buildings and structures constructed under this program exhibit marked variation (Dennis 1998a:28-29). While the CCC was also involved with the development of at least one water system at Wind Cave National Park, this project was conducted with the cooperation of the WPA and, therefore, it was the WPA, and not the CCC, that is most associated with this particular water works project (Dennis 1998a:20). Since the CCC did not have a significant direct role in constructing water towers for drinking water systems in South Dakota, it is not discussed further here.

In the years leading up to this period few water works projects were constructed in South Dakota. However, with an inflow of funding from federal relief programs to improve public health activities beginning in February 1935, activity increased during the period 1933-1941 (South Dakota State Board of Health 1936:182). According to the Division of Sanitary Engineering it reviewed the approved construction of three projects in 1930, three in 1931, one in 1932, eight in 1933, six in 1934, seven in 1935, four in 1936, nine in 1937, nine in 1938, nine in 1939, and seven in 1940 (South Dakota State Board of Health 1940:80-81).

2.2.4.1 Public Works Administration

Congress passed the NRIA on June 16, 1933. Title II of this act created the PWA, and the PWA was continued until July 1, 1939. The purpose of the PWA was to stimulate economic recovery by providing employment for workers in the building trades and in industries supplying the construction industry. The program was placed under the direction of the Secretary of the Interior and was initially allocated $3.3 billion dollars for its activities. The PWA primarily provided assistance to public works projects in the form of grants, loans, or a combination of the two. The PWA paid the entire appropriation for federal projects. For projects proposed by states and their subdivisions, the PWA initially provided grants of up to 30 percent of the cost of materials and labor and would provide loans for the rest of the cost. The grant allocation was later increased to 45 percent in 1935. Non-public entities were also eligible for loans (Dennis 1998a:27-31).

During its existence, the PWA financed more than 34,500 projects across the nation at a cost of just over $6 billion. Within the first two years of the PWA in South Dakota, it allotted more than $6,000,000 for projects (Dennis 1998a:29). According to a report by the South Dakota State Planning Board on public works projects in the state, the following PWA

funded water works projects were under construction or completed by April 1935 (Table 6). The Planning Board also reported the following projects as approved and financed, but not yet under construction (Table 7).

TABLE 6. PWA PROJECTS COMPLETED OR UNDER CONSTRUCTION IN SOUTH DAKOTA BY APRIL 1935[1]

Town	Project Type	Expenditure
Aberdeen	Waterworks	$655,000
Alcester	Waterworks	$17,500
Beresford	Waterworks	$19,000
Brookings	Waterworks	$5,700
Buffalo Gap	Waterworks	$27,000
Clear Lake	Waterworks	$2,800
Frederick	Waterworks	$16,000
Gary	Water Tank	$1,300
Interior	Waterworks	$13,500
Martin	Waterworks	$37,000
Mitchell	Waterworks	$43,000
Oacoma	Water Improvements	$5,454
Spearfish	Waterworks	$64,280
Spencer	Waterworks	$29,000

Not every project that applied for a grant or loan was funded. There were also projects that were funded but never constructed (Dennis 1998a:33). Since state and federal records do not include data on which projects were completed and exactly what they entailed, further research is needed to determine if any of these projects included the construction of a water tower. While potentially incomplete, the following table provides data on known water works projects in South Dakota funded by the PWA. It also includes data on water towers in those communities that date from the period the PWA was in existence (Table 8). Further research is required to determine if these projects included water towers.

TABLE 7. PWA PROJECTS APPROVED AND FINANCED, BUT NOT YET UNDER CONSTRUCTION IN SOUTH DAKOTA BY APRIL 1935[1]

Town	Project Type	Expenditure
Deadwood	Waterworks	$15,455
Edgemont	Well	$41,000
Yankton	Waterworks	$16,364

TABLE 8. NON-FEDERAL WATER WORKS PROJECTS APPROVED FOR PWA FUNDING IN SOUTH DAKOTA WITH DATA WATER TOWERS (IF KNOWN), 1933-1938[5]

Location	Project	State Board of Health Notes on Type of Const. and Date Approved	Extant Water Tower Erected 1933 to 1941	
			Date	SHPO #
Aberdeen	Water Works	New Water Supply 12-29-1933 Water Supply Improvements 1933 Water Supply & Treatment Plant 1934	1934	BN00000722

[5] This list is taken from the Alphabetical Index to Non-Federal Projects, which was included in the final report of the Federal Emergency Administration of Public Works, Projects and Statistics Division, dated February 8, 1939. The records include all projects for which funding was approved; however, there is no record to indicate whether a project was actually completed. Duplicate listings indicate separately funded requests. The records do not provide much detail as to the nature of some projects, so it is unconfirmed whether the project included a water tower unless specifically noted.

Location	Project	State Board of Health Notes on Type of Const. and Date Approved	Extant Water Tower Erected 1933 to 1941	
			Date	SHPO #
Alcester	Water Works	Water Works and Storm Sewer System 11-4-1933		
Artesian	Water Works			
Belvidere	Water Tank			
Belvidere	Water Works			
Big Stone City	Water Works			
Brandt	Water Works			
Brookings	Water Works	New Well and Pump 1931 Pump House 1931 Iron Removal Plant 2-5-1934 Water Works Extensions 1939 Water Works Extensions 1940		
Buffalo Gap	Water Works	Well Specifications 10-9-1933 Water Supply System 10-9-1933 New Water Supply 1933		
Canton	Water Works	Water Works Improvements 9-13-1932		
Carthage	Water Works	Sewage Treatment Plant 10-9-1933		
Chamberlain	Water Works	Water Treatment Plant 7-11-1933		
Clear Lake	Water Works	Water Supply Improvement 10-25-1933 Water Storage (tower non-extant)		
Colome	Water Mains			
Deadwood	Water Works	Spring Improvements 1936-38 Spring Developments 1938		
Deerfield	Water Works Improvements			
Eagle Butte	Water Works			
Elk Point	Water Works		c. 1936	UN00000751
Fairburn	Power/Water Works			
Fall River County	Power/Water Works			
Frederick	Water Works	Water Supply Improvements 6-29-1934 New Well & Chlorinator 1934		
Gary	Water Tank	Water Supply Improvements 11-4-1933	1934 or 1939[6]	DE00000192
Gregory	Water Works			
Hermosa	Water Works			
Hetland	Water Works			
Howard	Water Works Improvements			
Huron	Water Works		1940	BE00000879
Huron	Water Works	Water Supply System 10-30-1934 Well Water Supply Development 1934 New Well 1939		
Interior	Water Works	Water Supply System 3-28-1935 New Water Supply 1935		
Java	Water Works	New Water Supply 1939		
Java	Water Works			

[6] Sources conflict.

Location	Project	State Board of Health Notes on Type of Const. and Date Approved	Extant Water Tower Erected 1933 to 1941	
			Date	SHPO #
Jefferson	Filter Plant	Iron Removal Plant 1937		
Kennebec	Well			
Lake Andes	Water Works			
Lake Andes	Water Works			
Lennox	Water Works	Well, Pump & Pump House 1936-38 New Well & Chlorinator 1936		
Madison	Water Works		1935	LK00000237
Madison	Water Works			
Martin	Water Works	Water Supply System 7-15-1935 New Water Supply 1935	1935	BT00000557
McIntosh	Well	New Well & Pump 1938		
Mitchell	Water Works			
Morristown	Water Works			
Nisland	Water Works	New Well & Pump 1938	c. 1935	BU00000238
Oacoma	Water Works Improvements			
Oelrichs	Water Works		1933 or c. 1939[7]	FA00000153
Oelrichs	Water Works	Water Supply System 9-27-1933		
Oelrichs	Water Works Improvements	New Water Supply 1938		
Parker	Water Works	Iron Removal Plant 10-5-1933		
Parker	Water Works	Iron Removal Plant 7-15-1935[8]		
Parker	Water Works Improvements	Water Works Improvements 1938		
Pennington County	Water Works			
Phillip	Water Works	Deep Well 1930		
Plankinton	Water Works Heat			
Plankinton	Water Works/Sewer			
Platte	Water Works			
Rapid City	Water Works	Wells 1936-38	1932[9]	FN00008010
Rapid City	Water Works	Water Supply Reservoir & Distribution System 1936-38 New Wells 1936 Water Works Improvements 1937		
Rapid City	Water Works	Reservoir Improvements 1939		
Reliance	Water Works			
Sioux Falls	Filtration Plant	Sewage Treatment Plant 11-28-1932		
Sisseton	Water Works	Iron Removal Plant 1936-38 Iron Removal Plant & Spring Development 1937		
Spearfish	Water Mains			
Spearfish	Water Works			

[7] Records conflict.

[8] Only appears in 1935 consolidated list.

[9] Sioux San Hospital Water Tower.

Location	Project	State Board of Health Notes on Type of Const. and Date Approved	Extant Water Tower Erected 1933 to 1941	
			Date	SHPO #
Spencer	Water Works	Well Specifications 10-9-1933 Water Supply System 10-9-1933 Water Supply System 3-28-1935 New Water Supply 1935		
Tydall	Water Works Improvements	Water Works Improvements 1940		
Valley Springs	Water Works			
Vermillion	Water Works	Well and Water System Extensions 2-19-1934		
Vermillion	Water Works	Auxiliary Pipe Line 1940		
Wagner	Water Works/Sewer	Sewer & Water Improvements 10-25-1933		
Wakonda	Water Works			
White River	Water Works			
White River	Water Works			
Whitewood	Water Works	Water Supply Reservoir 1936-38 Concrete Reservoir 1938		
Willow Lake	Water Works			
Winner	Water Tank			
Winner	Water Works			
Yankton	Water Works/Sewer			
Yankton	Water Works			
Yankton	Water Works Improvements			
Yankton	Water Works Improvements			

2.2.4.1 Works Progress Administration

The WPA is perhaps the best-known federal relief program. The Works Progress Administration was created by Executive Order on May 6, 1935, and it was renamed the Works Projects Administration in 1939. Engineering and construction projects represented the largest amount of WPA employment. Through the spring of 1940, these types of activities generated nearly 75 percent of the jobs created by the WPA (United States Federal Works Agency 1947:47). While nearly half the jobs created by the Engineering and Construction Division of the WPA were related to highway, road, and street projects, another third were related to three types of projects. These included water and sewer systems and other public utility projects, projects for parks and other recreational facilities (excluding buildings), and projects for public buildings (United States Federal Works Agency 1947:132). In its final report on the WPA, the United States Federal Works Agency noted that municipal engineering projects, including the construction of sewerage systems and water and sewage-treatment plants were the "backbone of the winter work program" (United States Federal Works Agency 1947:50). Therefore, WPA water system projects resulted in the employment of a sizable number of Americans during the existence of the program.

In South Dakota, the WPA did not start to employ workers until the fourth quarter of 1935. At its peak employment in the state in the third quarter of 1936, the WPA employed on average 49,469 per week. This number quickly declined and on average, in most quarters of

its existence the WPA employed on average between 9,000 and 16,000 workers per week (United States Federal Works Agency 1947:110-112).

In terms of water system projects on national level, during the eight-year existence of the WPA:

> WPA workers constructed or improved nearly 500 water-treatment plants, built or improved about 1,800 pumping stations, installed or repaired more than 19,700 miles of water mains and distribution lines, and made more than 880,000 consumer connections. In the improvement of the water supply of rural and urban communities, WPA workers dug nearly 4,000 water wells, made improvements to about 2,000, and built or improved 3,700 storage tanks and reservoirs. Through projects of this type, water was piped to areas previously dependent upon private wells and cisterns, purified water was provided for other communities where it had been lacking, and the water supply was increased in outlying urban areas in which there was a great influx of war workers (United States Federal Works Agency 1947:51).

Through the conclusion of the WPA on June 30, 1943, the WPA had been involved with the construction of 3,026 water storage facilities, including tanks, tower and reservoirs, and the reconstruction or improvement of another 738 (United States Federal Works Agency 1947:132). However, the exact number of each type of storage structure built or improved is unknown. In South Dakota, the WPA constructed 61 utility plants (which included water supply systems) and laid 138 miles of new water mains and distribution lines (United States Federal Works Agency 1947:136). The final report only provides summary data by state and does not specify if the WPA built any water towers in South Dakota. These two documents provide a historical overview of the Great Depression in South Dakota, federal relief programs and their impact on the state, and the role of the State Planning Board. They also identify the types of resources associated with this context and criteria and registration requirements for evaluating associated resources. Given the broad body of knowledge contained within these two works, it would be redundant to duplicate this effort by providing a comprehensive overview of federal relief programs in South Dakota here. Instead, the following section summarizes the role of specific federal relief programs that were responsible for completing water works projects in South Dakota. It also provides more detailed information on water works projects known to be associated with federal relief programs for use in identifying water towers associated with this theme. If a water tower is being evaluated within this context, it should also be compared against the registration requirements contained within the historic context and Multiple Property Documentation Form for Federal Relief construction in South Dakota.

2.2.5 Increased Regulation, New Forms, and the Post World War II Boom, 1936-1967

In the decades after World War II, South Dakota experienced a tremendous economic and population boom. Although many small towns in South Dakota experienced population losses, many larger towns grew at rates unseen since the nineteenth century. Correspondingly, the number of water systems in South Dakota increased. Many larger cities built a second, and sometimes even a third or fourth water tower to meet the needs of their growing populations. As of June 30, 1938, of the 300 incorporated municipalities in South

Dakota, 195 had public water supply systems (South Dakota State Board of Health 1938:76-78). Just over two decades later, in May 1959, there were 245 public water systems in the state, serving an estimated 392,000 South Dakotans.[10] This number continued to grow through the late twentieth century, especially with the advent of rural water systems in South Dakota in 1967. Forty-three years later, in 2003, there were 694 public water systems in South Dakota, including 469 community water systems, 30 non-transient non-community water systems, and 195 transient non-community water systems (South Dakota Department of Environmental and Natural Resources 2003).

During this period and in the decade following, a number of important laws were enacted to better regulate water quality and the development of water systems. At the Federal level, in 1948, Congress enacted the Federal Water Pollution Control Act of 1948, which provided for comprehensive planning, technical services, research, and financial assistance by the federal government to state and local governments for sanitary infrastructure. The Act was subsequently amended in 1965, to establish a uniform set of water quality standards and create the Federal Water Pollution Control Administration authorized to set standards where states failed to do so. Comprehensive Federal regulations for water supply and sanitation were introduced in the 1970s, in reaction to an increase in environmental concerns. In 1970, the Environmental Protection Agency (EPA) was created, and in 1972, Congress passed the Clean Water Act, which required industrial plants to proactively improve their waste procedures in order to limit the effect of contaminants on freshwater sources. In 1974, the Safe Drinking Water Act was enacted to regulate public water systems. This law specified a number of contaminants that must be closely monitored and required reporting to residents when a water system exceeded maximum allowed contaminant levels. From this point forward, drinking water systems have been closely monitored by federal, state, and municipal governments for safety and compliance with these regulations.

Corresponding with the creation of stricter federal laws for water and water systems, the Division of Sanitary Engineering of the State Board of Health was given increased authority over water systems. In the early part of World War II, the number of engineers employed by the State Board of Health's Division of Sanitary Engineering was reduced from seven to two or three as engineers were called up to serve the country. This resulted in the curtailing of instruction to water and sewer system operators and as a result, many water systems experienced significant amounts of material deterioration during the war (South Dakota State Board of Health 1946:81). As the country came out of the war, there was a significant uptick in water works improvements. During the period July 1, 1944 to June 30, 1946, the Division of Sanitary Engineering reviewed plans for 20 water system improvement projects (South Dakota State Board of Health 1946:81). During the following biennium, July 1, 1946 to June 30, 1948, the Division of Sanitary Engineering reviewed 55 water works improvement projects (South Dakota State Board of Health 1948:59). This pattern continued into the 1950s and during the July 1, 1954 to June 30, 1956 biennium, the Division of Sanitary Engineering reviewed a total of 60 water works projects, of which five,

---

[10] Letter from Donald C. Kalda, Chief, Water Pollution Control Section, Division of Sanitary Engineering, State Health Department, to the Water Resources Commission, dated June 12, 1959. The letter provided the contributions of the State Department of Health to the Annual Progress Report as required by Governor Herseth in his correspondence of May 15, 1959.

or roughly eight percent, were for new distribution systems and storage (South Dakota State Board of Health 1956:83).

Stylistically, in the decades after World War II South Dakota, like most parts of the nation, saw a transformation as new water tower types and styles were introduced to the state. However, South Dakota was slow to accept these new forms and styles. New water tower forms first appeared in the state usually a decade or more after they are invented.

2.3 EVOLUTION OF STEEL WATER TOWER DESIGN

2.3.1 Introduction

Most municipal water systems have four key components: a source of supply, a pipeline or aqueduct to carry the water from the source to the city or town, treatment and purification facilities, and a distribution network (Hayes 2005:75). Water towers are a very important component of the distribution network and serve two key purposes: they store water that is ready for consumption and they pressurize the system (Hayes 2005:85). This second function is especially important for smaller water systems since it eliminates the need for costly, continuously operating pumps that would otherwise be needed to pressurize the system. Another benefit of water towers over pumps is that since they operate on gravity, they remain functional during power outages, thus avoiding water shortages.

The need for dependable reserve supplies increased as cities grew and per capital consumption rates rose. As a result, water towers became an important component of water systems and industrial complexes in the late nineteenth century (Dubie 1980:1). In 1875, *Engineering News* observed that the field of community water supply had not received sufficient attention from the engineering profession and suggested that engineers grow their business by preparing water works plans free of charge during slow periods (Dubie 1980:7). Several professional organizations were soon established, such as the New England Water Works Association (1882) and the AWWA (1883), and universities began to incorporate water works curricula into their programs, all of which brought professionalism and scholarly study to the field. A number of trade journals, including *Engineering News*, *The Engineering Record*, and *The Manual of American Waterworks* regularly published articles on facilities under construction, products available, and contractors providing services (Dubie 1980:7). All of this resulted in a growing body of knowledge on how to design water works, including water towers.

The evolution of steel water tower design can generally be broken into several distinct phases. The first phase spans the period roughly between 1893 and 1905, and is characterized by engineers experimenting with variations of design features pioneered by Edward Flad, Coffin, and Johnson in the 1880s and early 1890s, and resulted in the development of the traditional style legged tower. The second phase covers the period 1907-1928. It begins with the invention of the ellipsoidal bottom in 1907 and includes the period in which efforts focused on increasing capacity and improving appearance. The third phase begins in 1928 and covers the period in which new water types and forms were developed. It was during this period that many new tank types and support structures were invented. It

also corresponds with other technological advances, such as the use of welding to construct water towers, which enabled the development of these new forms.

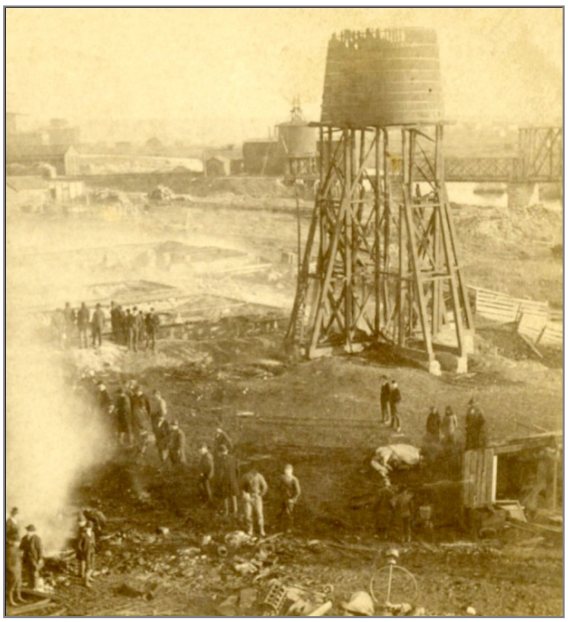

FIGURE 7. SIOUX FALLS WATER TOWER (Courtesy Siouxland Heritage Museums)

2.3.2 Early Elevated Water Storage Structures

The first elevated water storage structures in the United States were constructed as part of the Center Square water works in Philadelphia around 1800 and were in use from 1801 until 1815. The water works included two wood tanks that measured approximately 30 feet by 50 feet and 40 feet by 50 feet. Both were supported by timber beams and fed by steam-driven pumps. While most early water towers were of all-wood construction since wood was easy to obtain, a few were constructed of cast iron (Dubie 1980:11).

Most wood water towers rested on a heavy timber support structure or a masonry base (Figures 7 and 8). Wood tanks had flat bottoms and typically rested on a platform atop the support structure. If the tanks were square, they had horizontal boards supported on the outside by heavy timbers. More common, however, were cylindrical tanks with vertical wood staves held together by metal hoops or bands. If available, rot-resistant woods such as redwood and cypress were utilized for tank construction.

FIGURE 8. SOUTH DAKOTA STATE PENITENTIARY WATER TOWER, SIOUX FALLS (Courtesy Siouxland Heritage Museums)

2.3.3 The Development of All-Steel Water Towers, 1893-1905

The development of steel tanks and steel support structures followed somewhat different tracks, and engineers initially experimented with combinations of wood and metal for elevated storage structures.

As engineers began experimenting with the use of steel and iron for water towers, in the late 1880s, English engineers perfected the design for curved bottom tanks. The benefit of a curved bottom was that it used less steel and was more

water tight than flat bottom tanks (Dubie 1980:23). In the United States, engineers experimented with curved bottom tanks, first relying on masonry structures as support, but always with some type of central support under the tank. American engineers finally came up with designs for self-supporting steel bottom tanks in the early 1890s.

The development of steel-truss support structures for water towers was slow and is not well documented; however, the design for steel support structures came from several sources. Railroads were a leader through their efforts to develop low maintenance water towers to service their fleets of steam locomotives. Windmill manufacturers also played a role, having developed designs for simple, yet durable wood and steel trusses, some of which included tanks below the aerators. Advancements in bridge engineering, specifically in the designs for iron and steel bridge trusses also influenced the design of water tower support trusses. Correlations have also been drawn to lighthouse and range light designs (Dubie 1980:63). The first use of a metal trestle to support a water tower was in early 1880s. One early example was a water tower built in Pullman, Illinois in 1882. This structure had a wrought iron truss system that supported a wood (flat bottom) tank (Dubie 1980:27). Another excellent example was a water tower in Princeton, New Jersey. This tower had a 55 feet tall support structure comprised of three panels with latticed channel legs braced with tie rods. Atop it was an I-beam and timber support grid that supported a 120,000-gallon wood tank (Dubie 1980:74-75). In 1892, Jackson & Moss, predecessor of Pittsburgh-Des Moines, designed their first steel support structure, which was intended to support a flat deck for a wood tank (J&M Joist System, patented in 1896). Four years later, in 1896, Jackson and Moss patented the "J&M Joist System" (Figure 9). This system, an improvement on their original design, became quite popular and by 1905, it had been used on more than 85 water towers (Foster and Lundgren 1992:4, 38; Jackson and Moss 1896).

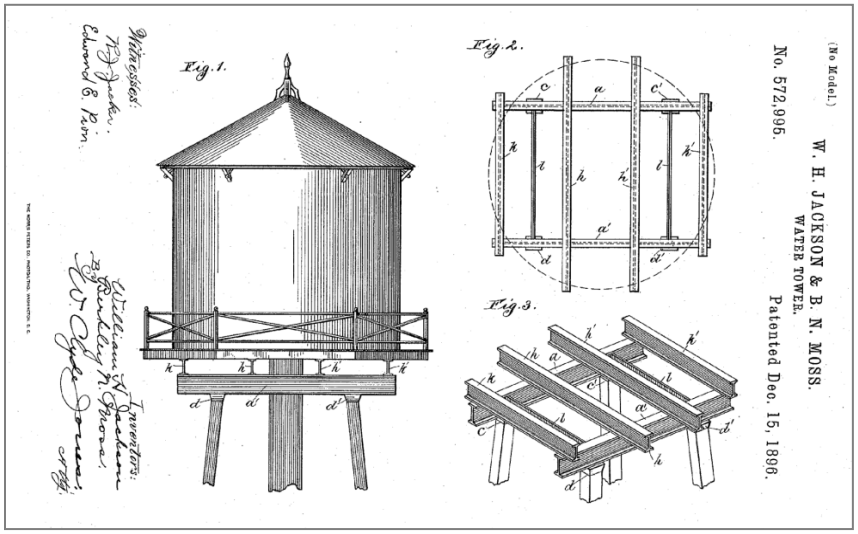

FIGURE 9. J&M JOINT SYSTEM, U. S. PATENT 572,995 (Courtesy United States Patent and Trademark Office)

Circa 1887, engineer Edward Flad of St. Louis designed the first all-steel elevated water tower in the United States. This tower had an inward-sloping, steel support structure and a steel tank with a cone-shaped bottom (Pittsburgh-Des Moines Steel Company 1992:37). Since the tank had no balcony girder, the tower was heavily reinforced at the connection to the vertical shell of the tank to resist the inward thrust of the sloped columns (Pittsburgh-Des Moines Steel Company 1992:37). Initially, the cone bottom tank was a fierce competitor of the curved bottom tank since it was easier to fabricate. Conical bottom tanks lost favor

after 1900, since hemispherical bottoms required less material and were therefore more economical (Dubie 1980:89).

In 1893, what is generally considered the first all-steel water tower constructed in the United Stated was erected in Laredo, Texas, from plans prepared by Edward Flad. Later that year, Jackson & Moss collaborated with their professors from their alma mater, Iowa State University, to build the largest and tallest water tower in the United States on the Iowa State campus in Ames, Iowa. With a capacity of 160,000 gallons and a height of 168 feet, it was an engineering marvel compared to other water towers of the day. No other was as tall, or of a capacity as this structure. Another groundbreaking feature of this structure was its use of arched latticed columns, whereby each panel angled outward at a slightly greater angle to create the appearance of a sweeping curve. The use of a hemispherical bottom, a pagoda roof, and angles to splice the columns to transfer stresses in the rods and struts directly to the columns without secondary stresses were new innovations (Foster and Lundgren 1992:9-11). The following year, in 1894, Horace E. Horton of the Chicago Bridge & Iron Works improved the design for hemispherical shaped bottoms. The first ever, steel plate elevated water storage tank with a full hemispherical shaped bottom was built later that year by Chicago Bridge & Iron Company in Fort Dodge, Iowa (Chicago Bridge & Iron 2012). The last major early all-steel tank that influenced water tower design for the next decade was a water tower built by Chicago Bridge & Iron in Paris, Illinois, which had a stripped-down, simple form and design that set the design aesthetic for traditional style water towers with hemispherical bottoms for decades to come.

All-steel water towers quickly gained widespread acceptance by water systems and a number of manufacturers entered the market. In 1898, one water works engineer stated that "no trouble is experienced at the present time in securing favorable bids for the construction of elevated tanks with round bottoms from a number of reliable firms" (Marston 1898:372; Dubie 1980:87).

Between 1893 and 1905, engineers continued to experiment with the application of a variety of design features to improve upon those developed by J. B. Johnson, Edward Flad, and Freeman C. Coffin in the early 1890s. By 1905, steel water towers had become the preferred type of water storage structure in the United States (Dubie 1980:59).

2.3.4 Elliptical Bottoms, Increased Capacities and Aesthetics, 1907-1928

In the first decade of the twentieth century, engineers continued to focus on improving and refining the designs of Coffin, Flad, and Horace E. Horton. The following decades are characterized by efforts to not only improve upon the design for traditional water towers, but also to increase capacity, and develop new shapes and forms to improve upon aesthetics to address evolving tastes in the United States.

The first major innovation in water tank design came in 1905, when George T. Horton, the son of Horace E. Horton, came up with a design for an ellipsoidal bottom tank for which he received United States Patent 857,626 in June of 1907 (Figure 10). The major advantage of the ellipsoidal bottom, which was first developed for a railroad water tower, was that it allowed for a lower tank height compared to hemispherical-shaped bottom and flat bottom tanks of the same capacity. The benefit of a lower tank height was that it allowed for a lower

head height against which water had to be pumped to enter the tank (Horton 1907). Another advantage over hemispherical bottom tanks was that the ellipsoidal bottom eliminated the need for expansion joints, both at the junction of the riser pipe and tank, and at the enclosure of the riser. With the rigid bottom on a hemispherical bottom tank, these joints were necessary to accommodate the different expansion and contraction rates of the steel tank and the cast iron riser pipe; however, they were subject to wear and often leaked. In addition, the riser could bend or break (Dubie 1980:112). Since the ellipsoidal bottom was nearly flat in the center, a larger riser could be used and riveted or welded directly to the tank, since the bottom plate acted as a diaphragm to take care of expansion and contraction. With its larger size, the riser provided additional support and eliminated the need for frost boxes in cold climates (The Water Tower 1919:4-5; Dubie 1980:112). They also included features to isolate sediment and ease cleaning (Dubie 1980:112). Other benefits compared to flat bottom tanks were that ellipsoidal tanks were self-supporting, so they did not need a heavy support structure and platform, and they did not require a pump to remove water from the bottom of the tank (Horton 1907).

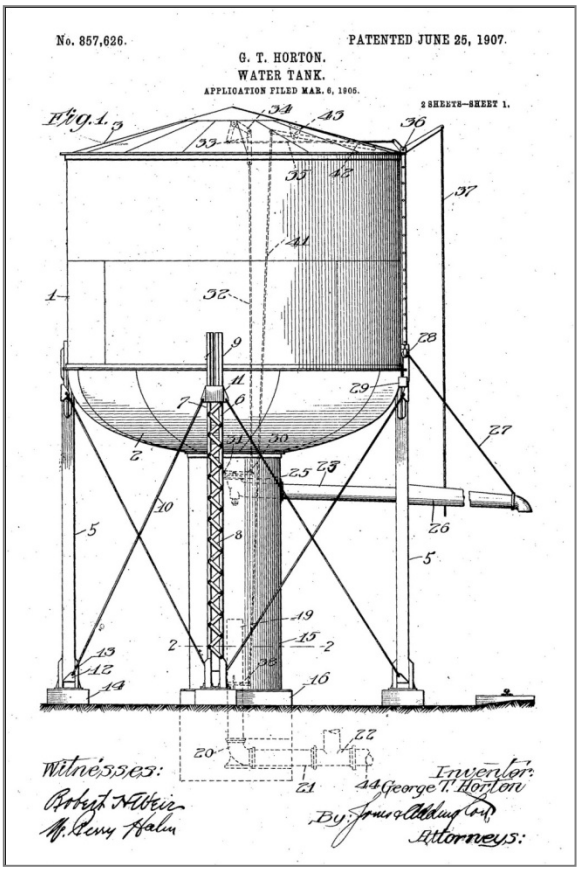

FIGURE 10. ELLIPTICAL BOTTOM TANK, U.S. PATENT 857,626 (Courtesy United States Patent and Trademark Office)

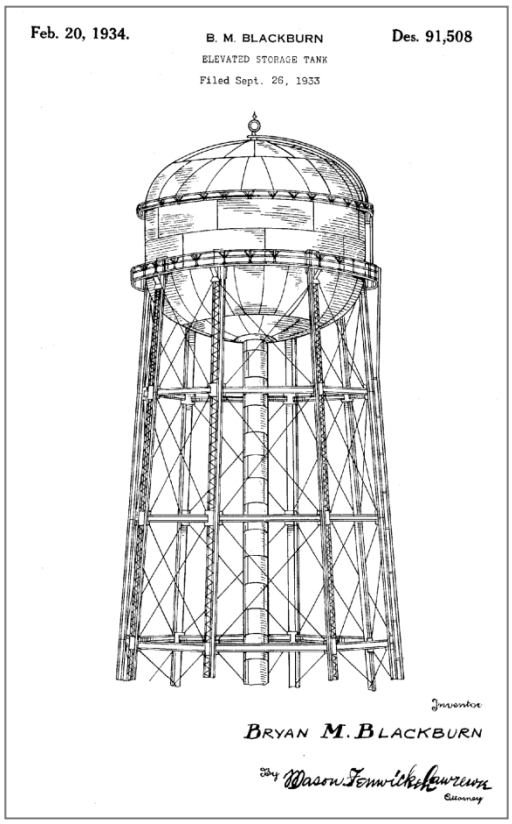

FIGURE 11. DOUBLE ELLIPSOIDAL TANK, U.S. DESIGN PATENT 91,508 (Courtesy United States Patent and Trademark Office)

Growing from the development of the ellipsoidal bottom, self-supporting dome roofs for water towers were invented in 1922, eliminating the need for the support structures required by conical roofs (Figure 11). The decidedly modern appearance of these new horizontally oriented tank forms was in stark contrast with the vertical orientation of traditional style tanks that were a

holdover from the Victorian era. Reflective of their popularity, in 1919, Chicago Bridge & Iron reported that ellipsoidal tanks had been widely adopted by the field of municipal water works engineering largely due to their low variation of pressure, self-cleaning features, and absence of maintenance costs (Dubie 1980:112).

With advancements in the design of hemispherical bottom tanks and the development of ellipsoidal tanks, capacities grew. Tanks of 150,000 gallons or more started to become possible during this period.

2.3.5 New Shapes and Forms, 1928-1967

This period begins with the construction of the first-ever water tower with a spherical tank in 1928 and covers the time span during which many new water tower types and forms were developed, capacities grew, and important advancements were made in fabrication and construction. This period is characterized by a blending of the efforts of engineers to develop new forms in an attempt to increase capacity, with aesthetic considerations that sought to create pleasing new forms that reflected contemporary values.

From an aesthetic standpoint, early attempts to improve the appearance of elevated water storage structures first focused on standpipes. In the 1870s and 1880s, designers focused on architectural treatments to make standpipes fit with their communities and surroundings. Approaches included constructing standpipes with traditional exteriors to conceal their engineering features, applying inexpensive ornamentation, and building a masonry structure around the standpipe to make it appears as though it was a traditional masonry structure (Dubie 1980:10). In 1889, Engineering Record sponsored a competition to improve standpipe design. The results of this completion were published in *Water Tower, Pumping, and Power Station Designs*. This publication offered many new designs, most of which sought to conceal standpipes and make architectural statements. With the advent of the all-steel water tower in the 1890s, the simple form follows function aesthetic of these structures quickly grew in popularity and was embraced by the nation.

While water tower engineers were continually coming up with new ideas to improve structural and functional design, and increase capacity over time, relatively little emphasis was placed on improving the architectural character of water towers since the basic form of the all-steel water tower with a hemispherical bottom was developed in the 1890s. By the late 1920s, traditional style water towers with hemispherical bottoms had become commonplace in the United States for more than three decades. Their vertical orientation and industrial aesthetic was seen as a holdover from another time and not compatible with the progressive movement in American society. As a result, many considered traditional style towers eyesores, and even blight.

Due to increasing pressure from communities to come up with more visually pleasing designs, in 1930, the Chicago Bridge & Iron Company sponsored a design competition seeking new designs. The company outlined the situation in the Forward of the results publication it produced in 1931:

> Elevated tanks are essential to modern water supply systems and steel is the best material for their construction. Inasmuch as steel does not lend itself

> readily to the lines of masonry, the appearance of elevated tanks has often been subjected to adverse comment. Criticism has sometimes been strong enough to cause those responsible for the installation of an elevated tank to surround it with a meaningless enclosure in an attempt to conceal or disguise its identity.
>
> Constructive criticism directs itself not so much to any one structure as to our apparent lack of diversity. We may have carried precise engineering precepts too far and thus left our work gaunt in its bare utilitarian aspect with the result that too many of our elevated tanks are alike. We may also have encouraged our customers to so narrow their requirements as to preclude development along aesthetic lines.
>
> Admitting that we as builders have failed to impart sufficient individuality to various structures entrusted to us, we have recently sponsored the competition which developed the designs reproduced . . . that illustrate the variations obtainable. A few are manifestly impossible while others are so economically unsound as to be impractical. A great majority of them can be utilized, many at no great additional expense over standard designs (Chicago Bridge & Iron Works 1931).

George T. Horton, the president of Chicago Bridge & Iron, was convinced that "through attractive design and proper painting techniques, pleasing appearance could be achieved at a relatively small additional cost" (Leach 1947:651). In its announcement for the competition, the company stated "no serious thought or effort is being given to the aesthetic possibilities of these very necessary parts of our civic and industrial water supply" and that "considerable improvement could be made in the appearance of elevated steel tanks and their supporting structures" (Chicago Bridge & Iron Works 1931). Therefore, the goal of the company was to secure "designs for a typical tank and tower from which may be developed types which will express pleasing aesthetic qualities" (Chicago Bridge & Iron Works 1931). The competition received 152 submittals that fell into three broad groups. The first group included submissions that sought to improve on existing hemispherical and ellipsoidal tank forms through the use of elaborate steel pattern work that reflected European trends. The second group included designs that proposed to totally enclose and conceal the support structure and tank. The third group was much smaller and proposed to use the riser as the sole means of supporting the tank. These designs were based on European influences (Dubie 1980:124). The designs that fell into this last group were manifested in the "streamlined" designs for single pedestal spherical and spheroid tanks with single pedestals that began to appear in late 1930s through early 1950s. Following the Chicago Bridge & Iron competition, a number of new tank types and water tower forms emerged beginning in the mid-1930s.

While the invention of the ellipsoidal bottom tank and self-supporting roofs were important steps towards developing new forms, another important step in the development of new water tower forms was the spherical tank. In 1923, Chicago Bridge & Iron developed the first spherical pressure vessel; however more than a decade and a half would pass before it was applied to water tower design (Chicago Bridge & Iron 2011) (Figure 12). While spherical tanks offered potential for providing the public with a new aesthetic form, from an engineering perspective, their benefit lie in the economy they offered in terms of capacity

and use of less material. In 1928, Chicago Bridge & Iron built the first ever water tower with a spherical tank for a boy's camp in Ponca City, Oklahoma (Dubie 1980:136). This structure had a traditional steel truss support structure with a small spherical tank mounted on top. This structure set the stage for a number of rapid developments. Improving on the design used by Chicago Bridge & Iron for the Ponca City Water Tower, in 1933, Bryan M. Blackburn invented an elevated spherical tank for the storage of water that was designed to set on a single pedestal and received a patent for the design in 1934 (Blackburn 1934). Designs for single pedestal support structures were also patented in 1934. Five years later, in 1939, Chicago Bridge & Iron constructed the first-ever all-welded spherical elevated water storage tank in Longmont, Colorado. This spherical type tank had a capacity of 100,000 gallons and was sold by Chicago Bridge & Iron under the trade name Watersphere® (Chicago Bridge & Iron 2011). Sphere type water towers with single pedestals were sold under various trade names by different manufactures. For example, W. E. Caldwell called their structures Aquaspheres (W. E. Caldwell Company 1962:39). In the 1940s, Waterspheres were the most popular type of tank and more than 100 had been erected across the nation by 1949 (Dubie 1980:140).

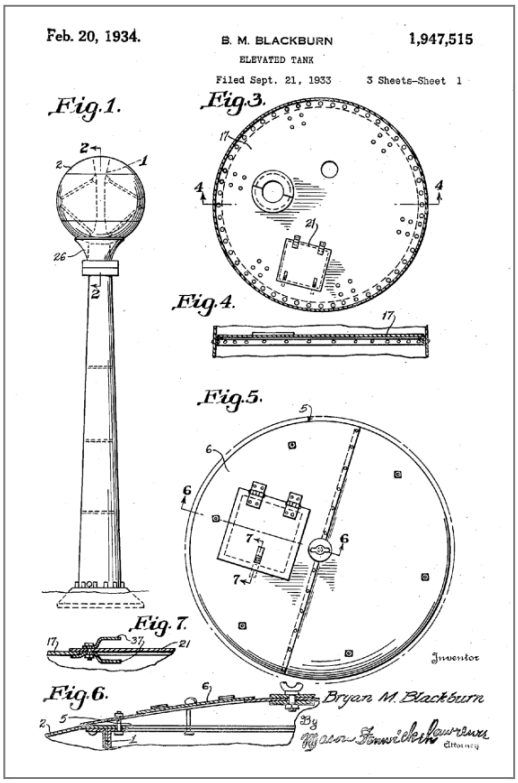

FIGURE 12. SPHERICAL TANK, U.S. PATENT 1,947,515 (Courtesy United States Patent and Trademark Office)

Another tank design that appeared during this period was the double ellipsoidal tank, which allowed for a considerable increase in capacity. These tanks could hold up to 500,000 gallons, a substantial increase over older style tanks. After World War II, for smaller capacity tanks, the spherical tanks with single pedestal or legged support replaced the hemispherical and elliptical bottom tanks, and double ellipsoidal tanks remained a popular low-cost alternative.

Contemporary to the advancements of these tank types was the development of large capacity water towers that could hold 1,000,000 and later 2,000,000 gallons of water or more. These included suspended bottom tanks, toroidal tanks, as well as the radial cone tank. Integral to the development of these high-capacity structures was the invention of tubular steel legs, which replaced the truss support structures on these types of water towers.

The radial cone tank was invented by George T. Horton in 1928 (Figure 13). In his 1929 patent application for the radial cone tank, for which he received Patent 1,844,854 in 1932, Horton described the tank as "having a relatively flat bottom made of sheet metal plates in which said plates takes some tensional stress" (Horton 1932). The plates were also convex to create tensional stress so the plates could be thinner, thus requiring less material. From a functional standpoint, the advantage of the almost flat bottom was that it kept as much

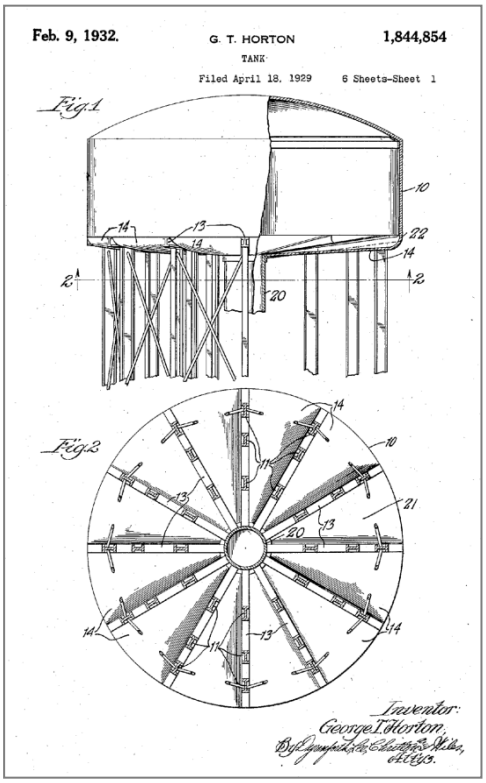

FIGURE 13. RADIAL CONE TANK, U.S. PATENT 1,844,854 (Courtesy United States Patent and Trademark Office)

water as possible above the desired head (Horton 1932). Chicago Bridge & Iron subsequently built the first radial cone tank in 1930 in Brooklyn, New York.

After World War II, toro-spherical tanks with tubular column support structures became the most popular type of tank for large capacity water towers. Oval and toro-spherical water tower designs started to be developed in the mid-1930s. Bryan M. Blackburn patented a design for an oval tank resting on a multi-legged steel truss support structure in 1935. This design included a central tower under the tank, but unrelated to support, to house the riser, overflow pipes, and to provide a chamber at the base for housing the instruments related to filling and draining the tank (Blackburn 1935). Full toro-spherical shaped tanks evolved over the next decade and a half, with Chicago Bridge and Iron filing a patent for a toro-type tank in 1958, which was issued Patent 2,961,118 in 1960 (Figure 14). The benefit of this type of large capacity tank was that unlike radial cone tanks that required support ribs under the tank, the bottom plate on the toro-spherical tank was self-supporting (Miller and Pirok 1960).

For large capacity water towers, another innovation was the introduction of large diameter fluted columns as a way to improve aesthetics by eliminating multiple legs under the tank. This innovation led to the development of fluted columns, also known as pillar type water towers in the early 1960s. The first designs for pillar type water towers were patented by Pittsburgh-Des Moines in 1963 and the first one was built in 1964 (Anderson 1963). However, none were built in South Dakota until 1969.

In 1949, spheroid tanks were introduced (Dubie 1980:140). These distinctive tanks, with their conical shaped bottom plates and half-spherical domed roofs, giving them a profile similar to that of a hot air balloon, evolved from spherical tanks. Bryan M. Blackburn applied for a patent for this new type of

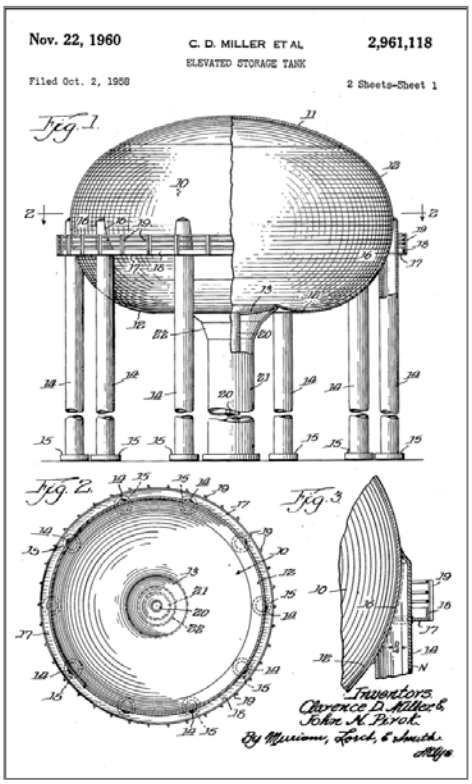

FIGURE 14. TORO-ELLIPSOIDAL TANK, U.S. PATENT 2,961,118 (Courtesy Unites States Patent and Trademark Office)

tank in 1950 and received United States Patent 2,657,891 for the design in November of 1953 (Figure 15). The purpose of this design was to combine "maximum capacity with structural sturdiness, attractive appearance, facility of erection, and economy of material required (Blackburn 1953). From a structural standpoint, the main advantage of this form over spherical tanks was that it eliminated the need for a series of external radial support brackets and internal equatorial tensioners that were required by spherical tanks (Blackburn 1953). Spheroid tanks also have higher capacities than spherical tanks. Typically, they hold at least 200,000 gallons of water. Chicago Bridge & Iron built the first ever spheroid tank in Northbrook, Illinois in 1954. This structure was built by Chicago Bridge & Iron under the trade name Waterspheroid® and had a capacity of 500,000 gallons (Chicago Bridge & Iron 2012).

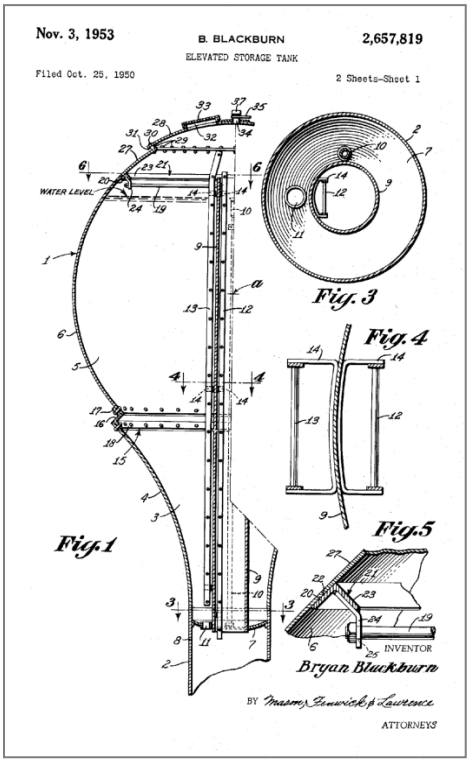

FIGURE 15. SPHEROID TANK, U.S. PATENT 2,657,819 (Courtesy United States Patent and Trademark Office)

During this period paint colors for water towers varied. Early on, green graphite and aluminum paint were the two most common colors used. One popular paint scheme of the period, especially for large capacity water towers, was green graphite paint for the support structure and arch ribs (if there were any), and aluminum paint on the tank (Dubie 1980:134). Later on, white became a more popular color, especially for single pedestal spherical and spheroid style water towers.

2.3.5.1 Advent of Welding

Another important advancement related to all of these new water tower types and forms was the advent of welding, particularly after World War II. Prior to the war, most water towers were constructed using rivets. This somewhat limited construction technique placed constraints on water tower design. In 1933, Chicago Bridge & Iron analyzed the potential is using welding to join metals and began experimenting with the use of welding to field-erect flat-bottomed storage tanks. Welding was found to be in many ways superior to riveting at it allowed for simple details and eliminated the potential of leakage from improperly driven rivets (Leach 1947:651).

The use of welding not only sped up construction, it allowed for much greater flexibility in design, which allowed engineers to come up with new tank types and water tower forms that would not have been feasible with riveted construction. In 1950, Chicago Bridge & Iron developed the automatic girth seam welder. This innovation was an important advancement for water tower erection because it significantly reduced the amount of time required to assemble a water tower (Chicago Bridge & Iron 2011).

2.3.5.2 Site Planning and Aesthetics

Beginning in the late 1950s, ever-increasing attention began to be given to site selection for water works and water towers. While topography had been important consideration for decades, water system engineers now had to consider zoning regulations that were being adopted by municipalities around the country and aeronautic regulations, both of which restricted where water towers could be built. In terms of zoning, water system engineers had to work within the constraints of zoning laws to select and plan sites. As a public utility, and often a non-conforming use, water systems often had to petition a municipality for approval (Harrison and Emery 1960; Haskew 1963). Upon the establishment of the Civil Aviation Administration (CAA) in 1938, it developed regulations governing the location and heights of water towers within certain distances of airports. The CAA also introduced requirements specifying when aviation lights were required on water towers. To ensure compliance with these regulations, the CAA required it be notified 30-60 days prior to construction of any water tower 150 feet in height within 20 miles of a civil airway or of any tank within 15,000 feet of a boundary of a landing area more than five feet high for each 500 feet of distance from the landing area (Haskew 1963).

In terms of site design and aesthetics, a number of articles began to appear in professional journals in the early 1960s that provided guidance on placement and advice on architectural and landscaping considerations. Much of the guidance on landscaping was focused on developing a well landscape site to reduce the amount of public objections to new towers due to their perceived "unsightliness." To this end, publications recommended well-landscaped sites with trees, shrubs, and lawns. In the case of existing wooded sites, publications recommended retaining as many trees as possible to block views of the tower legs. Guidance also focused on the long-term, encouraging ample setbacks from streets so large lawns would remain even in the event of future a street widening. For associated buildings, publications placed an emphasis on an expected life expectancy of 60-70 years. Therefore, they recommended that building plans include provisions for expansion. The use of durable materials such as brick and concrete were encouraged, along with corrosion-resistant metals, glass block, and terrazzo for floors. Architecturally, trade publications discouraged the "ugly, box-like" designs of the past and encouraged attractive designs that would not quickly fall out of favor with changing aesthetic tastes (Harrison and Emery 1960; Haskew 1963).

2.4 WATER TOWER MANUFACTURERS AND FABRICATORS

Early on, especially during the all-wood water tower era, local builders constructed most water towers. With the advent of steel water towers, some early structures were built by local iron and steel works and boiler shops. An example was the R. D. Cole Manufacturing Company of Newman, Georgia, which was the second leading manufacturer of water towers in the United States in the 1890s (Dubie 1980). R. D. Wood of Philadelphia and Riter and Conley of Pittsburgh were also major fabricators of standpipes and conical bottom tanks in the 1890s (Dubie 1979). With the dawn of the twentieth century, as all-steel construction and hemispherical shaped bottom tanks took hold, and as towers became larger, fabrication and construction techniques became more specialized. Correspondingly, water tower construction quickly exceeded the capabilities of local builders. A number of specialized manufactures soon emerged, and by the mid-twentieth century, two large companies

emerged to dominate the market, the Chicago Bridge & Iron Works and Pittsburgh-Des Moines Steel. As their market share grew and they diversified their portfolios, both quickly grew to become large, international corporations. Between 1946 and 1972, the Chicago Bridge & Iron Works and Pittsburgh-Des Moines Steel had roughly equal market shares, which ranged from 35 to 45 percent (Spreng 1992). Several smaller companies competed for the remaining share of the market. These companies included the Universal Tank & Iron Works, which held a sizable portion of the remaining market (Spreng 1992). Caldwell Tank (nee W.E. Caldwell) was another manufacturer that retained a steady market share through the second half of the twentieth century.

After the consolidation and reorganization of several water tower manufactures in the late twentieth century and the breakup of Pitt-Des Moines in 2000-2002, there were three major water tower manufactures at the start of the twenty-first century. These companies were Chicago Bridge & Iron, Inc., with facilities in suburban Chicago and Houston; Phoenix Fabricators & Erectors (formerly Universal Tank & Iron) of Avon (Indianapolis), Indiana; and Caldwell Tank Inc. in Louisville, Kentucky. There are also several smaller manufacturers that have a regional presence, including Sioux Falls-based Maguire Iron, which got into water tower fabrication when it acquired Master Tank in 1982.

2.4.1 Chicago Bridge & Iron Works

The Chicago Bridge & Iron Company was formed in 1889 by the merger of Horace Ebenezer Horton's bridge engineering firm that was located in Rochester, Minnesota with the Kansas City Bridge & Iron Company. Upon the merger, the company moved to Washington Heights, Illinois, a suburb located south of Chicago, and opened its first fabricating plant (Chicago Bridge & Iron 2011). Given Horace Horton's notoriety as a bridge engineer, the company was originally a bridge design and construction firm. However, as railroads built westward and oil was discovered in the southwestern United States in the late nineteenth and early twentieth century, the company saw an opportunity and began to focus on bulk liquid storage. The company soon became well known for its excellent design engineering and field construction of elevated water storage tanks, aboveground tanks for storage of petroleum and refined products, refinery process vessels, and other steel plate structures (Chicago Bridge & Iron 2011).

In 1893, the company built its first standpipe in Lake City, Iowa. The following year, in 1894, the company completed its first steel plate elevated storage tank in Fort Dodge, Iowa. This tank was the first ever built with a full hemispherical bottom (Chicago Bridge & Iron 2011). As Horace Horton and his son, George T. Horton perfected the hemispherical-shaped bottom, eliminating the need for a complex tank deck, their towers became increasingly popular (Imbermann 1973:457-458). As a result of this and other innovations, and a pioneering nationwide marketing campaign, in only a few short years, the Chicago Bridge & Iron Works became the leading manufacturer of elevated water storage tanks in the United States (Dubie 1979:1).

After the death of Horace E. Horton in 1912, George T. Horton assumed leadership of Chicago Bridge & Iron and maintained the company's track record as a leading innovator in water tower design through the mid-twentieth century. Prior to taking over the company, in 1905, George T. Horton came up with a design for an ellipsoidal bottom tank for which he

received United States Patent 857,626 in June 1907. The benefit of this design was that it allowed for a lower tank height compared to a hemispherical-shaped bottom tank, while eliminating the need for a pump to remove water from a flat bottom tank (Horton 1907).

Reflective of its effort to improve not only functionality, but also aesthetics, in 1930, Chicago Bridge & Iron sponsored a design completion. In its statement of purpose for the competition, the officers of the company proclaimed that they were of the opinion that "considerable improvement could be made in the appearance of elevated steel tanks and their supporting structures" and that "no serious thought or effort is being given to the aesthetic possibilities of these very necessary parts of our civic and industrial water supply" (Chicago Bridge & Iron Works 1931). Therefore, the goal of the competition was to secure "designs for a typical tank and tower from which may be developed types which will express pleasing aesthetic qualities" (Chicago Bridge & Iron Works 1931). The competition received 152 submittals that fell into three broad groups. The first group included submissions that sought to improve on existing hemispherical and ellipsoidal tank forms through the use of elaborate steel pattern work that reflected European trends. The second group included designs that proposed to totally enclose and conceal the support structure and tank. The third group was much smaller and proposed to use the riser as the sole means of supporting the tank. These designs were based on European influences and were later manifested in the "streamlined" designs for single pedestal spherical and spheroid tanks in late 1930s through early 1950s (Dubie 1980:124).

In 1923, Chicago Bridge & Iron developed the first spherical pressure vessel and 16 years later, in 1939, the company built the first-ever all-welded spherical elevated water storage tank in Longmont, Colorado. This spherical type tank had a capacity of 100,000 gallons and was sold by Chicago Bridge & Iron under the trade name Watersphere® (Chicago Bridge & Iron 2011).

After World War II, Chicago Bridge & Iron continued its pattern of innovation. In 1950, the company developed the automatic girth seam welder. This innovation was an important advancement for water tower erection because it significantly reduced the amount of time required to assemble a water tower (Chicago Bridge & Iron 2011).In 1954, Chicago Bridge & Iron built the first-ever spheroid type water tower in Northbrook, Illinois. This new water tower type had a capacity of 500,000 gallons and was sold by Chicago Bridge & Iron under the trade name Waterspheroid® (Chicago Bridge & Iron 2011).

In 2001, Chicago Bridge & Iron acquired the Engineered Construction Division and the Water Division of Pitt-Des Moines, Inc. for an estimated $84,000,000 (Chicago Bridge & Iron 2011).

2.4.2 Pittsburg-Des Moines Steel

Pittsburgh-Des Moines Steel, later Pitt-Des Moines, and its predecessors were the leading builders of water towers for drinking water systems in South Dakota.

Pittsburgh-Des Moines Steel traces its beginning to 1892, when two recent graduates from the civil engineering program at Iowa State University formed a partnership, known as Jackson and Moss, Engineers and Contractors (Foster and Lundgren 1992:3). That fall, the

company won its first project, the design and construction of a water system for the town of Boone, Iowa. For this system, Jackson and Moss designed a small, elevated, wood stave tank with flat bottoms that served to equalize pressure in the system (Foster and Lundgren 1992:3-4). Later that year the company landed its second project, which was to build a water works for Union, Iowa (Foster and Lundgren 1992:3-4). Knowing that wood structures would only last a few years, Jackson and Moss designed a steel support structure comprised of steel beams to support a flat deck for a wood tank (Foster and Lundgren 1992:4). Jackson and Moss obtained a patent for this system, known as the "J&M Joist System" in 1896 (Foster and Lundgren 1992:4; Jackson and Moss 1896). By 1905, the company had built more than 85 towers using this system (Foster and Lundgren 1992:38). The company built its first all-steel water tower in Scranton, Iowa in 1897 and later invented a dishing machine to form the hemispherical plates for the bottom of the tank (Foster and Lundgren 1992:38).

To grow and be more competitive, and to gain more control over its steel supply, Jackson and Moss merged with their steel supplier on March 15, 1900, to form the Des Moines Bridge & Iron Works (Foster and Lundgren 1992:14). The company quickly grew and in 1907, it acquired a site and built a new steel plant in Pittsburgh, Pennsylvania. The purpose of the new plant was to allow the company to increase production and develop a larger market presence in the eastern United States. Three years later, in 1910, the company moved its corporate headquarters to Pittsburgh. After the move, the company soon began to view its name as being too regional and not reflective of its increasingly national presence, so in 1914, the company began using the name "Pittsburg Des Moines Steel Company." The company officially reorganized under the name "Pittsburgh Des Moines Steel Company" on February 14, 1916, and the company began using "PDM" as a company trademark in 1930. While the company continued to use the "PDM" trademark, in order to keep pace with national trends in marketing and rebranding, the company continued to consolidate its name over time to the "Pittsburgh-Des Moines Steel Company" in 1955, "Pittsburgh-Des Moines Corporation" in 1980, and to "Pitt-Des Moines, Inc." in 1985.

Between 1901 and 1910, the Des Moines Bridge & Iron Works constructed more than 150 all-steel water towers across the Midwest, including water towers in South Dakota (Foster and Lundgren 1992: 38). As of 1914, Pittsburgh-Des Moines had completed water towers in 35 states, seven Canadian provinces, and five foreign countries (Foster and Lundgren 1992:38). By 1915, Pittsburgh-Des Moines had built more that 15,000 water towers and standpipes, spread across 43 states and eight foreign countries (Foster and Lundgren 1992:19). Two decades later, in 1935, a company newsletter touted that Pittsburgh-Des Moines had "elevated tanks in every state and territory in the Union; and on every continent, including 35 foreign countries" (Foster and Lundgren 1992:5).

In the 1970s, the company created a non-union subsidiary named Hydrostorage to compete with Universal Tanks & Iron Works, one of Pittsburgh-Des Moines greatest competitors. In the early twenty-first century, Pitt-Des Moines fell on hard times. Between 2000 and 2002, Pitt-Des Moines sold off all of its operating business units and ceased to exist. The Engineered Construction and Water divisions of Pitt-Des Moines were acquired by Chicago Bridge & Iron for $84,000,000 in 2001 (Chicago Bridge & Iron 2011).

2.4.3 Minneapolis Steel and Machinery Company

Minneapolis Steel and Machinery was a water tower manufacturer that had a small presence in South Dakota. Minneapolis Steel and Machinery Company was one of the many steel works across the United States that ventured into the water tower and standpipe business in the early twentieth century in an attempt to capture a share of a rapidly growing market, before Chicago Bridge & Iron and Pittsburgh-Des Moines Steel emerged as the industry leaders in 1920s and 1930s.

The Minneapolis Steel and Machinery Company was incorporated on April 24, 1902, by J.L. Record and Otis Brigs (Library of Congress 2012). The company's office and plant were located near the intersection of Minnehaha Avenue and East Lake Street in Minneapolis, Minnesota. Originally, the company specialized in the manufacture of steel components for office and buildings, elevators, highway and road bridges, and towers and tanks. In order to expand and diversify its business, in 1910, the company began to manufacture tractors. The company later went on to manufacture farm implements, trucks, and even buses. In 1929, Minneapolis Steel and Machinery merged with the Moline Implement Company and the Minneapolis Threshing Machine Company to form the Minneapolis-Moline Power Implement Company.

It is unknown exactly how long Minneapolis Steel and Machinery manufactured water towers and tanks, or how many the company produced. However, according to its annual reports, the company was in the tower and tank business by at least 1906. Based on a known construction date for a water tower in Deerwood, Minnesota, Minnesota Minneapolis Steel and Machinery continued to manufacture water towers and standpipes through at least 1920 (McDowell 2012). According to company annual reports, from the years 1906 through 1914 when the company provided data on steel orders for each of its product divisions, the manufacture of water towers and tanks represented a relatively small portion of the company production in terms of tons of steel produced.[11]

Minneapolis Steel and Machinery manufactured both water towers and standpipes. The company offered water towers with capacities ranging from 5,000 gallons to 400,000 gallons. The company manufactured water towers for both municipalities and private industries across the Midwest, West Coast, Canada, and Mexico. Minneapolis Steel and Machinery erected water towers in California, Colorado, Idaho, Minnesota, New Mexico, North Dakota, South Dakota, Utah, Washington, and Manitoba. Minneapolis Steel and Machinery also built standpipes in Colorado, Minnesota, Washington, and Saskatchewan.[12]

---

[11] Data from Minneapolis Steel and Machinery annual reports, 1904-1916.

[12] Based on historic photographs included in the Minneapolis Steel and Machinery files within the Minneapolis-Moline Company records on file at the Minnesota Historical Society and on data within "Water Towers and Tanks, Pumping Stations" Minneapolis Steel and Machinery Co., 1910.

2.4.4 Omaha Structural Steel Works

Like its larger brethren, Chicago Bridge & Iron and Pittsburgh-Des Moines, the Omaha Structural Steel Works was another Midwestern steel manufacturer that forayed into the water tower market in the early twentieth century. The offices and works of the company were located at the corner of 48th and Leavenworth Streets in Omaha, Nebraska. In 1914, the company advertised itself as "engineers, contractors and manufactures" specializing in "steel bridges, structural iron works, tanks, water towers, standpipes, smokestacks, etc." The company also touted that it carried "a full line of beams, channels, angles, plates, bars and reinforcing plates" (letter from Omaha Structural Steel Works to Galt Brothers, 1914).

While not as large and successful as Chicago Bridge & Iron and Pittsburgh-Des Moines, in the early twentieth century Omaha Structural Steel was a nationally known bridge manufacturer that attempted to compete in the water tower market. The company is perhaps best known for providing the steel used to construct the Nebraska State Capitol. However, Omaha Structural Steel is also credited with fabricating bridges in Arizona, providing steel for buildings as far away as Montana, and erecting several water towers in South Dakota, including those in Doland (SP00000367) and Utica (YK00000949).

2.4.5 W. E. Caldwell

The W.E. Caldwell Company, now Caldwell Tanks, was founded by William E. Caldwell in Louisville, Kentucky in 1887. While Caldwell offered wood tanks longer than most other major builders did, it was also a leader in the design of support structures, patenting a design for a metal tank with a timber and iron support structure in 1892 (Caldwell 1892).

Learning from the success of the national marketing campaign initiated by the Chicago Bridge & Iron Works in the late nineteenth century, Caldwell also embarked on a national marketing effort, which enabled the company to grow and became one of the more prominent builders of water towers in the United States by the early twentieth century. Reflective of this national marketing effort, Caldwell's twentieth annual catalog, published in 1908, touted the fact its catalog had a circulation of "one million copies" (W.E. Caldwell Company 1908:1). By this time, the company had also erected water towers in 34 states (W.E. Caldwell Company 1908:31). Due to its successful marketing efforts, Caldwell was able to grow enough to be able to compete with Chicago Bridge & Iron and Pittsburgh-Des Moines, thus allowing the company to retain a sufficient market share to remain in the water tower manufacturing business. Today, Caldwell Tank is one of the largest manufactures of water towers in the United States. W.E. Caldwell has built several water towers in South Dakota. Caldwell built a waterworks in Menno sometime between 1924 and 1931. The oldest known water tower in South Dakota manufactured by W.E. Caldwell is a small, 20,000 gallon, water tower construed in 1954 for a subdivision near Box Elder (PN0000804).

2.4.6 Other Designers, Steel Suppliers, and Fabricators

Most of the all-steel water towers constructed in South Dakota came from manufactures offering full design and fabrication capabilities, meaning that the company had the capacity to design, fabricate, and erect the structure. However, there are a small number of water

towers throughout the state that were designed by an engineer and constructed using steel supplied by an unrelated manufacturer. This group of structures is mostly comprised of traditional style, legged water towers constructed prior to World War II. After World War II, engineers continued to design water systems, and often developed general plans for water towers, e.g. type, capacity, height, etc., but the tower was then provided by a large manufacturer, often following a standard plan that met the engineer's requirements. If a builder's plate exists, it may only identify the engineer or steel supplier. When a builder's plate is not present, the name of the steel often appears in raised text on major structural beams, such as channel or H-beams, forming the legs. It is unknown if these water towers are the result of partnerships between specific engineers and steel companies, or if this reflects the use of a different contracting process by municipalities, e.g., design and construction contracts would have been offered under two separate requests for proposal processes. Further study of these towers is recommended to determine if they represent a significant or innovative design-build process.

Engineers known to have designed some of these structures include ***W.D. Lovell*** of Minneapolis, Minnesota. Lovell was a civil engineer who specialized in the design, construction, and operation of water works, and later became the general contractor for a number of federal buildings across the United States. W.D. Lovell is known to have built a standpipe in Red Oak, Iowa in 1895, as well as water towers in White Plains, New York (1917), Wilton, North Dakota (1918), and one at Brownville Mill in Minnesota (1921). In South Dakota, Lovell is credited with designing the water tower in Castlewood (1929) (HL00000166), which was manufactured by Chicago Bridge & Iron. As a general contractor, W. D. Lovell is credited with constructing the United States Post Office in La Porte, Indiana (1912); the Federal Building and United States Courthouse in McAlester, Oklahoma (1913-1914); the Coeur d'Alene Federal Building (1927-1928) and the Sandpoint Federal Building (1928) in Idaho; and the Federal Building and United States Courthouse in Independence, Kansas (1936).

Steel manufacturers known to have provided steel for constructing these water towers include the Illinois Steel Company and the Jones & Laughlin Steel Company.

The ***Illinois Steel Company*** was a major Chicago based steel manufacturer. The company was created by the merger of many of the largest steel mills in the Chicago area in 1889. Upon its incorporation, Illinois Steel became the largest steel company in the United States, employing nearly 10,000 employees in its many mills. In 1901, famed New York financier J. P. Morgan acquired Illinois Steel as part of his effort to create U.S. Steel, which at the time was the largest business enterprise in the world (Bensman and Wilson 2004).

Illinois Steel manufactured steel for many water towers and is known to have provided the steel for at least one water tower in South Dakota, in the town of White Lake (AU00000064).

Jones & Laughlin Steel, also known as J&L Steel, was a steel manufacturer based in Pittsburgh, Pennsylvania. The company traces its origins to the American Iron Company, which was founded just south of Pittsburgh, Pennsylvania in 1853. In 1861, American Iron became the Jones & Laughlin Steel Ltd. after a change of ownership. J&L originally only produced iron, but began manufacturing steel in 1886 and grew to become one of the largest

makers of iron and steel in the United States during the nineteenth and twentieth century. The company was incorporated as the Jones & Laughlin Steel Company in 1902 and reorganized as the Jones & Laughlin Steel Corporation in 1922 in order to raise capital to expand. Reflective of its growth, J&L opened additional mills in Aliquippa, Pennsylvania in 1909, and Cleveland, Ohio in 1923. In 1936, J&L Steel was the fourth largest steel supplier in the county. An advertisement from 1937 indicates the company produced a full line of products. However, unlike competitors such as Chicago Bridge & Iron and Pittsburgh-Des Moines that were founded by engineers and correspondingly offered structural design services, J&L Steel primarily focused on the manufacturing of iron and steel components for use in construction and does not appear to have offered design services. Ling-Temco-Vought (LTV) acquired a controlling interest in J&L Steel in 1968, but the company remained an independent until it was merged into LTV in 1974. All J&L Steel production facilities were closed by 1989 (University of Pittsburgh, Archives Service Center 2012; Harvard School of Business, Lehman Brothers Collection 2012; New York Times 1922).

Despite its size, J&L Steel is not well known for water tower fabrication. It is unknown if the company only fabricated, or also designed water towers. There is also no known record of water towers constructed by the company; however, J&L Steel is known to have manufactured the steel for at least one water tower in South Dakota, in the town of Duncan (DV00000304).

The ***McClintic-Marshall Company*** is credited with fabricating at least one water tower in South Dakota, the South Water Tower located in Aberdeen (BN00000722). Primarily a bridge builder, the McClintic-Marshall Company was one of the largest steel fabricators in the United States in the early twentieth century, with plants in Pittsburgh and Chicago. The company constructed bridges and erected skyscrapers from coast to coast, and even fabricated the steel superstructure for the Golden Gate Bridge. In the mid-1930s, Bethlehem Steel acquired McClintic-Marshall so the company could build and erect the steel it manufactured (The Morning Call 2012).

Another major manufacturer of water towers in the United States was the ***Universal Tank & Iron Works*** of Indianapolis, Indiana. The company was a long-standing rival of Chicago Bridge & Iron, but fell on hard times in the late twentieth century. In 1986, Universal Tank & Iron filed for bankruptcy and was acquired by Phoenix Fabricators & Erectors. Phoenix Fabricators & Erectors was founded earlier that year by six former employees of Universal Tank & Iron who thought they could run a better company and struck out on their own (Schoettle 2006). From a bankrupt Universal, Phoenix grew, with sales increasing to $18,000,000 in 1988, to $50,000,000 in 2003, to $80,000,000 in 2006, when the company acquired Sebree, Kentucky based Pittsburgh Tank and Tower (Schoettle 2006). Universal Tank & Iron is credited with manufacturing a number of water towers in South Dakota; however, the earliest ones appear to have been erected in the 1970s, outside the period for this context. Additional survey is needed to determine if the company built any water towers within the period for this historic context.

3.0 THE IDENTIFICATION AND EVALUATION OF STEEL WATER TOWERS ASSOCIATED WITH WATER SYSTEMS IN SOUTH DAKOTA

3.1 INTRODUCTION

A resource type is a generic term for a similar or related set of historic resources. The focus of this historic context study is all-steel water towers that are associated with drinking water systems, which is a resource type based on design and material as well as use.

There are a number of common alterations, additions, and accretions that are common to water towers associated with drinking water systems. These include alterations that are necessary to maintain the functionality and historic use of the water tower; alterations and additions to improve safety that may or may not be required to maintain the historic use; and alterations, additions, and accretions related to an additional use of the structure.

When documenting a water tower, it is important to identify the manufacturer. The easiest way to identify the manufacturer is by checking the builder's plate. On traditional style legged towers with truss support systems the builder's plate is usually located near the bottom of the leg where the ladder is located. On water towers with vertical tubular steel legs, the builder's plate is usually located on the riser. On single pedestal water towers, the builder's plate is normally located either on or adjacent to the access door. If the builder's plate is missing, the manufacturer can sometimes be determined based on the style of the balcony railing if one is present.

Early on, most water tower manufacturers utilized a simple two-rail lateral pattern balcony railing on their water towers. However, as companies grew and sought to distinguish themselves for marketing purposes, many developed their own distinctive and easily recognizable balcony railing designs. These railings make it much easier to identify a manufacturer. Water towers manufactured by Pittsburgh-Des Moines are easily recognized by their distinctive "sawtooth," or "W" style, balcony railings. Water towers manufactured by Chicago Bridge & Iron have "IXIXI" pattern balcony railings. The only exceptions to this rule are some very early steel water towers manufactured by Chicago Bridge & Iron, which may have a simple two-rail, lateral pattern balcony railing. The W.E. Caldwell changed the design for its balcony railings over time. Early on, Caldwell used a single pipe railing on its wood tanks and early flat-bottom steel tanks, but by 1909, Caldwell was using a two-rail lateral pattern guardrail on its hemispherical bottom steel tanks. Sometime between 1931 and 1937, Caldwell introduced an "IXIXI" pattern balcony railing that was mostly used on its ellipsoidal bottom tanks. These railings have a very elongated "X," so they are quite distinctive from the Chicago Bridge & Iron style balcony railings. Water towers manufactured by the Minneapolis Steel and Machinery Co. often have either a diamond pattern (very narrow "X" pattern), or two-rail, lateral pattern balcony railings.

3.2 WATER TOWER TYPES

Water towers can be organized and classified in a number of ways. They can be categorized by use (e.g. drinking water or railroad), size/capacity, tank type, support structure type, and even builder. Since there can be many variations and even overlap between these categories,

for the purpose of this study water towers are organized by support structure, legged or single pedestal, and then by tank type. By using this descriptor to organize towers, only spherical tanks appear in both categories.

Water towers were generally shipped to the construction site unassembled. Prior to the increasing use of cranes in the second half of the twentieth century, a gin pole was used to erect the trestle. A temporary work platform was then attached to the uppermost portions of the legs and the bottom plate was assembled and attached to the legs. The tank walls were then riveted together course-by-course, by using a light cage swung on the outside of the tank. In colder climates such as South Dakota, the riser pipe was inserted through the gin pole framing, which was then enclosed to serve as a frost box to protect the pipe from freezing (Dubie 1979).

3.2.1 Legged Towers

The earliest elevated water storage structures constructed in South Dakota for the purpose of fire projection and/or storing drinking water were of all-wood construction. A few water towers with masonry support structures and wood tanks were also constructed in the late nineteenth century along the eastern border of the state, where there was an abundant supply of quartzite, including ones in Sioux Falls and Dell Rapids (MH00001382; NRHP 1984). However, as advances were made in steel construction in the 1890s and early 1900s, all-steel towers became the norm by the 1910s and continued to be built in the first two decades after World War II.

These all-steel water towers had tanks resting on metal trusses comprised of legs or posts, typically support struts, and spiders (cross bracing). Legged towers have at least four legs. Towers with large capacity tanks, typically 150,000 gallons or more, they will have additional legs to support the tank.

3.2.1.1 Leg types

Legged type water towers have a steel truss support system that is comprised of legs, truss rod cross braces, and often support struts. Legs can be arced, angled, or vertical, depending on the style of the water tower (see below). Legs and support struts can be constructed of angle iron, latticed channels, plates and angles latticed, Z-bar columns, and tubular or Phoenix columns (Figure 16) (Dubie 1980:82; Engineering News 1891:560). Larimer columns were also used, but they are not known to have been used in South Dakota.

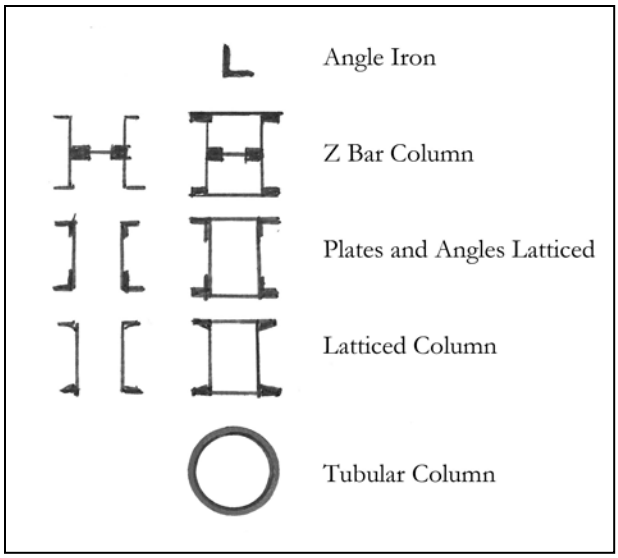

FIGURE 16. SUPPORT STRUCTURE LEG TYPES

3.2.1.2 Traditional Style Towers

Traditional style water towers, sometimes referred to as "tin can" water towers, started to be built in South Dakota beginning in 1894, and were the predominant type of water tower constructed in the state through World War II. They continued to be built through the first two decades after World War II, but in greatly reduced numbers. Most but not all were built according to standard specifications (Figure 17).

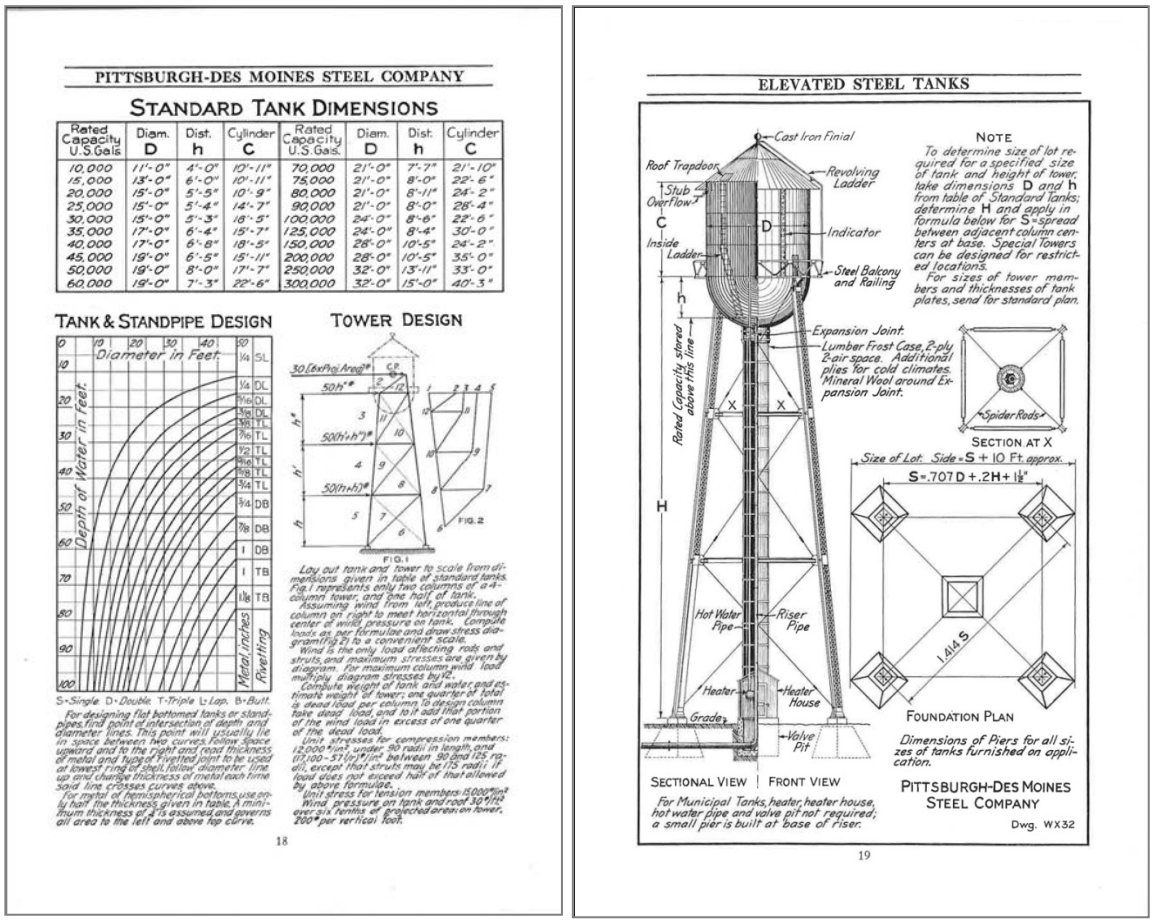

FIGURE 17. STANDARD WATER TOWER SPECIFICATIONS

(Source: *Steel Water Towers for Public Service*, Pittsburgh-Des Moines Steel Company, 1915)

Traditional style water towers are constructed with rivets and have a steel truss support structure with angled legs, typically of latticed construction, a vertical tank with a hemispherical shaped bottom, a conical roof, and a balcony (Figure 18). Capacity can range from 5,000 gallons up to 300,000 gallons, with 50,000 and 100,000 gallon tanks being most common. Typically, they have four legs, but higher capacity towers may have more. Most have straight legs, but a few rare examples have arched legs that flare outward. A ladder is attached to one leg and the builder's plate is usually on the same leg. Some examples that date from roughly 1907 until World War II may have an ellipsoidal bottom tank. On rare occasion, a tank may have a flat bottom tank mounted on a platform above the steel truss. Flat bottom tanks were a carryover from wood water tower designs and were rarely used by water systems after the development of hemispherical shaped tank bottoms in the twentieth

century. Most tanks with hemispherical shaped bottoms typically have small diameter cast iron risers that are joined to the tank by an expansion joint, which often necessitated a wood frost box casing in northern climates like South Dakota (CB&I 1929:11). A large-diameter riser under a hemispherical-bottom indicates the presence of a heating system.

3.2.1.1 Double Ellipsoidal

Double ellipsoidal tanks have ellipsoidal shaped bottoms and roofs, and vertical walls (Figure 19). They may have a steel truss support system, or later examples may have vertical tubular columns' legs. The number of legs depends on the tank size, but four is most common. They may or may not have a balcony around the tank. Double ellipsoidal water towers have larger risers than traditional style tanks, usually 30" to 72" in diameter so no frost box was required. The builder's plate may be located on a leg, if a ladder is present, or on the riser. The first double ellipsoidal tanks were built in the 1930s and they continued to be built into the twenty-first century. Capacities can range from 50,000 gallons up to 500,000 gallons, although larger ones can be found.

3.2.1.2 Torus Bottom

Torus bottom tanks are similar to double ellipsoidal tanks, but are larger. These types of water towers are easily identified by the conical shaped transition in the bottom of the bowl to the riser. Torus bottom tanks usually have a capacity of 200,000 gallons up to 2,000,000 gallons or more. They have vertical tubular column legs. Given their size, they usually have more than four legs. These types of water towers date from the 1950s and later.

3.2.1.3 Spherical

Spherical water towers with legged support structures usually have a steel truss support system (Figure 20). Most have a circular girder to strengthen the connection between the support structure and the tank. Early spherical legged typically had a capacity of 150,000 gallons or less, but modern tanks can have capacities of up to 250,000 gallons. Spherical legged water towers have a small diameter riser. The first ever water tower of this type was built in Oklahoma in 1928 and they continued to be built into the 1960s.

3.2.1.1 Toro-Spherical and Toro-Ellipsoidal

Oval shaped water tower designs started to appear in the mid-1930s; however, true toro-spherical and toro-elliptical shaped tanks were not perfected until the late 1950s and did not begin to appear on the landscape until around 1960. Toro-spherical and toro-ellipsoidal tanks are large, typically with capacities of 250,000 to 500,000 gallons, but can be 1,000,000 gallons or more (Figures 21 and 22). They typically have six or more legs, depending on the capacity of the tank. The support structure can either be a steel truss constructed of latticed channels or tubular steel columns. Some early examples may utilize riveted construction, but later ones utilize welded construction. Some may use a combination of the two – a riveted support structure and a welded tank. Toro-spherical water towers were the most popular type of large capacity water tower being built in the decades after World War II.

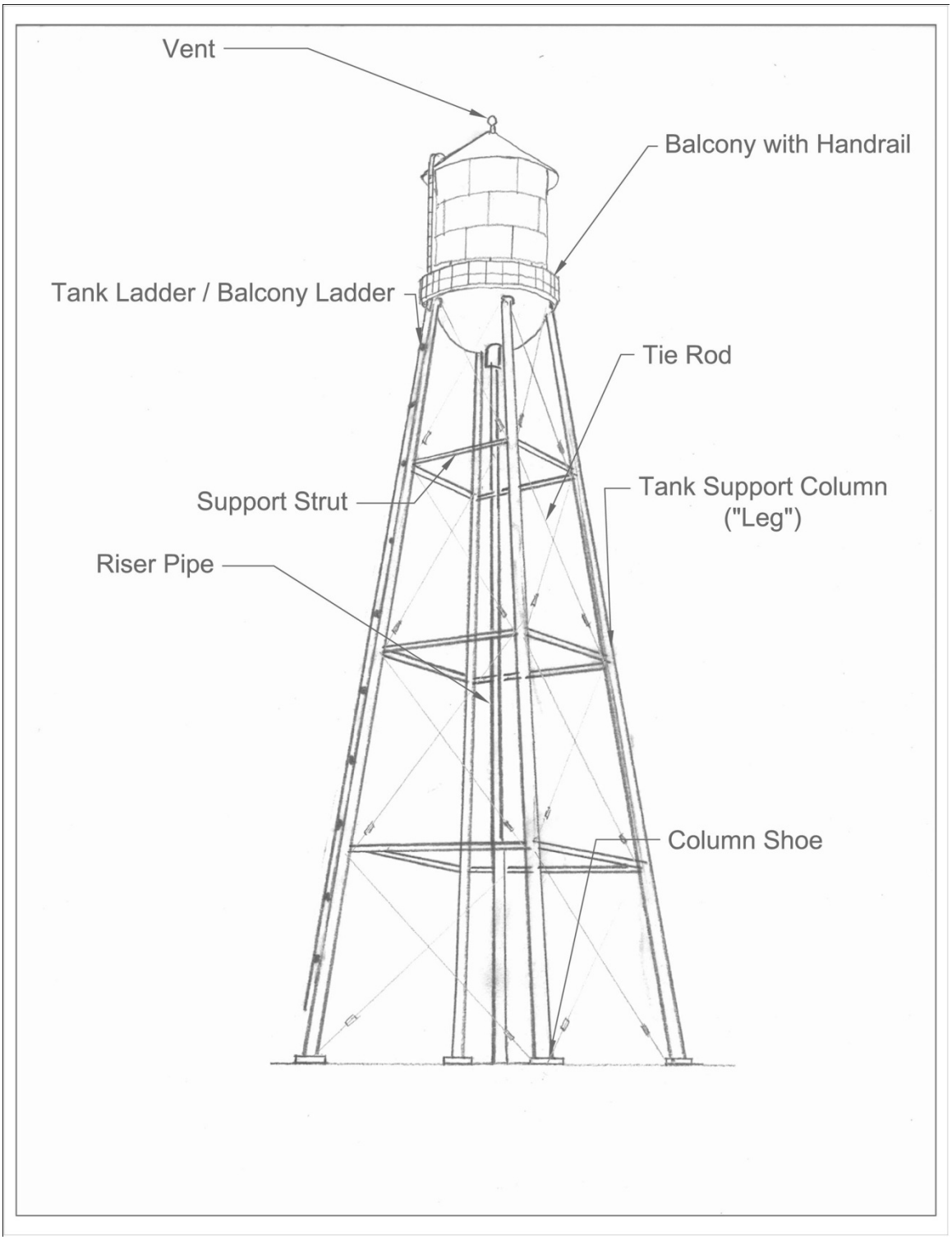

FIGURE 18. TRADITIONAL STYLE, HEMISPHERICAL BOTTOM WATER TOWER

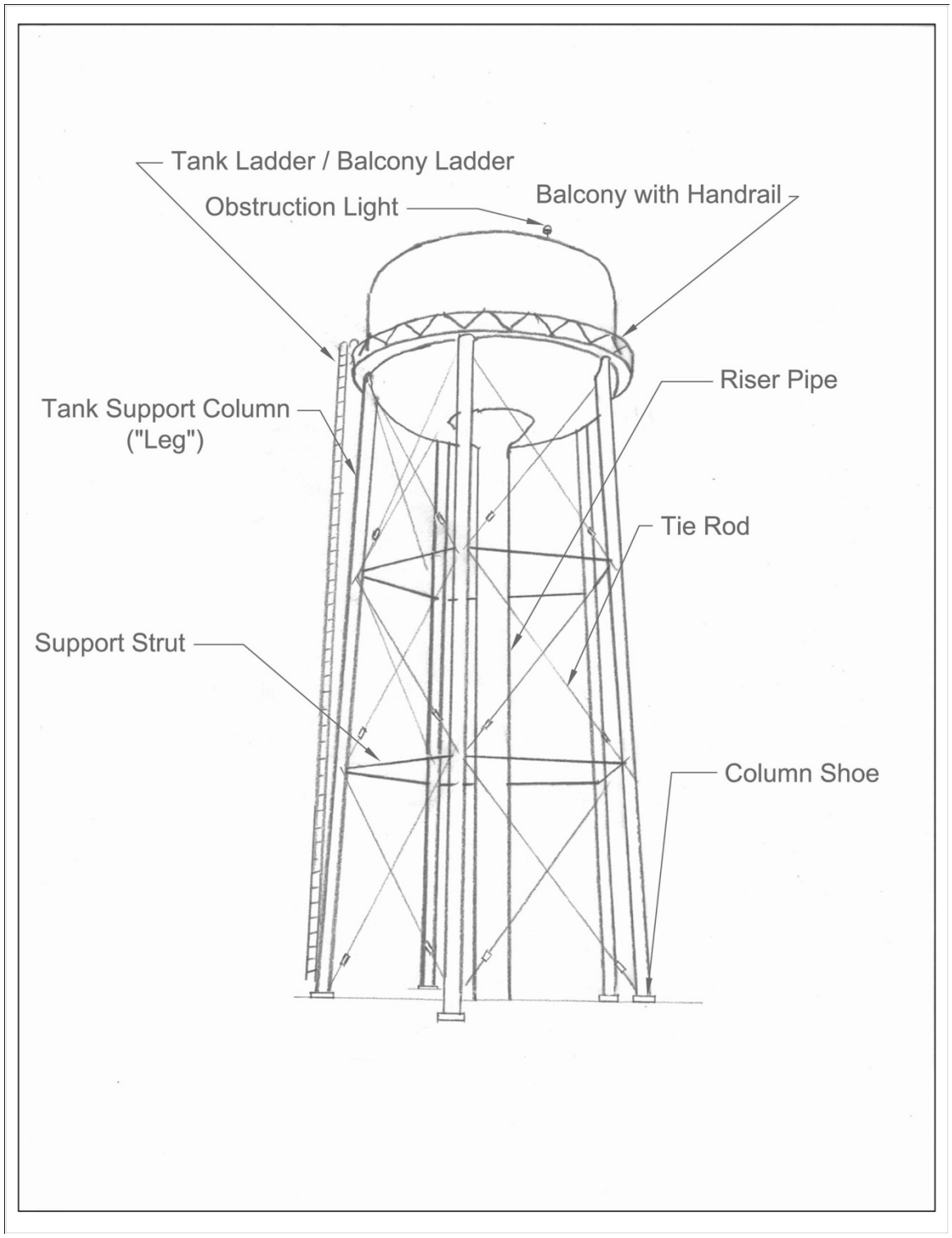

FIGURE 19. DOUBLE ELLIPSOIDAL WATER TOWER

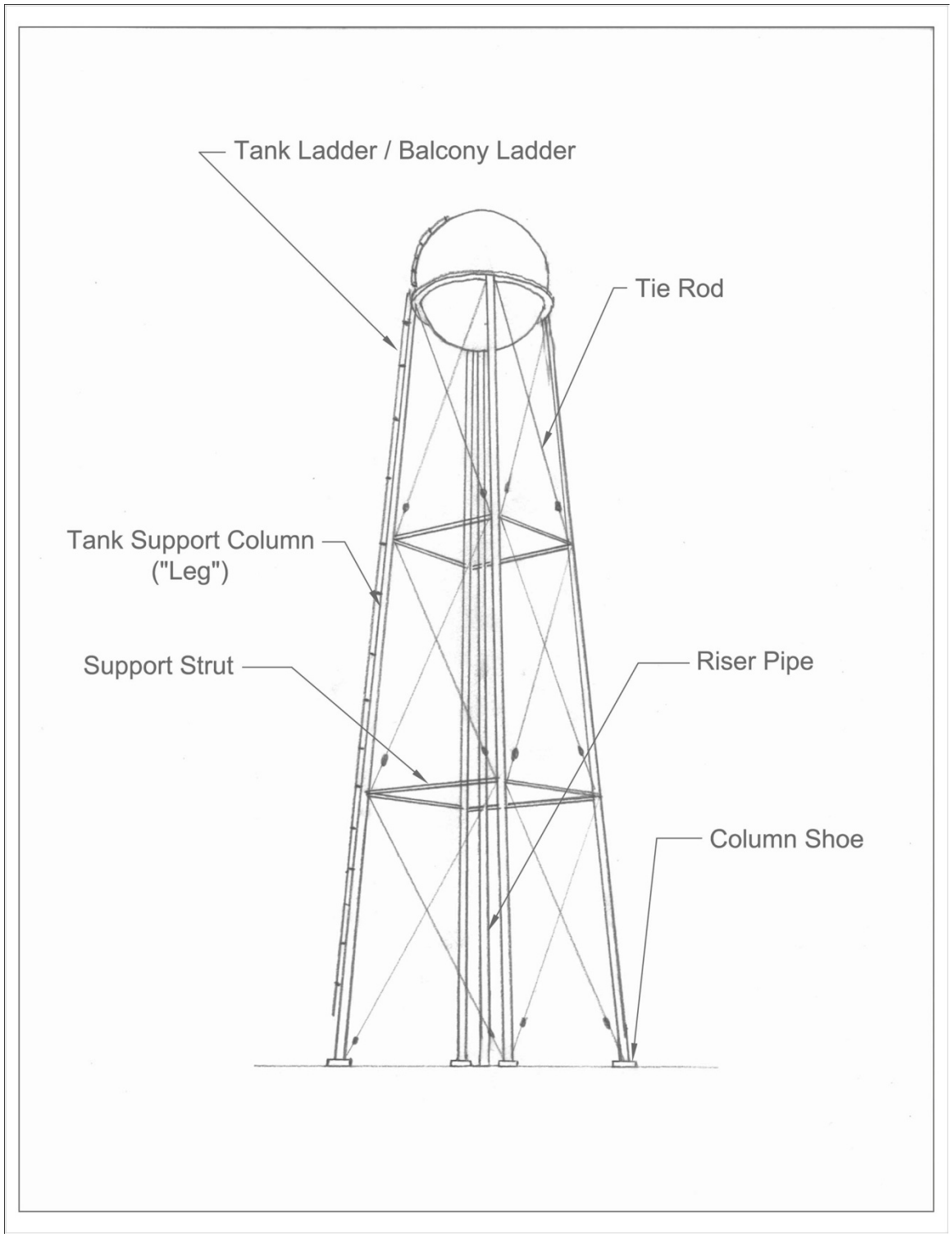

FIGURE 20. SPHERICAL WATER TOWER WITH LEGS

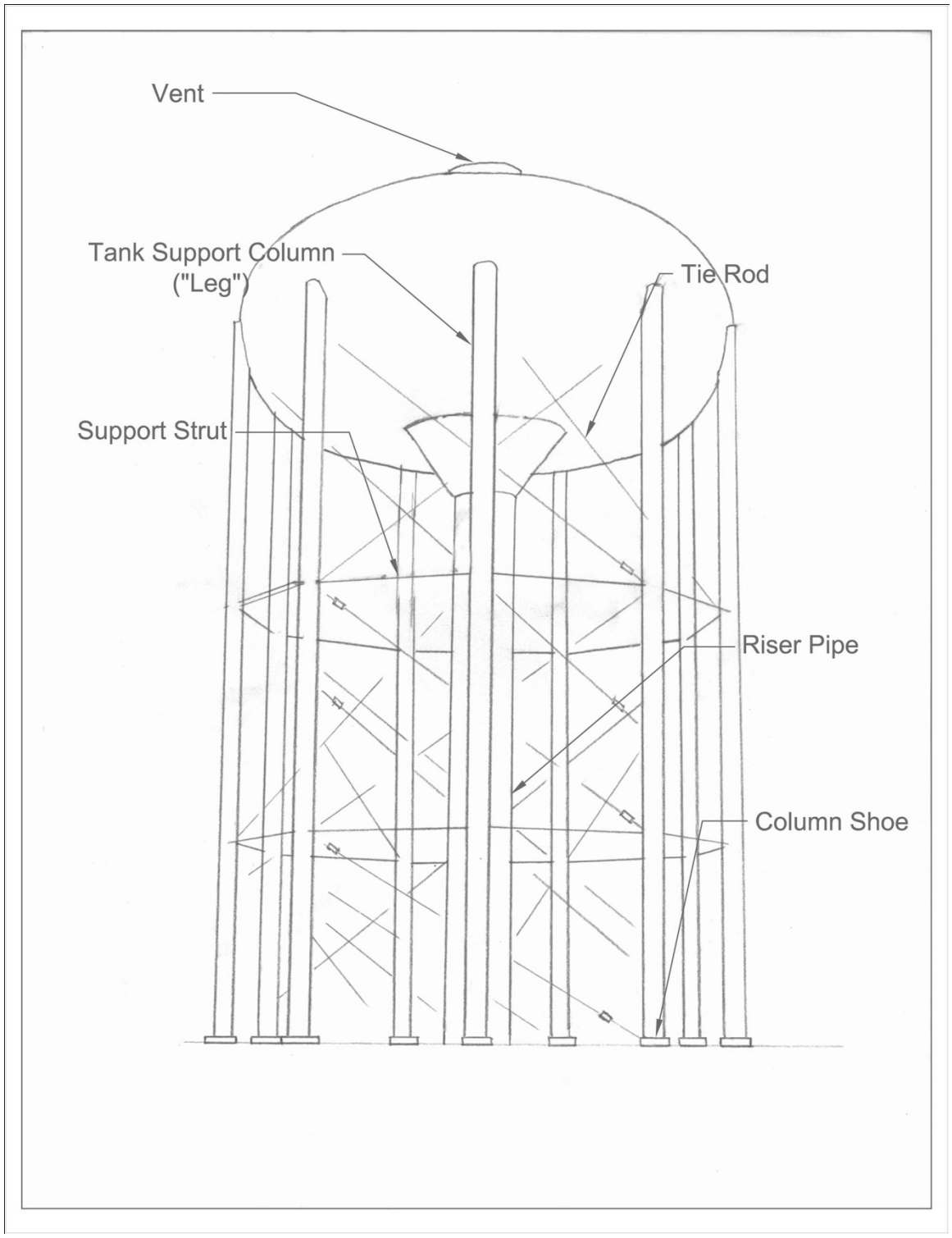

FIGURE 21. TORO-SPHERICAL WATER TOWER

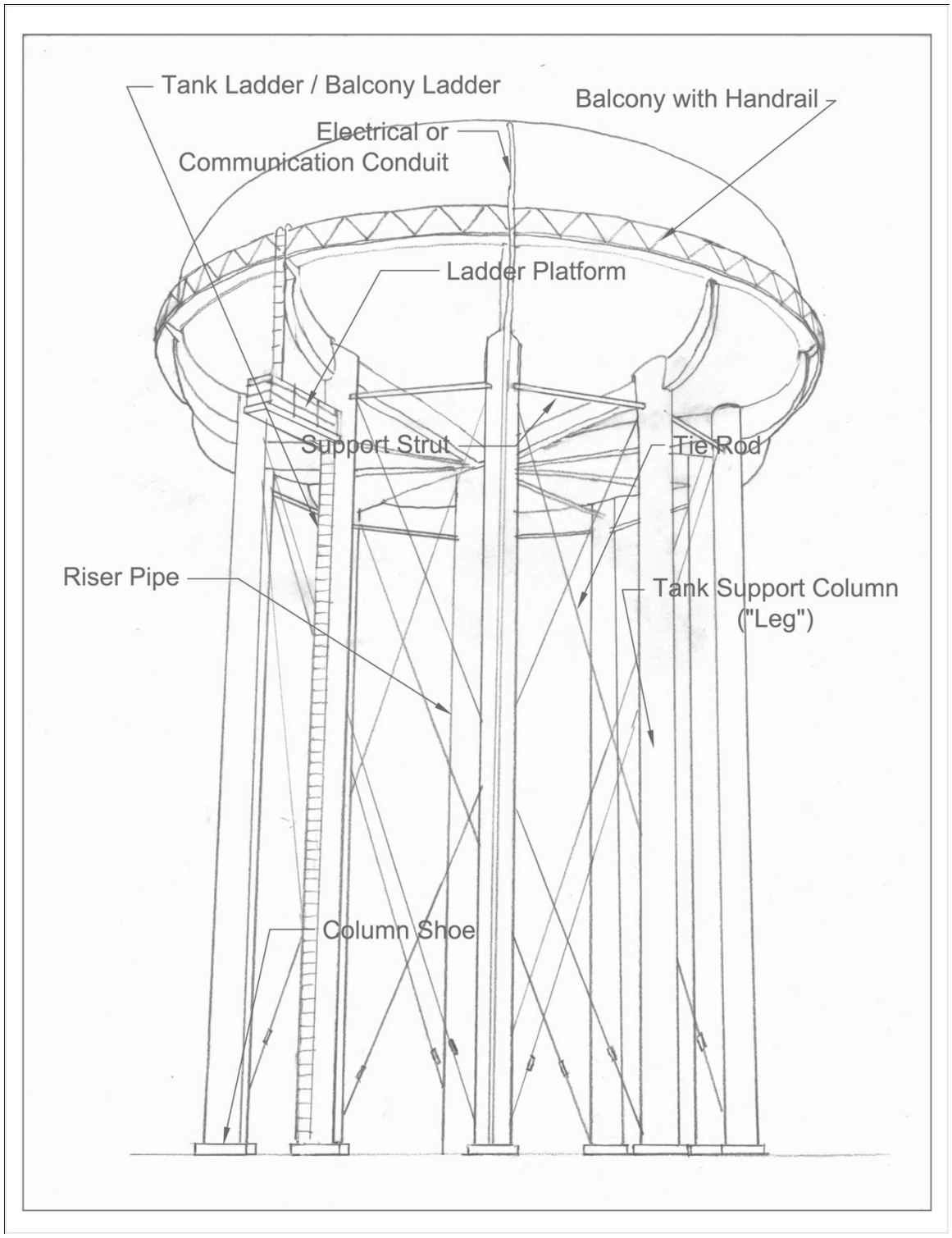

FIGURE 22. TORO-ELLIPSOIDAL WATER TOWER

3.2.2 Single Pedestal

Single pedestal water towers are structures with tanks that rest on a relatively slender single column that may or may not have a flared base. Single pedestal water towers include structures with spherical, spheroid, and hydrocone type tanks. Other related types of towers that fall under a separate category, are fluted column and composite water towers. Both of these types have tanks that rest on very large diameter pillars. Since hydrocone, fluted column, and composite water towers were developed after the period covered by this historic context study they are not included in the study. Very early single pedestal water towers had straight columns and are typically only found on with spherical tanks. Single pedestals with flared bases were introduced in the early 1940s and are the most common type of single pedestal. Single pedestals with flared bases continue to be used in the construction of water towers in the twenty-first century.

3.2.2.1 Spherical

This type of water tower is characterized by a sphere (round) tank set atop a single pedestal (Figure 23). Some early examples may have a straight-sided pedestal, but the majority have flared bases. Many have painters' rings around the bottom of the tank and modern examples may have guardrails on the top of the tank. Most have an internal ladder that is accessed by an access door on the side of the column. The builder's plate is typically located on or near this door. Typically, they have a capacity of 150,000 gallons or less, with 100,000 gallon tanks being most common. Very early examples may utilize riveted construction, which would be significant; however, most are of all-welded construction.

The first water tower with a single pedestal and a spherical tank was constructed in Longmont, Colorado in 1934. Single pedestal spherical water towers gained widespread popularity in the 1940s and were the most popular type being built during that decade. Manufacturers sold these types of towers under various trade names. Chicago Bridge & Iron sold theirs under the trade name Waterspheroid® and Caldwell sold water towers they manufactured under the name Aquaped. Given their efficiency and economy to build and maintain, these types of water towers continue to be built in the twenty-first century.

3.2.2.2 Spheroid

Spheroid water towers have flared single pedestals and are characterized by their distinctive conical shaped bottom plates and half-spherical domed roofs, giving them an appearance reminiscent of a hot air balloon (Figure 24). Invented in 1949, the first ever spheroid water tower was built by Chicago Bridge & Iron in Northbrook, Illinois in 1953. Spheroid water towers are of welded construction and many have painters' rings around the bottom of the tank. Modern examples may have guardrails on the top of the tank. Most have an internal ladder that is accessed by a door on the side of the column. The builder's plate is typically located on or near this door. Typically, they have a capacity of at least 200,000 gallons up to 500,000 gallons. Spheroid water towers were sold by different manufactures under different trade names. For example, Chicago Bridge & Iron sold their water towers under the trade

name Waterspheroid®. Given their efficiency and economy to construct and maintain, spheroid water towers continue to be built in the twenty-first century.

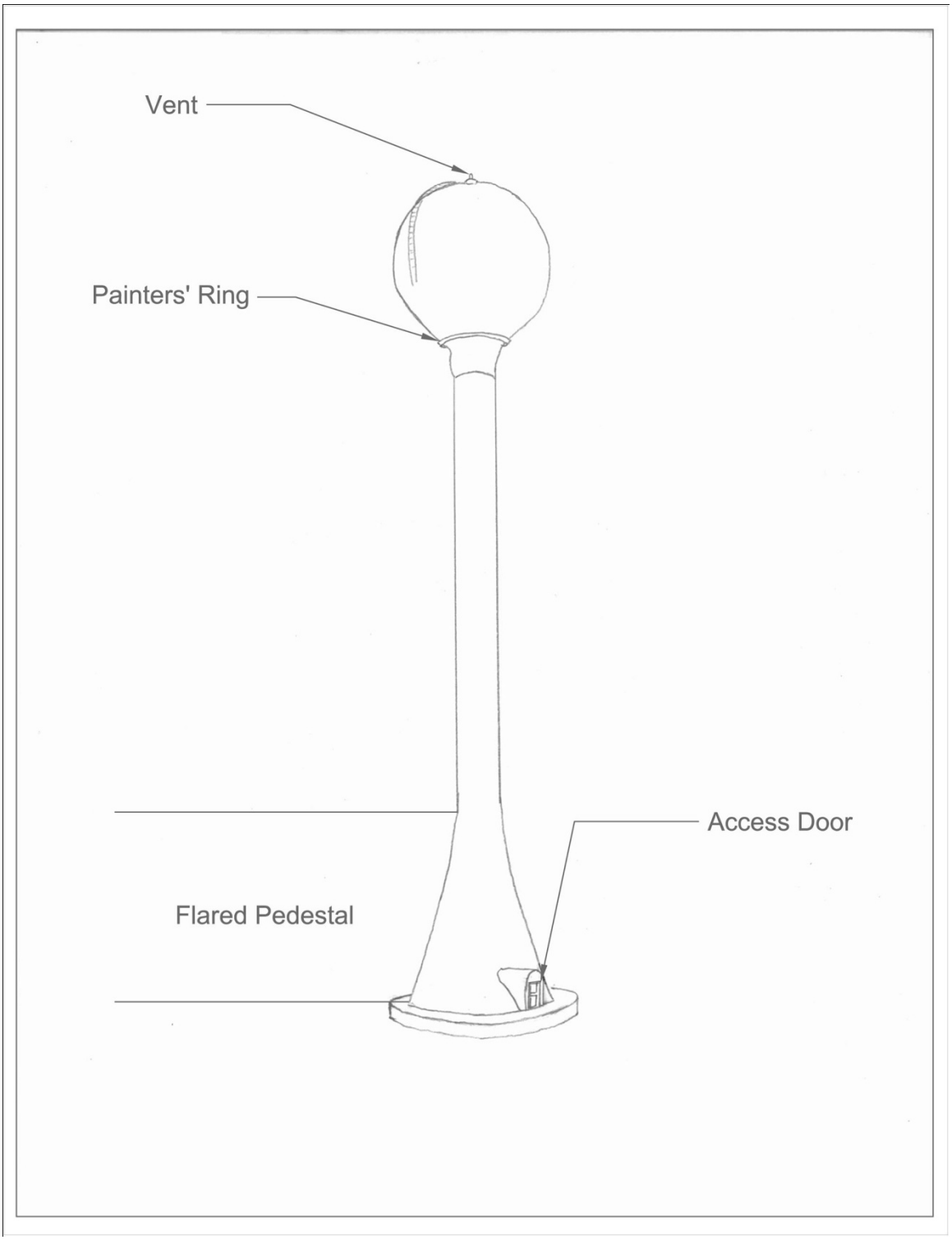

FIGURE 23. SINGLE PEDESTAL SPHERICAL WATER TOWER

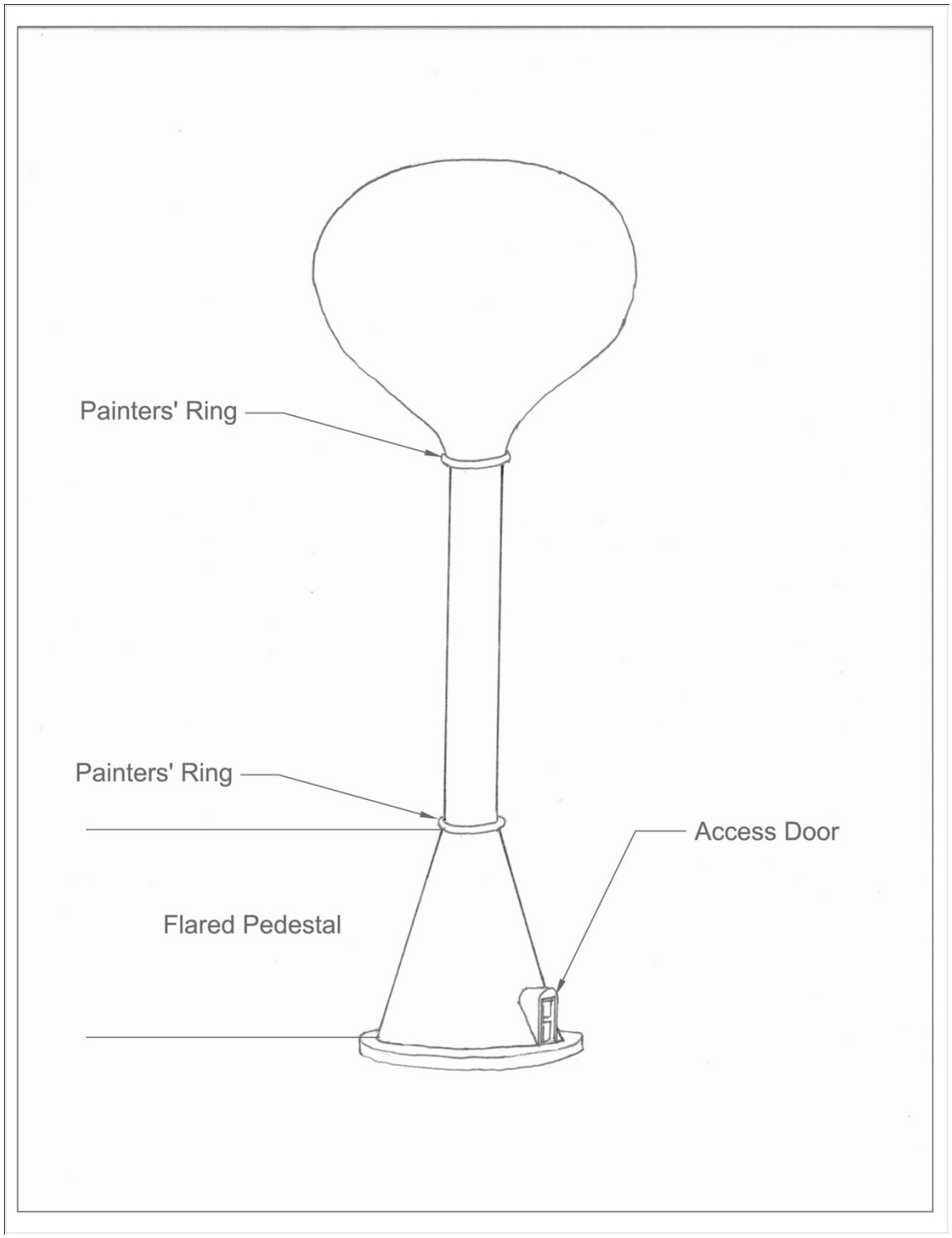

FIGURE 24. SPHEROID WATER TOWER

3.3 ALTERATIONS

There are many common alterations to water towers, some of which are required to maintain the ongoing historic use of the structure, and others are for additional new, secondary uses. Alterations often needed to maintain the historic use include alterations to or replacement of the standpipe and frost box, and repainting. Alterations and additions associated with improving safety include replacement ladders and the addition of safety cages, the additions of catwalks under the tank to provide access to the standpipe and frost box, railing additions and extensions, overflow pipes, and obstruction (aviation) lights. Often seen alterations, additions, and accretions unrelated to the historic use and safety include the addition of communication equipment. This includes emergency/ civil defense sirens and speakers such as those used to alert citizens of a severe weather or to call members of a volunteer fire department in a small town. Communications antennas are another common accretion. These fall into two categories, those associated with radio systems used by governments agencies, such as police departments to communicate, and cellular antennas installed by private companies to as part of pay-for-service cellular telephone networks.

FIGURE 25. VERMILLION WATER PLANT WITH ORIGINAL WATERWORKS AND WATER TOWER IN THE BACKGROUND (Courtesy State Archives of the South Dakota State Historical Society)

3.4 ASSOCIATED RESOURCE TYPES

There are many types of resources commonly associated with water towers. Related resources fall under two broad categories: those that are associated with the water system, and other civic resources. Municipal water systems typically have four key components: a source of supply, a pipeline or aqueduct to carry the water from the source to the city or town, treatment and purification facilities, and a distribution network (Hayes 2005:75). Water system related resources most commonly found near water towers are pump houses, treatment plants, filtration plants, and water works (Figures 25-27). A water works may include several of these components. Other resources associated with the water system that are present, but not visible include below ground pipelines (if there is no pump onsite) and

FIGURE 26. ORIGINAL VERMILLION WATER WORKS (Courtesy State Archives of the South Dakota State Historical Society)

water mains. Other types of commonly associated civic resources include city and town halls, fire stations, public works facilities such as maintenance garages, public utilities such as combined power plants and water works. Although not a structure, city parks are also commonly associated with water towers. In the instance of parks, water towers are often located near the center or one end of the park. Some or all of these types of resources may be present near a water tower and should be documented when a water tower is surveyed. However, these resources are not evaluated in this context.

FIGURE 27. FILTRATION PLANT, LAKE KAMPESKA, WATERTOWN (Courtesy State Archives of the South Dakota State Historical Society)

3.5 REGISTRATION REQUIREMENTS

Properties that may be eligible for the National Register of Historic Places under this historic context include steel water towers constructed in South Dakota between 1894 and 1967 that are associated with municipal water systems. Water towers may be constructed either for fire protection purposes, or for providing a reliable source for potable water, or both to be considered under this historic context.

Steel water towers associated with water systems may be eligible for the National Register of Historic Places under Criteria A and/or C. Typically a water tower will not be eligible under Criteria B or D within this context. The following registration requirements should be used to evaluate the eligibility of steel water towers associated with drinking water systems under this context:

1. To be eligible for the National Register under Criterion A, a water tower must be associated with an event or events that have made a significant contribution to broad patterns of American history, the history of South Dakota, or local history.

    a. To be eligible in the area of Community Planning and Development a water tower must be associated with the initial development of a water works or water system in a city or town; or a substantial upgrade, expansion, or improvement of the system; or improved living conditions and standards in a community.

        i. If a water tower is the first constructed for a water system in a municipality, it will be significant at the local level.

        ii. Steel water towers built in the late nineteenth and early twentieth century to replace wood water towers and tanks are significant at the local level for their embodiment of civic improvements. Many cities and towns late nineteenth

and early twentieth century first built wood water towers or tanks; however, these structures had relatively short life expectancies, so the steel towers that replaced them reflect efforts to develop more permanent infrastructure, lower maintenance costs, reduce fire risks, and convey a sense of permanence and modernity to attract development.

iii. A water tower associated with a significant event, such as the population booms many cities and towns experienced after World War II, would be significant at the local level for its embodiment of expanding government services to meet the needs of a growing community (a historically significant developmental period).

iv. A steel water tower built to replace an earlier steel water tower either because the earlier one failed or it no longer met the needs of a city or town, it would not be eligible for the National Register under Criterion A for this reason alone. For example, if a city or town outgrew the capacity of the earlier structure over a long period, such as several decades, the replacement tower may only represent the continued development of a water system to keep pace with the ongoing growth of a community over time. This is different from significance described under Registration Requirement 1.a.iii, where a water tower may have significance for its embodiment of a significant event, such as a very specific and important developmental period of a city or town.

b. Federal Relief Construction, 1929-1941

Registration requirements for public utilities such as water works and water towers associated with federal relief programs during the period 1929-1941, have been previously outlined in the "Federal Relief Construction in South Dakota, 1929-1941" *National Register Multiple Property Documentation Form* for (Dennis 1998b) and in the historic context study: *Federal Relief Construction in South Dakota, 1929-1941* (Dennis 1998a). Within this subcontext, water towers will be significant at the local level. To determine if a water tower associated with a water system is eligible for the National Register for its association with federal relief efforts the following criteria should be applied:

i. The water tower must have been financed (wholly or in part) by the federal government under the auspices of one of the federal relief programs that carried out engineering, construction, or conservation efforts in South Dakota. The funds should have been utilized for design, materials, labor, or supervision.

ii. Construction should have been substantially completed by 1941.

iii. The engineer designing the system normally determined the height, capacity, and type of water tower required by a water works or water system, but the manufacturer often provided the actual tower design. For this reason, unlike other construction by federal relief programs, water tower aesthetics were not substantially influenced by federal relief programs. Therefore, water

towers are not eligible for the National Register under Criterion C for their association with federal relief programs. However, they still may be eligible under Criterion C based on their design or builder.

2. Water towers may be eligible under Criterion C either for their design, or for their association with a manufacturer or engineer, or both.

   a. A water tower is eligible for the National Register for its design in the area of engineering if it meets one of the following criteria.

      i. In many cities and towns in South Dakota, water towers are the most prominent visual landmark in the community and largest designed resource. As such, water towers are significant at the local level for its embodiment of distinctive design, or high artistic value within a city or town.

      ii. A steel water tower is eligible for the National Register at the state level if it exhibits outstanding or unique design characteristics (e.g. innovative or high artistic value), or if it is a rare example of a particular water tower type of style. For example, the first ever example of a particular water tower type in South Dakota would have statewide significance for ushering into the state a new type of resource. For example, the first spherical style water tower with a single pedestal support structure in South Dakota appears to have been built in Pollock in 1955 (CA00000537) and would be significant at the state level for introducing a new water tower style to the state, which was later used for water towers constructed across the state in ensuing decades.

      Similarly, a water tower that is one of a kind, one of only a few of a particular type, or one that exhibits a distinctive design characteristic not common in South Dakota, such as arced legs on the support structure, would also have statewide significance. For example, the water tower constructed in Mobridge in 1912 (WW00000064), is one of only a few water towers in the state that has support structure with arched legs. This type of support structure as an early, distinctive, and now exceedingly uncommon type of support structure. For this reason, this water tower is significant for the distinctive design of its support structure.

      iii. Standard plan water towers are eligible for the National Register since standard designs of manufacturers were integral to the development of water systems in South Dakota. Standard plans reduced design costs for these otherwise very complex structures. In addition, since many models were mass-produced by the larger manufacturers, this reduced fabrication costs and made water towers more affordable for even small communities.

   b. A water tower can be eligible for the National Register in the area of engineering or innovation for its association with the work of a master if it meets the following criteria:

i. A water tower will be eligible at the state level if it was manufactured or built by a water tower manufacturer or another entity not well represented in South Dakota, or who did not produce large amounts of water towers. For example, the Utica Municipal Water Tower (YK00000949) is significant as one of only two known extant water towers in South Dakota designed and manufactured by the Omaha Structural Steel Works.

ii. Water towers manufactured by a large water tower manufacturer well represented in South Dakota may be eligible at the local level if it is the only work by the manufacturer in a city or town. If the water tower also embodies a significant innovation by the builder, or led to other advancements in South Dakota, it may be eligible at the state level.

c. A water tower may be eligible for the National Register of Historic Places if represents the work of a significant engineer, not a manufacturer, who is a master. To meet this criteria the engineer must be distinguishable among from others by their characteristic style and quality. The water tower must also be a distinctive work of the engineer, or embodies a particular phase in the development of the master's career. The water tower must embody either a technical achievement of the engineer in terms of structural design, or a particular aesthetic achievement, or both. For example, water towers designed by significant South Dakota engineers, and which epitomize a distinctive period in the career of the engineer, meet this requirement,

   Although standard plan water towers may have been designed by a significant engineer such as George T. Horton, they do not meet this requirement because they were not specifically designed by the engineer for a particular location. .

3. To be eligible for the National Register of Historic Places a water tower must possess sufficient integrity to convey its significance. A water tower will need to posses at least several aspects of historic integrity to be eligible for the National Register of Historic Places. See Section 3.6 for additional guidance on evaluating integrity.

3.6 INTEGRITY

The National Register defines integrity as the *ability of a property to convey its significance*. To be eligible for the National Register of Historic Places, a property must not only be significant, it must also possess sufficient integrity to convey its significance.

There are seven aspects of integrity: location, design, setting, materials, workmanship, feeling, and association. A property must maintain at least some, if not most, aspects of integrity in order to be eligible for the National Register. Which aspects are most important will depend on the significance of a particular property and must be considered on a case-by-case basis.

Location: To be eligible for the National Register a water tower must retain its integrity of location. Typically, a water tower must be in its original location in order to retain its integrity of location. The only exceptions are:

- If the movement of a water tower is associated with an event that would have significance under Criterion A. If a water tower is moved, the move must also be related to maintaining the historic use and function of the water tower. For example, if a water tower was moved as part of the relocation of a town to accommodate the creation of Lake Oahe, this move would be associated with an event that may have significance under National Register Criterion A, thus the water tower would retain sufficient integrity of location for its association with this event. If a water tower was built by one city or town and later acquired by another in order to develop a water system, the water tower would retain its integrity of location for its association with the development of a water system by the second community. The water tower would not retain its integrity of location for its association with the town where it was originally built.

- If a moved water tower is significant under Criterion C for its embodiment of a distinctive type, design, method of construction, or high artistic value; or if it represents the work of a unique or rare manufacturer who is not well represented in the State of South Dakota. If a moved water tower is significant for one of these reasons, the structure must retain its integrity of design, materials, workmanship, feeling, and association. Moved water towers that have significance under National Register Criterion C must also meet Criteria Consideration B for moved properties as described in National Register guidelines.

Design: A water tower must retain a sufficient level of design integrity to be eligible for the National Register. At a minimum, a water tower must possess its original support structure and tank. Without both features present, a water tower cannot be eligible for the National Register. Water towers that have balconies must also retain their original railing.

Beyond tank replacement, most other alterations are relatively superficial, typically reversible, and do not significantly affect the design integrity of water towers. Repainting is an important maintenance procedure, and one that is easily changed. Therefore, a water tower need not possess its original paint and color scheme to maintain its integrity of design. Additions, accretions, and replacement features such as safety cages, catwalks and platforms under the tanks, and alterations and/or replacement of standpipes are often required to maintain the on-going historic use of a water tower and are minor features that do not compromise the ability of a water tower to convey its integrity of design. Other additions and accretions such as aviation lighting and communications equipment, including sirens, antenna, and cellular communications equipment (e.g., antennas and cables) may have been added at various times, sometimes within the period of significance. Typically, the addition of these features will not compromise the ability of a water tower to convey its integrity of design; however, their application can result in cumulative effects, so a case-by-case analysis may be required to determine if substantial additions of these features compromise the integrity of design.

Setting: Setting refers to the physical environment in which a historic water tower is located. This can include topography, vegetation, simple manmade features, such as fences and paths, and the relationship between buildings, structures, other features, and open space. Given their physical size and visual prominence, water towers often dominate their settings. Therefore, water towers need only retain a minimal level of integrity of setting to be eligible for the National Register. Since most water towers that fall within this context are located within, or on the outskirts of a town or city, they need only retain this relationship with a community to maintain their integrity of setting. A compromised setting is not a sufficient reason to determine a water tower ineligible for the National Register.

Materials: A water tower must possess a sufficient level of material integrity to be eligible for the National Register. Materials are the physical elements that were combined during construction, and any subsequent significant episodes, to create the water tower. To be eligible for the National Register a water tower must retain the majority of the original materials used to build the support structure and tank. Any replacement materials on the support structure and tank must match the original material in-kind. Because frost boxes, standpipes, and risers often require repair and/or replacement to facilitate the continued historic use of water towers, particularly legged towers, replacement materials for these features shall not be sufficient grounds to determine a water tower ineligible for the National Register.

Workmanship: This refers to the physical evidence of the crafts of a particular people during a given period in history. Special skills and equipment were required to construct water towers; therefore, highly skilled crews provided by water tower manufacturers built most water towers through the mid-twentieth century. The workmanship of these crews is manifested in the materials they used to assemble the water tower, which may include rivets or welded seams used to assemble the structure, depending on when the water tower was built. In the case where a tower was originally constructed with rivets and the seams on the tank were later welded to control leaks, the rivets must remain in place to convey historic workmanship.

Feeling and Association: Normally, a water tower will retain integrity of feeling and association if it retains its other aspects of integrity. At a minimum, under Criterion C, a water tower must retain its integrity of design, materials, and workmanship to retain its integrity of feeling and association. Under Criterion A, a water tower must also retain its integrity of location and some integrity of setting, at least in terms of its physical relationship to the community in which it is located.

4.0 CONCLUSION

The purpose of this historic context study is to provide a framework for identifying, evaluating, and protecting all-steel water towers associated with drinking water systems in the state of South Dakota constructed during the period 1894-1967.

Water towers and water systems are integral to the growth and development of South Dakota. They are still being constructed, and will continue to be built, across the state well into the future. For this reason, it was important to identify a cutoff limit for this study. While the National Register excludes properties that are less than 50 years of age unless they are of exceptional importance, consideration was given to a logical cutoff for the study based on historic development patterns and trends. Although less than 50 years in the past, the year 1967 was chosen since ensuing years correspond with major changes in the development of water systems in South Dakota, and also in the types of water towers that are being built in the state.

In the future, it is recommended that additional studies be done to document and evaluate the significance of rural drinking water systems in South Dakota. The first rural water system in the state went online in 1967 and many additional systems went online in subsequent years. These systems represent efforts to comply with federal standards and provide safe drinking water to all South Dakotans. Because of their potential far-reaching impact across the entire state, a historic context should be prepared for these systems as they near 50-years of age to determine their significance and provide criteria for evaluating associated resources, including water towers.

A study of water tower types and styles that postdate this historic context study should be done in the future as they approach 50 years of age to provide a framework for their identification and evaluation. In the early 1960s, fluted column (pillar) style water towers were invented and the first one was constructed in South Dakota in 1969. Over the next two decades, hydrocone and composite water towers were invented and began to appear across the state. These types of water towers, along with sphere and spheroid water towers became the prevalent types of water towers built in the late twentieth and early twenty-first centuries. As these structures start to reach 50 years in age, it is recommended that they be surveyed and evaluated as a group to determine their eligibility for the National Register.

A broader study of resources associated with water towers is also recommended. A water tower is only one part of a larger system. Water systems include water wells; pipelines and aqueducts to carry water from the source supply to the city; pumping stations; storage structures, such as water towers and tanks, standpipes, ground based tanks, and reservoirs; treatment and purification facilities, including filtration, treatment, and softening plants; and a distribution network, including water mains, distribution lines, and hydrants. Further study is recommended to develop a greater understanding of these systems, identify associated property types, and provide a framework for identifying and evaluating their significance. In addition, further study is recommended to develop a better understanding of the significance of the relationships between water towers and their sites. Water towers are often located on the same site as other water system facilities, such as water plants, well/pump houses, and filtration plants; they are often found in city parks; and they are commonly located adjacent to other civic structures, such as city and town halls, fire stations, and public works facilities,

such as maintenance shops. Starting in the late 1950s, greater emphasis began to be placed on the design of water tower sites and further study is needed to determine if and how evolving site-planning principals may have influenced site designs for water towers.

Looking beyond the identification and evaluation of water towers under this context, efforts should be made to preserve and protect these iconic historic resources. Protection initiatives may include nominating eligible water towers to the National Register of Historic Places or designating them as local landmarks in municipalities having historic preservation commissions. Equally important is continued maintenance of these structures to ensure their long-term preservation. Prior to performing physical maintenance, the preparation of a historic water tower management plan is recommended to ensure that historic water towers will be properly maintained and retain their eligibility for the National Register. A management plan will document the significance of the water tower and its character defining features, examine its existing conditions and provide recommendations for restoration and on-going maintenance, and provide estimated costs.

5.0 BIBLIOGRAPHY

American Water Works Association. *Water Works Practice: A Manual*. Baltimore: Williams & Wilkins, 1926.

———. *Water Works Practice: a Manual Issued by the American Water Works Association*. Baltimore: Williams & Wilkins, 1929.

Anderson, Lloyd E. Elevated Storage Tank. U.S. Patent Design 197,264, filed September 11, 1962, and issued December 31, 1963.

Anfinson, John. A Crude and Imperfect Affair: The Origins of Water Supply and Waste Disposal in the Twin Cities. Paper. National Park Service: Mississippi National River and Recreation Area, 2010.

Blackburn, Bryan M. Elevated Tank. U.S. Patent 1,947,515, filed September 21, 1933, and issued February 20, 1934.

———. Oval Elevated Storage Tank. U.S. Patent 1,997,808, filed October 7, 1933, and issued April 16, 1935.

———. Elevated Storage Tank. U.S. Patent 2,657,819, filed October 25, 1950, and issued November 3, 1953.

Baker, M. N. *The Manual of American Water-Works*. New York: Engineering News, 1888.

———. *Manual of American Water-Works 1897*. New York: Engineering News Publishing, 1897.

———. *Municipal Year Book, 1902 ... with Summaries and Editorial Discussion*. New York: Engineering News Publishing, 1902.

———. *Municipal Engineering and Sanitation*. New York: The Macmillan Company, 1906.

———. *The Quest for Pure Water; the History of Water Purification from the Earliest Records to the Twentieth Century*. New York: American Water Works Association, 1948.

Bass, Frederic. "A Suggestion in Regard to State Control in the Design of Small Water Works." *Journal of the American Water Works Association* 6 (1893) 832-333.

Bensman, David, and Mark R. Wilson, eds. "Iron and Steel." *Encyclopedia of Chicago*. University of Chicago Press, 2004.

Caldwell, William E. Tower. U.S. Patent 487,902, filed May 26, 1892, and issued December 13, 1892.

Chicago Bridge & Iron. "History." 2012. http://www.cbi.com/about-cbi/history.

Chicago Bridge & Iron Works. *Fire Protection*. Chicago: The Works, 1929.

Croes, John James Robertson. *Statistical Tables from the History and Statistics of American Water Works ... Compiled from Special Returns*. New York: Engineering News, 1883.

———. *Statistical Tables from the History and Statistics of American Water Works*. New York: Engineering News, 1885.

———. *Statistical Tables of American Water Works*. New York: Engineering News, 1887.

Dennis, Michelle L. *Federal Relief Construction in South Dakota, 1929-1941*. Pierre, SD: South Dakota State Historic Preservation Office, 1998a.

———. "Federal Relief Construction in South Dakota, 1929-1941." *National Register of Historic Places Multiple Property Documentation Form*. Washington DC: Department of the Interior, National Park Service, 1998b.

Derry, Anne, and Patricia Parker. *Guidelines for Local Surveys: a Basis for Preservation Planning*. Washington, DC: National Register of Historic Places, Interagency Resources Division, National Park Service, Department of the Interior, 1992.

Dubie, Carol Ann. *The History of American Watertowers and Their Place in the American Landscape*. Paper presented at the 1979 S.A.I. Conference, 1979.

———. *The Architecture and Engineering of Elevated Water Storage Structures: 1870-1940*. Thesis (M.A.)--George Washington University, 1980.

Engineering News. "The Steel Skeleton of High Buildings." *Engineering News* 26 (December, 1891) 12: 560.

Foster, Jim, and Rich Lundgren. *Towering Over America: An Illustrated History of Pitt-Des Moines, Inc*. Pittsburgh, PA: Pitt-Des Moines, Inc, 1992.

Harrison, Ronald, and Paul M. Emery. "Architectural Treatment for Water Utility Structures." *Journal- American Water Works Association* 52 (1960) 2:180-190.

Harvard Business School, Lehman Brothers Collection – Contemporary Business Archives. *Jones & Laughlin Industries, Inc.* 2012. http://www.library.hbs.edu/hc/lehman/chrono.html?company=jones_laughlin_industries_inc.

Haskew, George M., Jr. "Storage Tank Location." *Journal- American Water Works Association* 55 (1963) 3:296-302.

Haug, Jason (revisor) et al., *South Dakota Historic Resource Survey Manual*. Pierre, SD: South Dakota State Historic Preservation Office, 2006.

Hayes, Brian. *Infrastructure: a Field Guide to the Industrial Landscape*. New York: W.W. Norton, 2005.

Hoffbuhr, Jack W. "125 Years-Fulfilling the Mission." *Journal- American Water Works Association* 98 (2006) 3: 8-15.

Horton, George T. Water-Tank. U.S. Patent 857,626, filed March 6, 1905, and issued June 25, 1907.

———. Tank. U.S. Patent 1,844,854, filed April 18, 1929, and issued February 9, 1932.

Hufstetler, Mark, and Michael Bedeau. *South Dakota's Railroads: An Historic Context*. Pierre, SD: South Dakota State Historical Society, 1998.

Imberman, Eli Woodruff. *The Formative Years of Chicago Bridge & Iron Company*. Thesis (Ph. D.)--University of Chicago, 1973.

Jackson, William H., and Berkley M. Moss. Water-Tower. U.S. Patent 572,579, filed November 1, 1895, and issued December 15, 1896.

James, William. A Historical Perspective on the Development of Urban Water Systems. Last revised January, 1998. http://www.soe.uoguelph.ca/webfiles/wjames/homepage/Teaching/437/wj437hi.htm#historyWS.

Karolevitz, Robert F. *Yankton: A Pioneer Past*. Aberdeen, SD, North Plains Press, 1972.

Leach, Donald A. "Progress in the Design of Elevated Steel Tanks." *Journal- American Water Works Association*. 39 (1947) 7:651-658.

Library of Congress. *Northern Great Plains, 1880-1920: Farm Machinery Companies*. 2012. http://memory.loc.gov/ammem/award97/ndfahtml/paz_co.html.

Marson, A. "The Elevated Water Tower of Iowa State Agricultural College." *Engineering News* 9 (June 1898):372.

Mathews, Everett R. "Supply and Treatment Problems in South Dakota." *Journal- American Water Works Association* 34 (January, 1942): 749-755.

Mathis, Greg. *Architectural Survey of South Dakota Water Towers: a Reconnaissance and Intensive Survey of South Dakota*. St. Paul, MN: The 106 Group, 2011.

McDowell, Alexa. "Elk River Water Tower." *National Register of Historic Places Nomination*, 2012.

Miller, Clarence D., and John N. Pirok. Elevated Storage Tank. U.S. Patent 2,961,118, filed October 2, 1958, and issued November 22, 1960.

Minneapolis Steel and Machinery Co. *Water Towers and Tanks, Pumping Stations*. Minneapolis, MN: Minneapolis Steel and Machinery, 1910.

Moody, G.C., Bartlett Tripp, and James M. Brown. *The Revised Codes, 1903, State of South Dakota: Comprising the Political Code, Civil Code, Code of Civil Procedure, Probate Code, Justices Code, Penal Code and Code of Criminal Procedure*. Pierre, SD: Hipple Printing, 1903.

The Morning Call. *Forging America: the Story of Bethlehem Steel*. Allentown, PA: The Morning Call, 2003.

The New York Times. "Jones-Laughlin Steel to be Reorganized." December 6, 1922.

Nighters, Dale. *From Dell Rapids' Attic: A History of Dell Rapids, South Dakota*. Dell Rapids, SD: Dell Rapids Society for Historic Preservation, 2005.

———. "Fire and Water: A History of Madison's Early Waterworks". *The Heritage Herald* 27 (2007):4-7,10.

Pittsburgh-Des Moines Steel Company. *Steel Water Tanks for Public Service*. Pittsburgh, PA: The Company, 1915.

Rajagopalan, K. *Storage Structures*. Rotterdam: A.A. Balkema, 1990.

Rogers, Stephen C., and Lynda B. Schwan. *Architectural history in South Dakota*. Pierre, SD: South Dakota State Historic Preservation Office, 2000.

Schell, Herbert S. *History of South Dakota*. Lincoln, NE, University of Nebraska Press, 1961.

South Dakota. *Enabling Act and Constitution and the Laws Passed by the Thirteenth Session of the Legislature of the State of South Dakota: Begun and Held at Pierre, the Capital of Said State, on Tuesday, the Seventh Day of January, 1913, and Concluded March 7th, A. D. 1913*. Sioux Falls, SD: Brown & Saenger, 1913.

South Dakota Department of Health. *Report of the Department of Health of the State of South Dakota for the Years 1905 and 1906*. Huron, SD: Huronite Printing, 1906.

South Dakota State Board of Health. *Second Annual Report of the State Board of Health of South Dakota*. Pierre, SD: Free Press, 1890.

———. *Report of the State Board of Health of South Dakota for the Years 1893-1894*. Sioux Falls, SD: Brown & Saenger, 1894.

———. *Biennial Report of the State Board of Health of South Dakota for the Years 1901-1902*. Aberdeen, SD: News Printing, 1902.

———. *Biennial Report of the State Board of Health of the State of South Dakota: 1908-1910*. Sioux Falls, SD: Mark D. Scott, Printer and Binder, 1910.

———. *Fourth Biennial Report of the State Board of Health, Including Division of Venereal Diseases, Division of Public Health Nursing, State Health Laboratory, and County Boards of Health*. Madison, S.D.: Daily Leader, 1920.

———. The *Fifth Biennial Report of the South Dakota State Board of Health, Including Division of Vital Statistics, Division of Epidemiology, Division of Child Hygiene, Division of Sanitary Engineering, Division of Education and Publicity, Division of Records and Accounts, Division of Medical Licensure, and the State Health Laboratory*. Pierre, SD: State Publishing, 1922.

———. *Tenth Biennial Report of the South Dakota State Board of Health, Including Division of Vital Statistics, Division of Child Hygiene, Division of Epidemiology, Division of Sanitary Engineering, Division of Records and Accounts, Division of Medical Licensure, and the State Health Laboratory*. Pierre, SD: State Publishing, 1932.

———. *Eleventh Biennial Report of the South Dakota State Board of Health, Including Division of Vital Statistics, Division of Child Hygiene, Division of Epidemiology, Division of Sanitary Engineering, Division of Records and Accounts, Division of Medical Licensure, and the State Health Laboratory*. Pierre, SD: State Publishing, 1934.

———. *Twelfth Biennial Report of the South Dakota State Board of Health, Including Division of Administration, Division of Epidemiology, Division of Sanitary Engineering, Division of Child Hygiene, Division of Crippled Children, Division of Vital Statistics, Division of Medical Licensure, State Health Laboratory, Division of Records and Accounts*. Sioux Falls, SD: Smith & Co., 1936.

———. *Thirteenth Biennial Report of the South Dakota State Board of Health, Including the Division of Administration, Division of Epidemiology, Division of Sanitary Engineering, Division of Child Hygiene, Division of Crippled Children, Division of Statistics and Records, Division of Vital Statistics, Division of Medical Licensure, State Health Laboratory, Division of Records and Accounts*. Pierre, SD: South Dakota, 1938.

———. *Fourteenth Biennial Report of the South Dakota State Board of Health, Including the Division of Administration, Division of Epidemiology and Venereal Disease Control; Division of Sanitary Engineering; Division of Maternal and Child Health, and Crippled Children; Division of Vital Statistics; Division of Medical Licensure; State Health Laboratory; Division of Records and Accounts*. Pierre, SD: South Dakota, 1940.

———. *Fourteenth Biennial Report of the South Dakota State Board of Health, Including the Division of Administration, Division of Epidemiology and Venereal Disease Control; Division of Sanitary Engineering; Division of Maternal and Child Health, and Crippled Children; Division of Vital Statistics; Division of Medical Licensure; State Health Laboratory; Division of Records and Accounts*. Pierre, SD: South Dakota, 1940.

———. *Seventeenth Biennial Report of the South Dakota State Board of Health, Including the Division of Administration, Division of Preventable Diseases, Division of Sanitary Engineering, Division of Maternal and Child Health and Crippled Children, Division of Public Health Nursing, Division of Dental Health, Division of Public Health Education, Division of Vital Statistics, Division of Medical Licensure, Division of Laboratories, State Health Laboratory, Division of Records and*

Accounts, South Dakota Tuberculosis Sanatorium, State Merit System. Pierre, SD: South Dakota, 1946.

———. *Eighteenth Biennial Report of the South Dakota State Board of Health, Including the Division of Preventable Diseases and Local Health Services, Division of Sanitary Engineering, Division of Maternal and Child Health and Crippled Children, Division of Public Health Nursing, Division of Dental Health, Division of Hospital Facilities, Division of Records and Accounts, Division of Vital Statistics and Public Health Education, of Laboratories, State Health Laboratory, South Dakota Tuberculosis Sanatorium*. Pierre, SD: South Dakota, 1948.

South Dakota State Board of Health and Medical Examiners. *Second Biennial Report of the State Board of Health and Medical Examiners, Including Reports of the Department of Health and Department of Medical Examiners, County Boards of Health and State Health Laboratory*. Pierre, SD: State Publishing, 1916.

South Dakota State Department of Health. *21st Biennial Report of the South Dakota State Board of Health, Including the Division of Preventable Diseases and Local Health Services, Division of Sanitary Engineering, Division of Maternal and Child Health and Crippled Children, Division of Public Health Nursing, Division of Dental Health, Division of Hospital Facilities, Division of Records and Accounts, Division of Vital Statistics and Public Health Education, of Laboratories, State Health Laboratory, South Dakota Tuberculosis Sanatorium*. Pierre, SD: South Dakota, 1956.

South Dakota Department of Natural and Environmental Resources. *Annual Compliance Report: South Dakota Public Water System Violations for the Period January-December 2003*. Pierre, SD: South Dakota Department of Natural and Environmental Resources, 2003.

South Dakota State Historical Society. *State Historic Preservation Office Statewide Preservation Plan 2011-2015*. Pierre, SD: South Dakota State Historical Society, 2011.

Spreng, Ronald E. "They Didn't Just Grow There: Building Water Towers in the Postwar Era." *Minnesota History* 53 (1992) 4:130-141.

United States Federal Works Agency. *Final Report on the WPA Program, 1935-43*. Washington, DC: Government Printing Office, 1947.

University of Pittsburgh, Archives Service Center. *Jones & Laughlin Steel Corporation Collection*. 2012. http://digital.library.pitt.edu/images/pittsburgh/joneslaughlin.html.

Versteeg, Jean D. *The History of Pittsburgh-Des Moines Corporation, 1892-1981*. Pittsburgh, PA: The Corporation, 1982.

The Water Tower. "Our Elliptical Bottom Tank for Combined Sprinkler and Mill Service." *The Water Tower*. (August, 1919):4-5.

W. E. Caldwell Company. *Tanks*. Louisville, KY: The Company, 1908.

———. *Caldwell Steel and Wood Tanks and Towers*. Louisville, KY: The Company, 1911.

———. *Caldwell Steel and Wood Tanks and Towers*. Louisville, KY: The Company, 1913.

———. *Caldwell Tanks*. Louisville, KU: The Company, 1962.

APPENDIX A: GLOSSARY

WATER TOWER TERMINOLOGY

Access Tube: A cylindrical steel structure that runs through the center of the water storage tank, providing personnel access to the tank roof from the bottom.

Access Tube Ladder: A ladder that is routed through the access tube used for personnel access to the tank roof.

Access Hatch: A port providing access to any portion of the structure. Typically, access hatches are located at the top and bottom of the water storage tank. An access hatch may also be provided to access the exterior of the support pedestal from an interior ladder platform on a single pedestal style tank.

Access Door: An access door is typically provided at the base of a storage structure, to access the interior of the support pedestal of a single pedestal style tank. An access door is typically a vertical man-door designed for head clearance of an upright person.

Altitude Valve: A hydraulically-controlled valve that will control the water level in the tank. The valve will close when the tank water level reaches a preset level, usually to prevent overflow.

Anchor Bolts: Structural bolts to anchor the support structure to the foundation.

Balcony Handrail/Guardrail: A rail that prevents falling from the balcony of a water storage tank.

Balcony: An elevated platform typically used for maintenance activities. Legged towers frequently have a balcony, which is located near the top of the support legs of the structure. From that point, access hatches may be available for access to the tank interior and secondary ladders may be present providing access to the tank roof.

Balcony Ladder: A ladder providing access to the balcony from the ground. This term could also refer to a ladder from the balcony to the roof.

Belly Plates (describe location/style of tower): Steel plates forming the bottom of the tank. Typical belly plates for an ellipidsoidal or spherical/spheroidal tank are curved and angled to form a circular horizontal projection when assembled.

Bolted Construction: A common water tank construction method, especially for glass-fused steel standpipes, utilizing flanged plates that are gasketed and bolted together to form the tank shell.

Bottom Capacity Level: The lowest water level in a water tank under normal operating conditions. If the water falls below this level the tank will no longer be functioning on the system.

Butt Joints: A construction joint where two components are placed adjacent to one another and attached by welding.

Capacity: The volume of water a tank is designed to hold.

Cathodic Protection: A method of controlling corrosion to structural steel through the use of sacrificial anodes or an imposed current to force the structural steel to be cathodic in an electrochemical cell.

Column (Post) Shoes: Steel connection between tower columns or posts on a legged tank and a concrete foundation. Typically welded to the column or post and bolted to the concrete foundation through cast-in-place anchor bolts.

Composite Water Tower: A style of elevated water storage tank having a cast concrete or masonry pedestal base supporting a steel water storage tank.

Concrete Piers/Footings: Most commonly, water tower foundations will consist of a slab on a ring-wall footing. Construction on soils prone to settling or compaction could also require a pile foundation, which could consist of concrete or steel piles.

Conical Steel Roof: A tank roof type common on older legged towers, sometimes referred to as the "tin man" style. As the name suggests, the roof is conical in shape and often extends over the vertical side walls of the tank forming an eave that is often open to the atmosphere.

Course: A horizontal ring of steel plate that comprised part of the side wall of a traditional style tank. Most traditional style tanks have side walls with two to five courses of steel plate, with three courses being most common.

Double Ellipsoidal: A legged water tower style having ellipsoidal shapes on the top and bottom of the tank and vertical side walls.

Dry Riser: A tube typically constructed around the wet riser water supply pipe to provide personnel access to the tank roof. Typically encloses a ladder system and lighting.

Exhaust Hatch: A hatch that is designed to provide ventilation to the tank interior during painting or maintenance activities. Often designed for the connection of an active ventilation fan system.

Fluted Column Tower: A style of single pedestal water tower having a support pedestal typically of larger diameter than other single pedestal designs, and constructed of folded steel plates. This style of tank is commonly found with tanks of large volume (500,000 gallons or greater).

Frost Box: An insulated enclosure that is sometimes constructed around a riser pipe to prevent freezing.

Frost Free Vent: A specialized vent attached to the water tank roof, which is designed to prevent frost from forming and blocking the vent opening in cold climates. The vent prevents a vacuum from forming in the tank when the water level decreases. Vent blockage

has historically led to catastrophic failure of water storage tanks through buckling and collapse of the tank walls.

Ground Storage Reservoir: Can refer to a steel or concrete water storage tank that is constructed at-grade or buried. Can be differentiated from a standpipe by a diameter that is greater than the height of the tank.

Head Range: The range of water level (typically measured in feet) between the bottom capacity level and the top capacity level.

Hemispherical Bottom: A tank bottom that is spherical in shape, with a circular cross-section.

High Water Line: See top capacity level.

Hydrocone: A water tower style with a saucer shaped tank, and constructed of flat plate steel that does not require forming for curvature prior to tank erection. This style of tower is typically used for low volume tanks (less than 250,000 gallons).

Inlet Pipe: The pipe that supplies water to the tank from the water distribution system. The differentiation of inlet and outlet usually would be applied when there is a separate pipe serving each purpose. This is sometimes done to improve tank mixing and eliminate areas of water stagnation within the tank.

Knuckle: A knuckle joint is used to connect two rods under tensile load that require movement flexibility in a non-axial direction.

Knuckle Plates: A rolled or pressed steel plate that is curved, and sometimes used around the top edge of a larger steel reservoir or standpipe where a self-supporting roof is desired.

Ladder: Access ladders are commonly found on the exterior of one leg of a legged water tower, or on the interior of single pedestal tanks, and provide personnel access to the balcony or the roof of the tank.

Ladder Cages: A safety device that is placed around the outside of a ladder to allow the climber to rest by leaning back against the cage during a climb.

Lap Joints: A construction joint where two components are overlapped and attached to one another. For water tanks, this is common at plate to plate connections whether welded or riveted.

Latticed Supports: Steel channels with interwoven diagonal steel rods to increase strength. Sometimes used as columns or legs on older legged water tower designs.

Manway: An opening in a tank wall or roof designed for personnel access. Can be designed to withstand pressure when they are located near the bottom of the water storage portion of a tank.

Obstruction Light: A light fixed on the top of the water tower for the purpose of aviation safety, as a warning to aircraft of the presence of an elevated structure. Also referred to as an aviation light at times.

Overflow: A pipe and associated equipment that run from the high water level in the tank to the ground with the purpose of providing a safe route for water to overflow if too much water is inadvertently supplied to the tank. Can include a weir box in the tank and a concrete splash pad at the base of the tank.

Overflow Pipe: Specifically referring to the pipe in the overflow system.

Painters Access Hatch: An access hatch on a water tank that is designed for access by painters. One such hatch will often have a flange to attach a ventilation fan during painting operations.

Painters Rings: Horizontal steel piping that is welded to the tank exterior, often at multiple elevations, for the purpose of attaching safety equipment during painting operations on the tank.

Panels "Tiers of Struts": A panel is a segment of a truss, surrounded by two vertical (leg/column) and two horizontal (strut) structural members, with diagonal tie rods crossing between corners.

Pressure Manway: A manway that gives access to the bottom of the water storage portion of a tank. Typically oval in shape with a gasket and an exterior bar that is bolted down to withstand the pressure inside the tank when full.

Public Water System: A water system in South Dakota that provides water via piping or other constructed conveyances for human consumption to at least 15 service connections or serves an average of 25 people for at least 60 days each year. In South Dakota there are three types of public water systems – community (towns, housing developments, rural water systems), nontransient noncommunity (schools, day care centers, factories), or transient noncommunity systems (rest stops, parks, or campgrounds).

Pumpstation (Pump House): A facility whose primary purpose is to house pumps that transfer water or increase water pressure.

Radial Cone Bottom Tank: A large diameter, high capacity tank, typically 500,000 gallons or more, with a low range of head (25 to 35 feet). They have relatively flat, bottoms with only a slight angle, typically with a 4 to 5 feet diameter riser. The tank rests on tubular columns, which do not require cross-bracing at heights up to 100 feet.

Raw Water Intake: A facility that draws water from a surface water source (such as a lake or river) and transfers that water to a water treatment plant. Often consists of suction piping that extends into the surface water body at a specified depth, intake screens and appurtenances to remove large objects or coarse sediment, pumps, and possibly chemical feed equipment.

Revolving Ladder: A ladder mounted to the top of the tank on a swivel joint which extends down over the side of the tank. Typically to the balcony if there is one. The ladder can be rotated around the tank to access the side walls and the top of the tank.

Ring Wall: A common foundation footing type for water storage tanks consisting of a buried wall that supports a circular slab around the slab perimeter.

Riser Assembly: The riser pipe and support brackets.

Riser Pipe: The vertical pipe that supplies water to the tank, and also commonly removes water from the tank when the tank is draining. Most often the riser pipe is located at the center of the tower and terminates at the base of the tank.

Riveted Construction: Construction utilizing rivets to connect structural components.

Rivets: A permanent mechanical fastener that was commonly used to attach the steel plates forming a water storage tank historically. Over time, welding has replaced riveting as a means of assembling the steel plates.

Roof Handrail: A handrail that typically surrounds an operation area at the top center of the tank. The handrail provides fall protection and often encloses the access manway to the roof from the riser tube and one or more access manways to the tank.

Roof Plates: Steel plates that form the top of a tank when assembled by welding or riveting. For many styles of tanks, these plates are pressed or rolled to form the shape of the upper portion of the tank.

Safety Climb: A cable or rail that runs parallel to a ladder and provides a means for a ladder climber to tie off for fall protection. The tie off point typically consists of an apparatus with ratchet action that moves up but not down along the cable or rail, in order to follow the climber up the ladder.

Seal Welding: Welding that completely seals a joint between two steel components of a tank. Consists of a continuous weld over the joint, typically on all sides of a surface, and is used for strength as well as to prevent corrosion in locations where coatings are difficult to apply.

Shell Plates: Any of the steel plates forming the body of a tank.

Silt Stop: A pipe segment that protrudes into the bottom of a tank bowl around the tank outlet and prevents sediment (silt for example) that settles from the water during storage in the tank from entering the water distribution system.

Single Pedestal Flared vs. Single Pedestal A flared single pedestal tank has a flared conical base on the support column. The bottom of the support pedestal increases in diameter as the pedestal approaches the foundation to provide greater stability. It is common with spherical and spheroidal single column tanks. Fluted column tanks do not have a flared base.

Skid Resistant Surface: A surface finish applied to surfaces walked on for operations or maintenance to prevent slips and falls. Typically a component of the tank coating system, such as a coarse sand mixed with the final coat applied.

Sphere: A common elevated single pedestal water tower style, typically used for smaller tanks (less than 250,000 gallons in volume). The tank has a spherical appearance, with a circular cross-section. The pedestal transitions to the spherical tank with curved steel plates.

Spheroid: A common elevated single pedestal water tower style, typical of tanks up to 500,000 gallons in volume. The tank has a spheroidal (flattened sphere) appearance, with an oval cross-section. The spheroidal shape is similar to an ellipsoidal shape, though ellipsoidal top and bottom shapes are used on legged tower styles while the spheroidal shape forms the entire tank on a single pedestal spheroid tower. Similar to a sphere tower, the spheroid has a curved transition between pedestal and tank.

Spider: A structural feature of older tanks, located on the interior of the water tank, utilizing steel rods in tension connected to a central ring and extending radially to the side walls.

Spider Rods: The structural rods of a spider assembly.

Standpipe: A style of at-grade water storage tank where the height is greater than the diameter of the tank. The entire interior volume of a standpipe is typically used for water storage.

Support Struts: Structural steel truss members commonly found in the support assembly of a legged water tower. These are typically angles or channels and normally horizontal, as opposed to the columns or legs which are vertical.

Suspended Bottom: A tank bottom that is supported or "suspended" from a circular girder. Suspended bottoms are used on very large tanks, or larger. They can be used on different types of tanks Hydropillars and Fluted Column Tanks have suspended bottoms as do some large Waterspheroids (2,000,000 million gallon and larger).

Tank Ladder: Any of the ladders used to access various portions of a water tank or tower structure. Ladders are commonly used to access tank balconies and the tank roof, and also the tank interior from access hatches on the roof.

Toro Ellipsoidal: A common medium-capacity legged tank water tower style (250,000 gallons to 500,000 gallons in volume), having a torus-shaped bottom and ellipsoidal top. The torus allows greater efficiency in steel use by causing the bottom of the shell to act as a membrane in tension.

Toro Spherical: Similar to Toro Ellipsoidal, but spherical top shape rather than ellipsoidal.

Tower Pedestal: The steel support column on a single pedestal style water tower.

Top Capacity Level: The highest water level in a water tank, normally controlled by the overflow device in the tank.

Tower Posts The structural columns (legs) of a legged water tower.

Tower Rods (Cross Bracing): Also called wind rods or more commonly tie rods, these rods hold tensile loads in the truss supporting a legged water tower as may be imposed by a lateral wind load on the structure.

Valve Vault: An accessory that is commonly found on the site of a water tower, consisting of a below-grade structure housing water main valves for controlling water flow to the tank.

Walkway: Could refer to any catwalk in or on a water tower providing operator access to various portions of the tank for maintenance or water sampling activities.

Water Treatment Plant (Facility): A facility designed for the refinement of water, typically for use in a water distribution system. Water treatment plants can consist of various chemical and physical processes designed to remove hazardous pollutants, minerals, bacteria, and/or viruses from the source water prior to delivering to water utility customers for use. Treatment commonly involves coagulation of particles, a settling basin, and sand filtration.

Water Works: Water works may include water wells; pipelines and aqueducts to carry water from the source supply to the city; pumping stations; storage structures, such as water towers and tanks, standpipes, ground based tanks, and reservoirs; treatment and purification facilities, including filtration, treatment, and softening plants; and a distribution network, including water mains, distribution lines, and hydrants.

Welded Construction: Construction utilizing welding to connect structural components. Has largely replaced riveted construction of water towers over time.

Wellhouse: A facility constructed over a groundwater well that houses a well pump and motor, discharge piping, and sometimes chemical feed systems.

APPENDIX B: PHOTOGRAPHIC GLOSSARY

LEGGED WATER TOWERS

Traditional Style Water Towers

LANGFO

HOWA

DISON
MA

HURON

Traditional Style Towers with Arched and Straight Legs

Double Ellipsoidal Water Towers

Legged Spherical Water Towers

Toro-Spherical and Toro-Ellipsoidal Water Towers

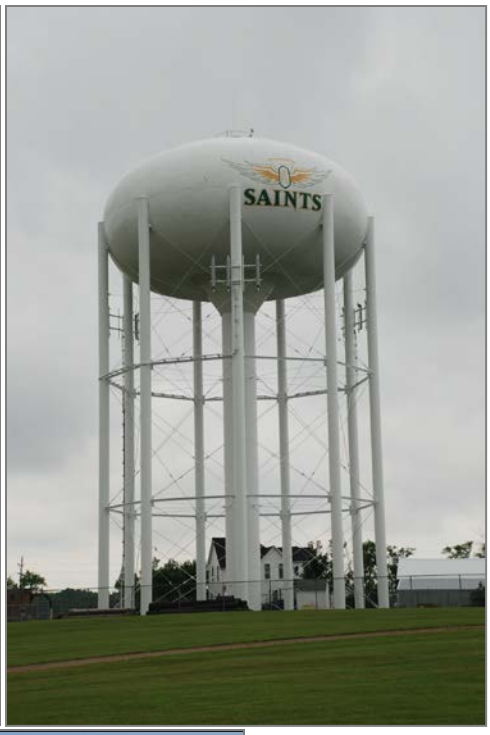

SINGLE PEDESTAL WATER TOWERS

Single Pedestal Spherical Water Towers

Spheroid Water Towers

APPENDIX C: LIST OF KNOWN, EXTANT STEEL WATER TOWERS ASSOCIATED WITH WATER SYTEMS IN SOUTH DAKOTA, 1894-1967

SHPO ID	Property Name	City	Date
AU00000061	Plankinton Water Tower	Plankinton	1909
AU00000062	Stickney Water Tower	Stickney	1909
BE00000879	West Water Tower	Huron	1940
BE00003440	Virgil Water Tower	Virgil	1924
BE00003700	Hitchcock City Water Tower	Hitchcock	c. 1925
BE00003701	Wessington Water Tower	Wessington	c. 1920
BE00400003	Wolsey Water Tower	Wolsey	c. 1940
BE00100087	Winter Park Water Tower	Huron	1915
BK00002330	Aurora Water Tower	Aurora	c. 1950
BK00002333	6th Street Water Tower	Brookings	c. 1960
BK00002334	22nd Avenue Water Tower	Brookings	c. 1950
BK00002336	Volga Municipal Water Tower	Volga	1963
BK00002337	White Water Tower	White	1941
BN00000722	South Water Tower	Aberdeen	1934
BO00000367	Scotland Water Tower	Scotland	1911
BO00000369	Springfield (Old) Water Tower	Springfield	1914
BR00000033	Kimball Water Tower	Kimball	1914
BR00000035	Chamberlain Water Tower	Chamberlain	c. 1960
BT00000557	Martin Water Tower	Martin	c. 1935
BU00000238	Nisland Water Tower	Nisland	c. 1920
CA00000536	Herreid Water Tower	Herreid	1948
CA00000537	Pollock Water Tower	Pollock	1955
CD00000598	6th Avenue Tank	Watertown	1966
CD00000599	14th Avenue Tank	Watertown	1963
CH00000326	Platte Water Tower	Platte	1909
CH00000332	Lake Andes Water Tower	Lake Andes	1955
CK00000039	Willow Lake Water Tower	Willow Lake	1948
CK00000055	Clark Water Tower	Clark	1923
CK00000056	Raymond Water Tower	Raymond	c. 1940
CL00000564	Market Street Water Tower	Vermillion	1912
CL00000566	Wakonda Water Tower	Wakonda	1910
CO00000057	McIntosh Water Tower	McIntosh	1909
CO00000058	McLaughlin Water Tower	McLaughlin	c. 1915
CU00000636	South Dakota Sanatorium for Tuberculosis Water Tower	Custer	1950
DA00000363	Waubay Water Tower	Waubay	c. 1940
DA00000798	Webster Water Tower	Webster	1902
DE00000192	Gary Water Tower	Gary	c. 1939
DG00000082	Armour Water Tower	Armour	c. 1925
DV00000298	South Rowley Street Water Tower	Mitchell	1928

SHPO ID	Property Name	City	Date
DV00000304	Ethan Water Tower	Ethan	c. 1925
DV00000305	West Side Water Tower	Mitchell	1965
DV00000306	Burr Street Water Tower	Mitchell	1925
DW00000223	Timber Lake Water Tower	Timber Lake	1921
ED00000050	Bowdle Water Tower	Bowdle	c. 1920
ED00000051	Hosmer Water Tower	Hosmer	1949
ED00000053	Mina Lake Water Tower	Mina Lake	c. 1960
ED00000054	Milwaukee Road Water Tower[13]		c. 1920
ED00000055	Roscoe Water Tower (50,000 gallon)	Roscoe	c. 1940
FA00000153	Oelrichs Water Tower	Oelrichs	c. 1933
FK00000075	Cresbard Water Tower	Cresbard	1949
GR00000234	Dallas Water Tower	Dallas	1910
GR00000434	Burke Water Tower No. 1 (50,000 gallon)	Burke	1908
GR00000436	Herrick Water Tower	Herrick	1963
GR00000437	Fairfax Water Tower	Fairfax	1919
GT00001182	Revillo Water Tower	Revillo	1967
HD00000158	Ree Heights Water Tower	Ree Heights	1927
HL00000166	Castlewood Water Tower	Castlewood	1929
HS00000064	Alexandria Water Tower	Alexandria	1922
HS00000069	Emery Water Tower	Emery	1931
HT00001601	Menno Water Tower	Menno	1918
JE00000054	Alpena Water Tower	Alpena	c. 1920
JK00000070	Kadoka Water Tower	Kadoka	c. 1920
JN00000049	Murdo Water Tower	Murdo	c. 1920
KB00000479	Arlington Water Tower	Arlington	c. 1920
KB00000480	De Smet Water Tower	De Smet	1922
KB00000482	Oldham Water Tower	Oldham	1966
LK00000235	Chester Water Tower	Chester	1967
LK00000237	Madison Water Tower	Madison	1935
LN00000065	Harrisburg Water Tower	Harrisburg	1932
LN00000706	Canton Water Tower	Canton	c. 1965
MD00000336	Faith Water Tower	Faith	1923
MH00001382	Dell Rapids Water Tower	Dell Rapids	1894
MH00001812	Colton Water Tower	Colton	c. 1945
MH00001817	Humboldt Water Tower	Humboldt	c. 1936

[13] Originally built by the Milwaukee Road Railroad as a water tower for servicing steam locomotives and later acquired by the City of Roscoe and rehabilitated for use by the City's water system.

SHPO ID	Property Name	City	Date
MH00001818	Valley Springs Water Tower	Valley Springs	1965
MK00000136	Canistota Water Tower	Canistota	1909
MK00000137	Salem Water Tower	Salem	1967
ML00000406	Langford Water Tower	Langford	c. 1940
ML00000622	Veblen Water Tower	Veblen	1914
MN00000099	Howard Water Tower	Howard	1919
MO00000082	Flandreau Water Tower	Flandreau	1929
MP00000044	Leola Water Tower	Leola	c. 1920
PN00000803	Wall Water Tower	Box Elder	c. 1950
PN00000804	Morning View Water Tower	Box Elder	1954
PN03000021	Sioux San Hospital Water Tower	Rapid City	1932
RO00000353	Rosholt Water Tower	Rosholt	c. 1930
RO00000354	Sisseton Water Tower	Sisseton	1960
RO00000355	Summit Water Tower	Summit	1915
RO00000356	Wilmot Water Tower	Wilmot	1919
SB00000081	Letcher Public Water Tower	Letcher	1967
SL00001122	Onida Main Street Water Tower	Onida	c. 1945
SL10250002	Agar Water Tower	Agar	c. 1920
SP00000369	Tulare Water Tower	Tulare	c. 1940
TU00000486	Marion Water Tower	Marion	1920
TU00000491	Viborg Water Tower	Viborg	c. 1920
UN00000751	Elk Point Traditional Water Tower	Elk Point	c. 1925
WW00000063	City of Mobridge Water Tower	Mobridge	1950
WW00000064	Mobridge Water Tower	Mobridge	1912
WW00000065	Selby Water Tower	Selby	1948
YK00000947	Gayville Water Tower	Gayville	1915
YK00000948	Lesterville Water Tower	Lesterville	1919
YK00000949	Utica Municipal Water Tower	Utica	1914
YK00000950	Volin Water Tower	Volin	1912
YK00000954	North Water Tower	Yankton	1958
ZE00000227	Dupree Water Tower	Dupree	1957

APPENDIX D: EXAMPLE WATER SYSTEM PLAN

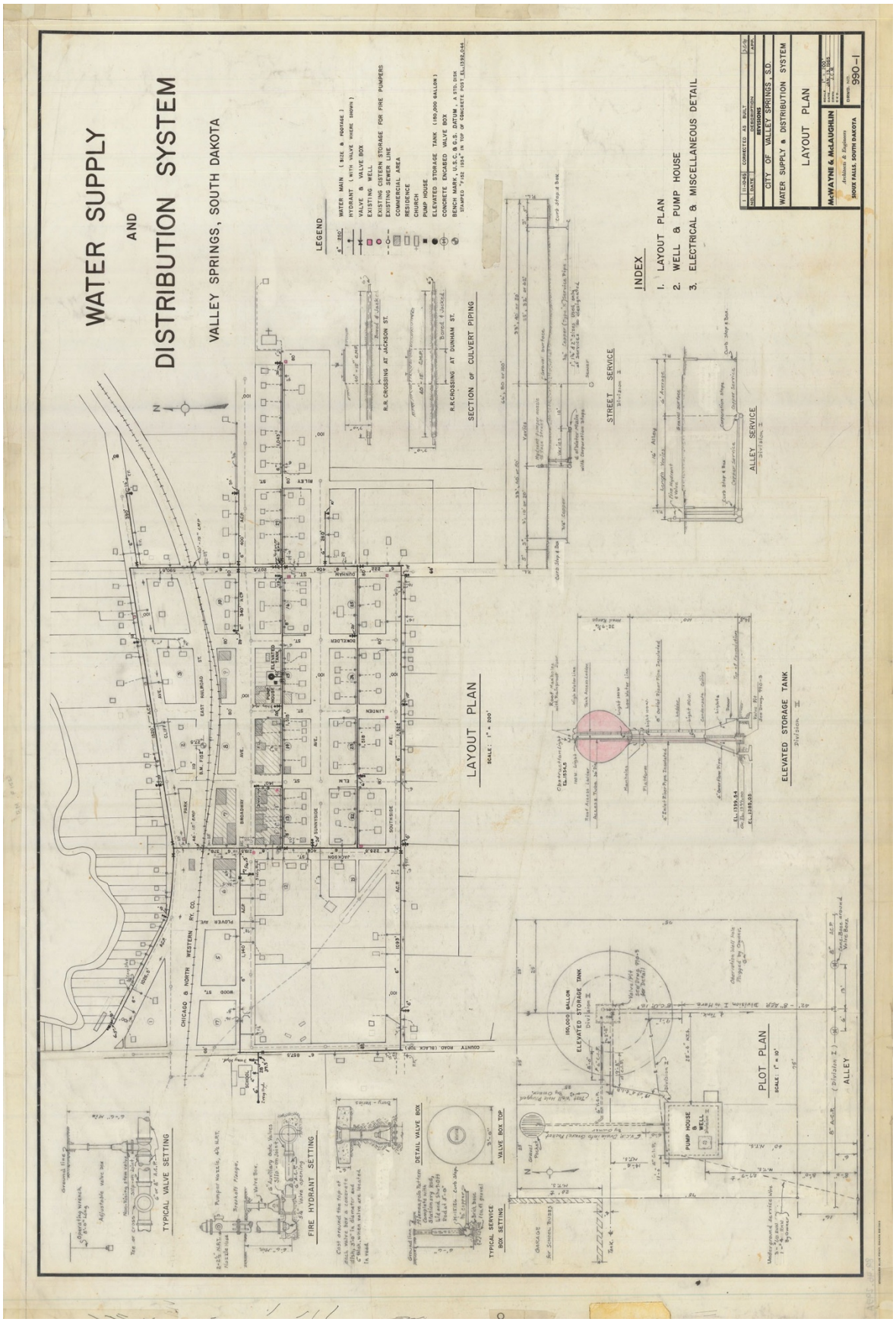

WATER SUPPLY AND DISTRIBUTION SYSTEM FOR VALLEY SPRINGS, SOUTH DAKOTA, 1956
(Courtesy Siouxland Heritage Museums)