Tourist Impact in Acadia National Park

Investigating and analyzing tourist usage patterns on Park Loop Road to determine fee compliance solutions

Submitted by:

William Dziuban

Amanda Leahy

John Sengstaken

Daniel Whittle

Project Advisor:

Frederick Bianchi

This report represents the work of WPI undergraduate students submitted to the faculty as evidence of completion of a degree requirement. WPI routinely publishes these reports on its website without editorial or peer review. For more information about the projects program at WPI, please see

http://www.wpi.edu/academics/ugradstudies/project-learning.html

Abstract

This project investigated the problems associated with increased visitation within Acadia National Park. Specifically, the problem of unsatisfactory fee compliance associated with unmonitored entry to the park was addressed. To this end, pressure based axle counters were designed, built, and deployed at all points of access to Park Loop Road. Additionally, fee compliance was quantified in parking lots along Park Loop Road. Ultimately, a relationship was found between unmonitored entry and fee noncompliance, and a comprehensive solution was researched and proposed.

Acknowledgements

The team would like to thank Dr. Abraham Miller-Rushing, Charlie Jacobi, and John Kelly from the National Park Service for constantly supporting this project and answering many questions. Their input and time was invaluable to the success of this project. The team would also like to thank Professor James Chiarelli for his guidance during early drafts of this project. Finally the team would like to thank Professor Frederick Bianchi, the project advisor.

Executive Summary

The broad goal of this project can be summarized with the following mission statement: “To protect the natural beauty of Acadia National Park for current and future generations to enjoy the team researched heavily trafficked and congested areas to solve problems that stem from increased visitation and low fee compliance.” This first iteration of the tourist impact project focused on the following objectives:

Objective 1: Explore and implement methods of collecting visitor entrance and pass compliance data in Acadia National Park.

Objective 2: Analyze the collected data to identify patterns and connections between entrance traffic and visitor pass compliance.

Objective 3: Use the collected data to evaluate and recommend solutions to the fee compliance issues.

To complete these objectives the team decided to count cars entering Park Loop Road via the seven entrances and to manually count compliant and noncompliant cars in 16 parking lots situated along Park Loop Road. Cars entering the park were counted autonomously using pneumatic tube sensors designed and built by the team. Pneumatic tube sensors were deployed at the seven entrances to Park Loop Road which are as follows: Paradise Hill Road, Kebo Street, Great Meadow Drive, Sieur de Monts Road, Schooner Head Road, Otter Cliffs Road, and Stanley Brook Road. Pneumatic tube sensors consist of a tube, a pressure sensor, and electronics

that record axles when the tube is run over by a car or motorcycle. These sensors were deployed in the field and recorded data over the course of two weeks.

The team conducted surveys at several parking lots around Park Loop Road. They recorded the number of compliant and noncompliant cars, the states from which the noncompliant cars originated, and the total number of parking spaces within each lot. By knowing the total number of cars and spaces in a parking lot, the team was able to determine the percentage of its spaces which were occupied. These surveys were conducted three times a day for two days at each location. The times during the day which parking lots were counted were: 10:00AM-11:00AM, 12:30PM-3:30PM, and 7:00PM-8:00PM. Morning and afternoon counts occurred during the operational hours of the toll station; the evening count was after the station closed for the night.

The measurements from the pneumatic tube counts indicate that Paradise Hill Road is the most used entrance, with over 4000 cars entering there on average daily, while Otter Cliffs Road is the least used entrance, with less than 200 cars entering there per day. The most popular time for entering the park was between 10:00AM and 12:00PM, with over 1800 cars entering the park during that time. There was a dramatic increase in the number of cars entering the park between 4:00AM and 5:00AM, concurrent with visitors entering the park in time to see the sunrise.

The parking lot counts show that the most compliant times were during the operational hours of Sand Beach Entrance Station, with the average compliance throughout the parking lots being over 86% at those times. The least compliant time was after the toll station closed. The most compliant parking lot, Gorham Mountain

Trail with 100 percent, was situated in the control group. The least compliant lots were those associated with the Jordan Pond House, where the two lots had less than 77% compliance. Jordan Pond House, a major attraction, is accessible from three entrances that do not require the vehicle to pass through Sand Beach Entrance Station.

Parking lots were most full in the morning and afternoon hours, with evening hours being nearly empty. The exceptions to this were the Blue Hill Overlook and Cadillac Mountain Summit parking lots that were filled during the sunset. The Jordan Pond House lots were over capacity during the afternoon hours.

The team's recommendation to increase fee compliance within Acadia National Park is to close under utilized entrances and install gated stations at the remaining entrances outfitted with passive radio frequency identification (RFID) readers.

Authorship

William Dziuban - Contributed to the Introduction, Background, Methodology, and Conclusions chapters. His work was concentrated on the project objectives, “Previously Proposed Solutions” in “Park Layout and Traffic Flow”, and “Data Collection Methods” and “Issues and Troubleshooting” in the Methodology. Within the Conclusions chapter, William contributed to “Increased Signage”, “Elimination of Two-way Traffic”, “Shutdown of Entrances”, “RFID System”, “The Team’s Recommendation”, and “Project Direction”. In addition, he proofread and edited the entire paper in general, focusing on grammar, syntax, spelling, and consistency.

Amanda Leahy - Contributed to the Introduction, Background, and Methodology chapters. Specifically, her work is seen in the “Previously Proposed Solutions” and “Solutions Implemented in Other Parks” within the “Park Layout and Traffic Flow” section of the Background chapter. She also contributed to writing of the “Environmental Impact” and “Fee Collection” sections. Within the Methodology chapter, Amanda wrote the basis for the section “Deployment of Sensors” and added to the “Fee Collection” sections. Within the Results section, Amanda crafted the tables and graphs. She also wrote the Analysis sections She created the tables of parking lot counting data found in Appendix G. She helped format the Resources section, the in-text citations, and general editing for consistency throughout the paper. Amanda was responsible for cataloging and organizing the collected data.

John Sengstaken - Contributed to the Introduction, Background and Methodology chapters. Specifically John contributed to the first paragraph of the introduction, the project objectives, the introductory paragraphs of the Background chapter, “Park Layout and Traffic Flow”, “Data Collection”, “Fee Collection”, “Gaining Access to the park”, the introductory paragraphs of the Methodology chapter, “Data Collectection Methods”, “Traffic Counting”, “Manual Counting”, “Pneumatic Tube Sensors”, “Cameras”, and “Sensor Accuracy”. Additionally, John designed the aluminum sensor case, its manufacturing processes, and assisted in the assembly and testing of the finished sensor. John also worked on the final presentation and its associated graphics including developing and updating the map.

Daniel Whittle - Contributed to the Introduction, Background, Methodology, Suggestions for Future (Solar Power and Real Time Clock) and appendices A, C, D, and E. Specifically, Daniel edited and proofread the Introduction, and worked on the

“Park Layout and Traffic Flow”, “Data Collection Methods”, “Traffic Counting”, “Pneumatic Tube Sensors”, “Possible Solutions”, and “Suggestions for Future Tourist Impact Teams”. In addition, Daniel designed the electronics on board the pneumatic tube sensors, wrote the code for the sensors, wrote data processing program, assisted in assembly of the sensors, and designed the testing process of the finished sensor. Additionally, Daniel was responsible for the troubleshooting and repair of sensors.

Table of Contents

Abstract **1**
Acknowledgements **2**
Executive Summary **3**
Authorship **6**
1 Introduction **11**
2 Background **14**
2.1 Park Layout and Traffic Flow 15
2.1.1 Data Collection 17
2.1.2 Previously Proposed Solutions 18
2.1.3 Solutions Implemented in Other Parks 19
2.2 Environmental Impact 21
2.3 Fee Collection 21
2.3.1 Gaining Access to the Park 26
3 Methodology **27**
3.1 Data Collection Methods 29
3.2 Traffic Counting 30
3.2.1 Manual Counting 30
3.2.2 Pneumatic Tube Sensors 30
3.2.3 Testing Sensor Accuracy 35
3.2.4 Deployment of Sensors 36
3.2.5 Data Processing Software 42
3.2.6 Cameras 45
3.2.7 Issues and Troubleshooting 45
3.3 Fee Compliance Checks 46
4 Results **49**
4.1 Entrance Data 49
4.2 Parking Lot Compliance 52
4.3 Parking Lot Percent Full 55
5 Analysis **56**
6 Conclusions **58**
5.1 Possible Solutions 58
5.1.1 Increased Signage 58
5.1.2 Elimination of Two-way Traffic 58
5.1.3 Shutdown of Entrances 59
5.1.4 RFID System 59
5.1.5 Ticket Operated Gate 60

5.1.6 The Team's Recommendation 60
5.2 Suggestions for Future Tourist Impact Teams 62
5.2.1 Project Direction 62
5.2.2 Solar Power and Real-time Clock for Sensors 63
5.2.3 Use of Other Counting Technology 64
Resources 65
Appendix A: Arduino Code 69
Appendix B: Machine Reports 71
Appendix C: Sensor Calibration Instructions 117
Appendix D: Solar Panel Circuit 119
Appendix E: Software Source Code 120
Appendix F: Sensor Output 121
Appendix G: Parking Lot Counts 122
Appendix H: Cost Benefit Analysis 132
Appendix I: Noncompliance by State 134

Table of Figures

Figure 1: Annual Recreational Visitors Since 2005 14
Figure 2: Map of Park Loop Road 16
Figure 3: Parking Lots Located Along Park Loop Road 17
Figure 4: Park Pass Hangtag 23
Figure 5: Locations to Purchase Acadia National Park Passes 24
Figure 6: Parking Lots Counted by the Tourist Impact Team 28
Figure 7: Location of Pneumatic Tube Sensors 29
Figure 8: Pneumatic Tube Sensor Deployed in Acadia National Park 31
Figure 9: Prototype Casing and Inner Carriage of Sensor 31
Figure 10: Inner Electronics 33
Figure 11: Reference Potentiometer Schematic 33
Figure 12: Completed Sensor 34
Figure 13: Installation of Pneumatic Tube 37
Figure 14: Brass Barbs and Sensor Setup 37
Figure 15: Paradise Hill Road Map 38
Figure 16: Kebo Street Map 39
Figure 17: Great Meadow Drive Map 39
Figure 18: Sieur de Monts Road Map 40
Figure 19: Schooner Head Road Map 40
Figure 20: Otter Cliffs Road Map 41
Figure 21: Stanley Brook Road Map 42
Figure 22: Main Window of the Software GUI 44

Figure 23: Edit Site Window 44
Figure 24: Average Hourly Entry Rate at Sensor Locations 49
Figure 25: Average Cars Entering per Day 51
Figure 26: Average Park Pass Compliance by Location 52
Figure 27: Average Park Pass Compliance by Time 54
Figure 28: Flow Chart of Proposed Entrance Stations 62
Figure 29: Cost-Benefit Graph 133
Figure 30: Noncompliance by State 136

Table of Tables

Table 1: Cost and Description of Park Passes 25
Table 2: Accuracy Test Scenarios 35
Table 3: Average Number of Cars Entering at Each Hour 50
Table 4: Average Number of Cars Entering at Each Location 51
Table 5: Average Park Pass Compliance by Location 53
Table 6: Average Park Pass Compliance by Time 54
Table 7: Average Fullness of Parking Lots 55
Table 8: Schooner Head Lot Data 122
Table 9: Sand Beach Lot Data 122
Table 10: Sand Beach Overflow Data 123
Table 11: Sand Beach Upper Lot Data 123
Table 12: Ocean Path 1 Lot Data 124
Table 13: Ocean Path 2 Lot Data 124
Table 14: Thunder Hole Lot Data 125
Table 15: Thunder Hole Road Data 125
Table 16: Gorham Mountain Trail Lot Data 126
Table 17: Ocean Path 3 Lot Data 126
Table 18: Otter Point Lot Data 127
Table 19: Fabbri Picnic Area Lot Data 127
Table 20: Fabbri Memorial Lot Data 128
Table 21: Otter Cliff Parking Lot Data 128
Table 22: Jordan Pond House Main Lot Data 129
Table 23: Jordan Pond House Auxiliary 1 Lot Data 129
Table 24: Jordan Pond House Auxiliary 2 Lot Data 130
Table 25: Blue Hill Overlook Lot Data 130
Table 26: Cadillac Mountain Summit Lot Data 131
Table 27: Cost Benefit Analysis of Gated RFID Pass Solution 132
Table 28: Noncompliance by State 134

1 Introduction

The United States National Park System offers unparalleled experiences, allowing a global audience to admire some of the most beautiful and significant natural locations the nation has to offer. Over 307 million recreational visitors entered the nation's parks in 2015 (Prentice-Dunn 2016). All across the country, locals and tourists have the opportunity to explore these astonishing natural landmarks. Acadia National Park, which celebrated its 100th anniversary in 2016, is no exception. Located on Mount Desert Island, Acadia offers unrivaled views, soaring peaks, pristine nature, and the opportunity to tour the breathtaking landscape.

As the country's ninth most visited national park, Acadia has long been a popular destination for Maine locals and out-of-state travelers alike (National Park Visitor Use Statistics). However, in recent years the park has experienced difficulties in handling the massive influx of tourists during the summer months; this is understandable, given that it is the 13th smallest national park by acreage (National Park Visitor Use Statistics). Although attracting many visitors is one of the obvious goals and purposes of a national park, last summer Acadia was simply unable to accommodate the sheer number of cars during peak visitation times.

Another point of investigation is fee compliance, a large problem for the park. All visitors to the park are required to purchase a park pass, with prices varying depending on mode of transportation and number of guests. Of the fees collected by Acadia, 80% benefit the park directly, primarily funding the Island Explorer system and the

maintenance of the park's trails, roads, and other features (Your Dollars at Work). The remaining 20% goes to other national parks that are not allowed to collect fees due to regulations set in their charters (Your Dollars at Work). Despite the sale of passes at several locations throughout the park and online, there is only one toll station. This means an estimated 20-30% of visitors do not purchase a pass (National Park Service 2016). As a result, the park has less money to spend on its own upkeep. Due to the disappointing rate of compliance, park rangers have recently become more proactive about ticketing visitors who do not display park passes.

This project investigated traffic management and means of improving the success of fee collection in the park. Traffic management data quantified the number of vehicles entering the park at predefined locations and also identified peak traffic times. Fee compliance data was collected by manually counting and recording the number of compliant and noncompliant vehicles in set parking lots situated around Park Loop Road. The data was then analyzed and presented to park officials, along with potential solutions to the issue of low fee compliance.

The broad goal of this project can be summarized with the following mission statement: To protect the natural beauty of Acadia National Park for current and future generations to enjoy the team researched heavily trafficked and congested areas to solve problems that stem from increased visitation and low fee compliance. This iteration of the project focused on the following objectives:

Objective 1: Explore and implement methods of collecting visitor entrance and pass compliance data in Acadia National Park.

Objective 2: Analyze the collected data to identify patterns and connections between entrance traffic and visitor pass compliance.

Objective 3: Use the collected data to evaluate and recommend solutions to the fee compliance issues.

2 Background

More than 2.8 million people visit Acadia National Park each year, making it one of the most heavily trafficked national parks (National Park Service). With the total number of recreational visitors climbing by roughly 10% over the past two years, the park is facing several critical challenges associated with increased visitor usage (National Park Service Visitor Use Statistics).

Annual Recreational Visitors Since 2005

2005	2,051,484
2006	2,083,588
2007	2,202,228
2008	2,075,857
2009	2,227,698
2010	2,504,208
2011	2,374,645
2012	2,431,052
2013	2,254,922
2014	2,563,129
2015	2,811,184

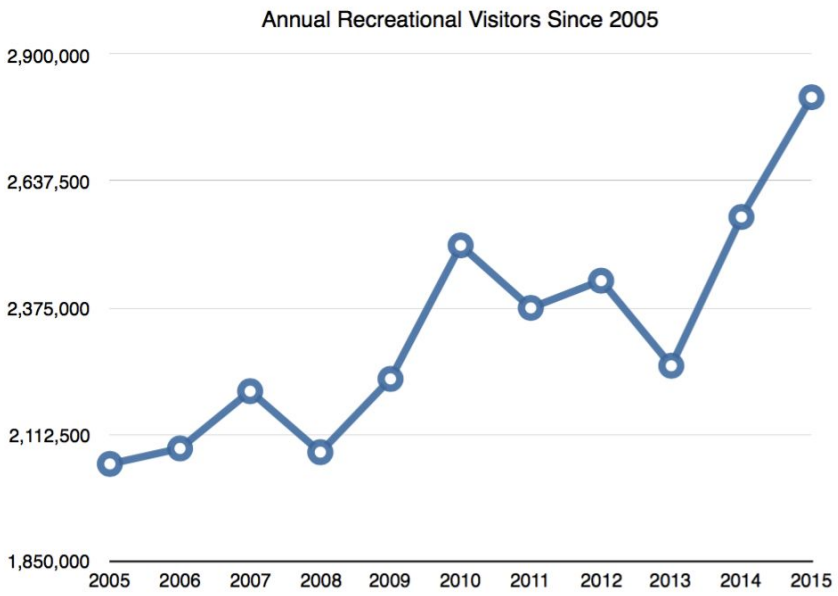

Figure 1: Annual Recreational visitors since 2005. (National Park Service Visitor Use Statistics)

One such challenge is investigating the park's fee compliance rates. Every visitor who enters Acadia National Park is required to display a park pass. The most recent estimate of fee compliance among visitors is 60-70% (National Park Service

2016). This loss in revenue directly impacts the park's yearly budget, and by extension, the quality of the park itself.

Park Layout and Traffic Flow

While Acadia National Park extends beyond Mt. Desert Island, most of the tourist traffic is concentrated along the eastern coast and into the center of the island along Park Loop Road. Park Loop Road is approximately 18.5 miles around, 5.11 miles of which is two-way. Including a three mile drive from the Hulls Cove Visitor Center along Paradise Hill Road and a six mile drivable ascent and descent of Cadillac Mountain, it is 27.5 miles around. The road is two lanes wide and one-way from the intersection at Paradise Hill until the intersection with Stanley Brook Road. Two way traffic travels for the remaining five miles of the loop. An entrance station to check and sell park passes is strategically placed roughly one half mile before Sand Beach and Ocean Path, two of the park's most visited attractions. A map of Park Loop Road can be found in Figure 2 below. The team identified 22 parking lots located along Park Loop Road, including at popular locations such as Sand Beach, Thunder Hole, Otter Cliff, the Jordan Pond House, and Cadillac Mountain. A map of parking lots is located in Figure 3 below. While these lots are designed to reduce congestion, they rapidly fill at peak hours resulting in overflow. In the case of Sand Beach, Thunder Hole, and Otter Cliff, these cars accumulate in the right lane of Park Loop Road. These attractions are the subjects of many of the traffic difficulties in the park, and park infrastructure is unable to handle the rising number of visitors. In fact, park officials

closed the mountain to vehicle traffic on at least two occasions in 2016 due to excessive traffic buildup on the heavily graded Cadillac Summit Road. Similarly, a 2014 study found that 22 out of 24 designated parking areas reached their capacity during peak hours (Kelly Summer 2015).

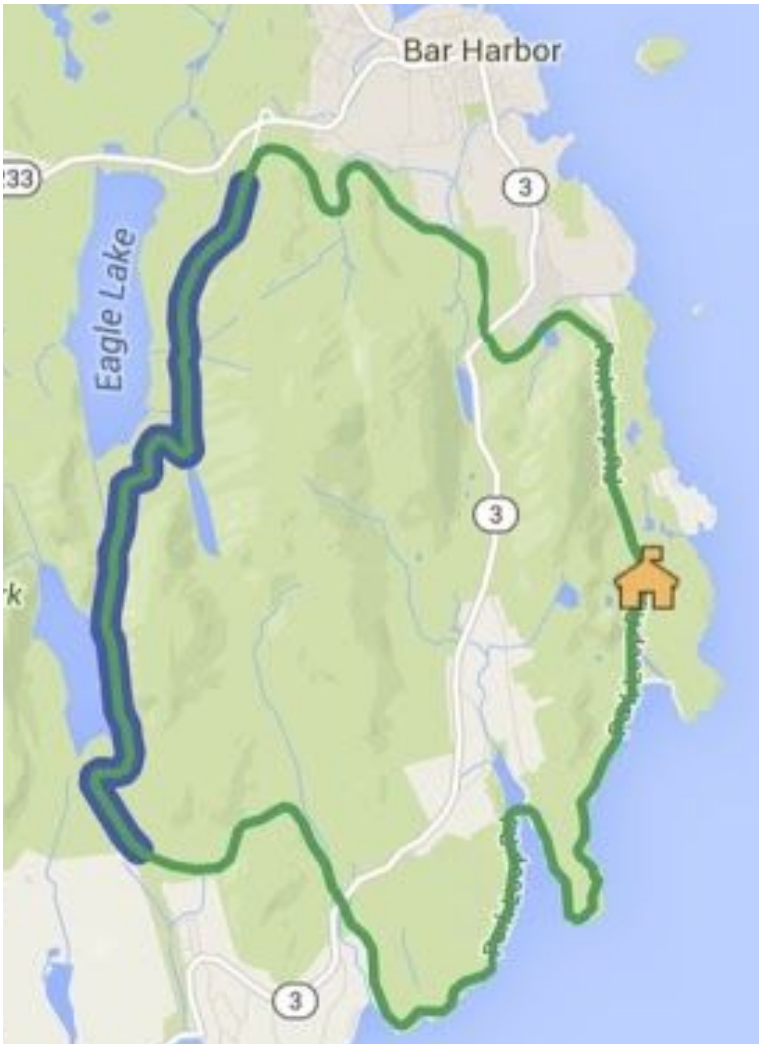

Figure 2: A map of Park Loop Road. The green portion is the one-way stretch, while the blue is the two-way portion. The yellow house represents the Sand Beach Entrance Station.

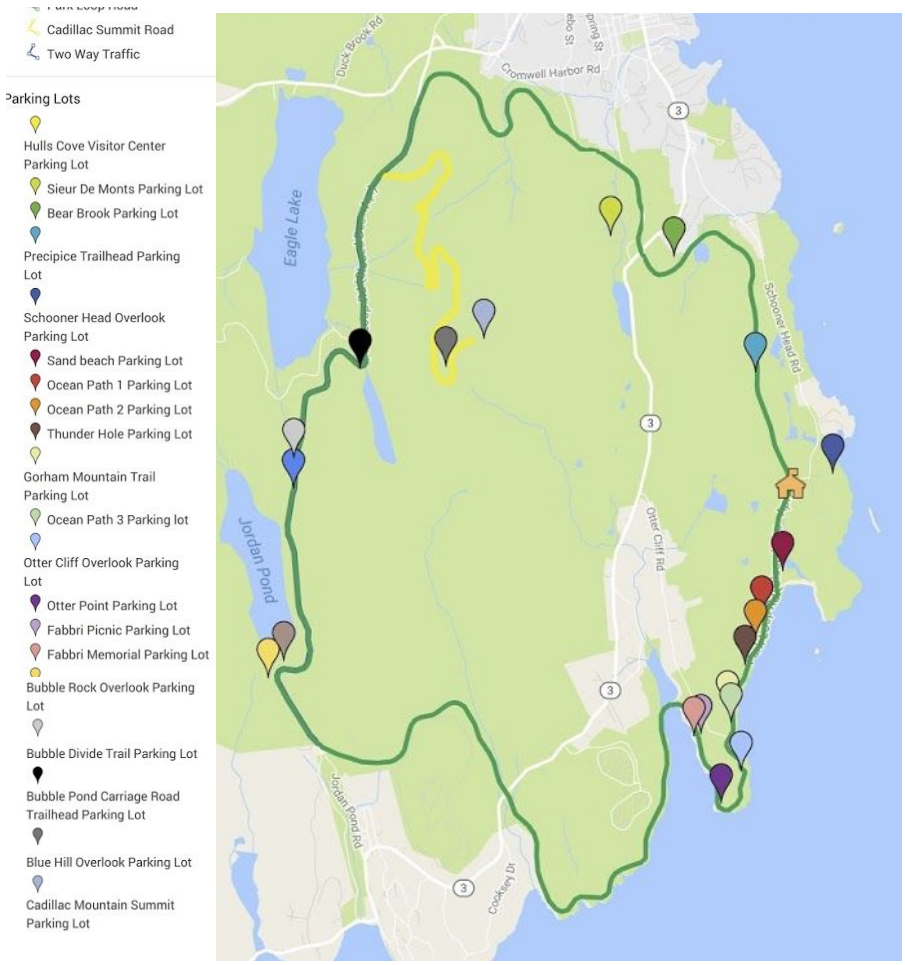

Figure 3: Parking lots located along Park Loop Road.

Data Collection

Since its founding in 1916, Acadia National Park has maintained extensive recreational visitor use statistics, which are publicly available on the National Parks Visitor Use Statistics website. These data are accurate but not comprehensive. For example the 2015 Cadillac Mountain traffic report states that 259,000 vehicles and 777,000 visitors went to Cadillac Mountain between May 1 and October 30 (Jacobi, “Vehicle Traffic…” 2016); however, there is no data on exactly where these vehicles

and visitors are entering the park. In addition the park provides a set of multipliers used to tally visitors, but the data collection method is unpublished. There are several commonly used methods of traffic data collection that could be feasible given Acadia's traffic conditions: manual counting, pneumatic road tubes, and video image detection.

Previously Proposed Solutions

In the past the park has tried various temporary solutions to the traffic congestion issue. The first attempt at alleviating traffic congestion was in 1992 when the Island Explorer was implemented. The Island Explorer is a fare-free, seasonal bus system that has eliminated an estimated 2 million private vehicle trips. However, the Island Explorer's passenger capacity does not meet the current needs of the volume of visitors to the park (Schreiber 2015).

In 2015 park officials held two "car-free days", when no motor vehicles, excluding the Island Explorer buses and local tour buses, were allowed on any park roads. This let visitors enjoy the beauty of the park without the noise or overcrowding of the usual traffic. It also showed officials how many people would take advantage of public transportation when they could no longer use their cars (Kelly April 2015). Unfortunately, the two scheduled car-free days in 2016 occurred in May and September, so the team was not able to take advantage of them for data collection.

The opinions of the locals are highly valued by Acadia's staff. This prompted the park to hold its own town meetings, beginning in June 2015, to discuss the traffic issue with residents of Bar Harbor. Some ideas that have been raised include the

construction of a Cadillac Fee Station, experimental “cruise ship bus-free days”, and the institution of a trolley system (Trotter Sept. 2015). The Park’s goal is to have a traffic management solution slated for 2018 (Billings 2015). Future teams may be inclined to collect such ideas from the Bar Harbor locals in order to gain insight into their view on the problem.

Previous counting systems used within the park, such as the Intelligent Transportation System, had the goal of providing real time information about vehicles entering and the traffic flow within the park. However, the system never fulfilled this goal and is now obsolete and cumbersome to use as the data cannot be extracted on location in Acadia National Park. (Jacobi, “Personal Interview” 2016)

Solutions Implemented in Other Parks

Examples of other solutions can be found at other national parks. In response to similar traffic issues, Yosemite National Park investigated several possible solutions. One proposed solution was a vehicle registration system that would restrict vehicle access during peak seasons to only those who registered their vehicles (Yosemite Overcrowded 2012). Another proposed plan was the use of controllable signs to divert traffic during major seasons (Yosemite Overcrowded 2012). A third proposed plan was to incentivize the use of the park operated bus system rather than visit by car (Yosemite Overcrowded 2012).

Like Acadia National Park, Yosemite, and many parks nationwide, Zion National Park has also experienced issues with overcrowding and traffic congestion. In the

1990s, up to 5000 cars might travel through Zion Canyon daily, far more than the park's infrastructure was ever designed to accommodate (Mace, Marquit, and Bates 2013). To manage this problem, in May 2000, Zion implemented a mandatory shuttle system, which ran from May through October. In its first year, this shuttle system served around 1.5 million visitors, and this number has increased steadily since. It was at first met with reservation from park visitors, only 65% of whom considered it successful in 2000, but by 2003 that rating had increased to 91% (Mace, Marquit, and Bates 2013). Over time, the visitor satisfaction continued to improve for both shuttle use and park experience once the mandatory shuttle became an accepted method of transportation within the park (Mace, Marquit, and Bates 2013).

This approach, however, could be unsuccessful in Acadia because visitors value their freedom and, at least initially, react poorly to leaving their cars (Mace, Marquit, and Bates 2013). Vehicles, for some visitors, are a way to experience the park, and are not merely transportation (Hallo and Manning 2009). Experientially, this is verified along the scenic Ocean Drive where vehicle operators were surveyed about their purpose on the road (Hallo and Manning 2009). Answers ranged from the efficient, "to see or get to specific sites" to more relaxed activities such as, "to go on a leisurely drive" and "to see beautiful scenery" (Hallo and Manning 2009). Visitor goals such as these could lead to opposition to a mandatory shuttle system (Hallo and Manning 2009). Ocean Drive proves to be both a needed road for transportation throughout the park, and also one that visitors want to experience (Hallo and Manning 2009). If a mandatory shuttle was implemented, to be successful it would need to meet both

needs that vehicles fulfill: transportation and experiencing the park. As of 2015, Acadia National Park has stated that the transportation plan being implemented will not remove cars from the park or institute a park-wide ferry system (Kelly Summer 2015).

Environmental Impact

As tourism increases, the need to make sustainable choices to protect Acadia also increases. For example, Acadia received a failing grade from the National Parks Conservation Association (Kennedy 2015). Increased visitation results in increased greenhouse gas emissions. This climate change results in increased erosion, the endangerment of native species, and the introduction of invasive species (Kennedy 2015). In addition, large numbers of visitors can directly damage fragile wildlife, prompting park officials to restrict pedestrian activity in certain areas of the park. However, there are many steps being taken by the park to sustainably preserve the island. Some examples include local businesses "going green", the Island Explorer cutting down on the number of vehicles and fossil fuel emissions, and the placement of recycling containers within Bar Harbor (Bar Harbor Chamber of Commerce).

Fee Collection

Visitors to Acadia National Park must pay a fee when entering the park between May and October, of which 80% goes directly into the park's budget, regardless of how they enter the park. The remaining 20% of fees are shared with the National Park Service (National Park Service Visitor Use Statistics). A 2012 study found that just 70%

of bus riders paid a park entrance fee (Crikelair 2012). In 2014, in response to an estimated 68% fee compliance rate, the Park Service bolstered efforts to inform visitors of the entrance fee requirement and instructed park rangers to begin distributing information cards to those vehicles parked without a visible permit (National Park Service Visitor Use Statistics). A picture of the seven-day vehicle pass is located in Figure 4 below. Rangers also began ticketing visitors who did not display their passes, with this effort increasing in 2016. Tickets were also given to cars that parked in spots registered for motorhomes and buses only.

Park passes can be purchased throughout the park and local area. The locations where all passes can be purchased are: Hulls Cove Visitor Center; Sand Beach Entrance Station; Thompson Island Information Center; Bar Harbor Village Green Information Center; Park Headquarters; and Blackwoods, Schoodic Woods, and Seawall Campgrounds. The following locations can issue some, but not all, park passes: Cadillac Mountain and Jordan Pond Gift Shops; Mount Desert Town Office; Bar Harbor Chamber of Commerce on Cottage Street; Southwest Harbor/Tremont Chamber of Commerce; and the L.L. Bean located in Freeport, Maine. Annual and weekly passes are also available to be purchased online. Interagency passes can be purchased at any park entrance station. These locations are located on the map below, Figure 5. (United States National Park Service)

Park passes are hung from the rear view mirror or left on the dashboard. Motorcyclists most often carry their passes to display if prompted or questioned by an

official. Table 1 lists the costs and descriptions associated with the passes accepted in the park.

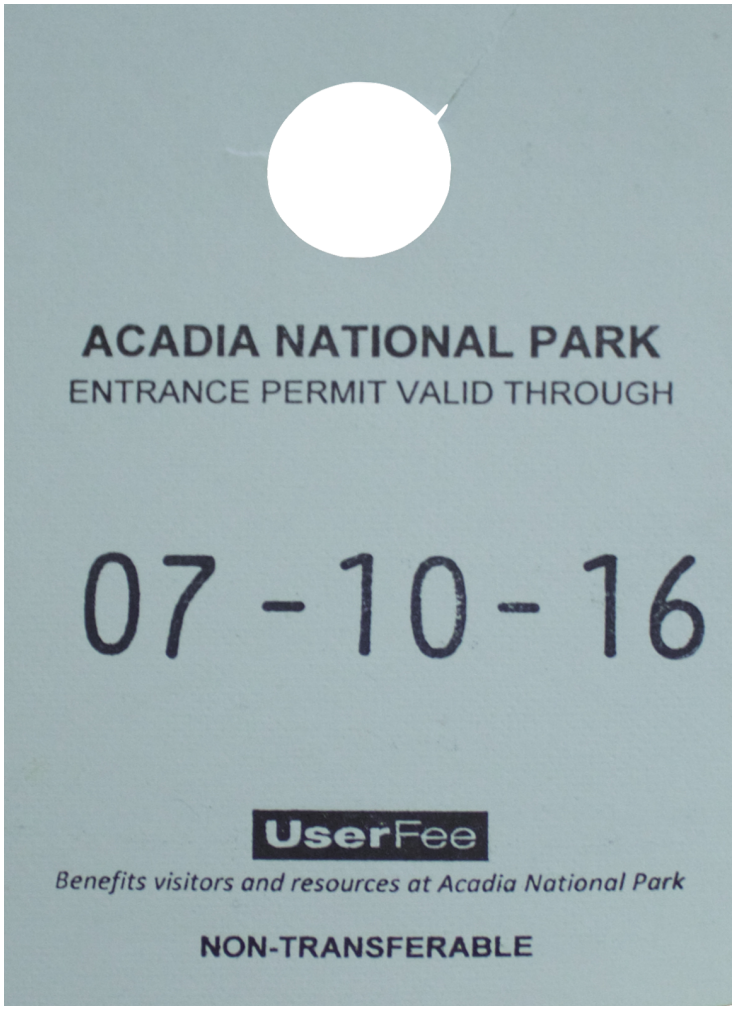

Figure 4: An image of the Private Vehicle Pass that is valid for seven days of entrance to Acadia National Park. This pass costs $25.

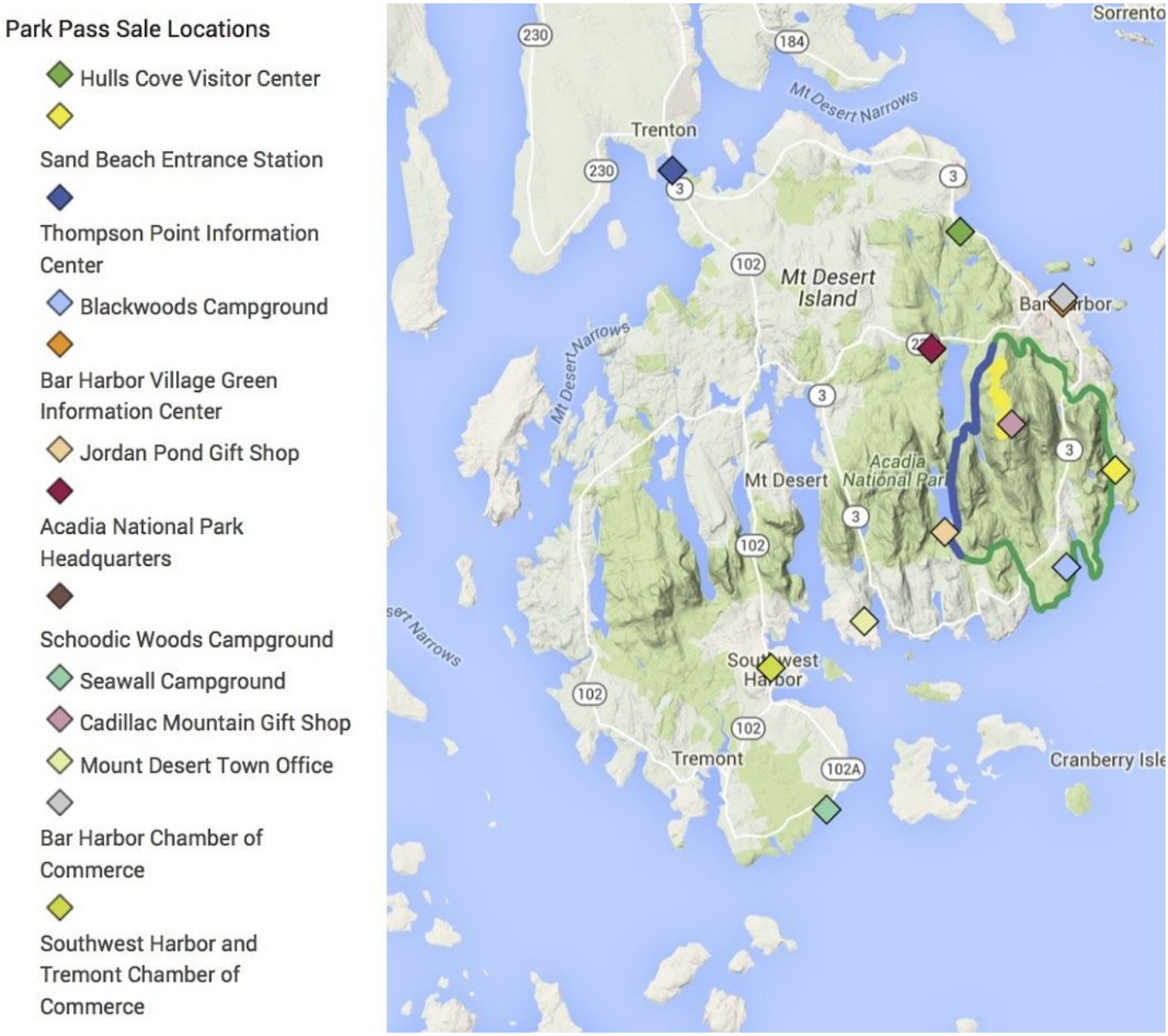

Figure 5: A map of the locations where Acadia National Park passes can be purchased. Not pictured: L.L. Bean in Freeport, Maine. Also note, any Interagency Pass can be purchased at any national park or national monument.

Table 1: Cost and description for the passes accepted in Acadia National Park. (United States National Parks Service)

Type of Pass	Description of Pass	Cost
Private Vehicle (Valid for seven days)	Admits private, noncommercial vehicle with 15 passengers or less and all occupants	$25
Motorcycle (Valid for seven days)	Admits one or two passengers on a private, noncommercial motorcycle	$20
Per Person (Valid for seven days)	Admits one individual with no car (bicyclist, pedestrian, hiker	$12; Youth 15 and under free
Annual Pass (Valid for 12 months from purchase)	Provides access to Acadia National Park only; admits the passholder and passengers in a noncommercial vehicle	$50
Interagency Annual Pass (Valid for 12 months from purchase)	Allows access to and use of any Federal recreation site with an Entrance or Standard Amenity Fee; admits the holder and passengers in a noncommercial vehicle at per vehicle fee areas and the holder +3 adults at per person fee areas	$80
Interagency Annual - Military Pass (Valid for 12 months from purchase)	For active duty military personnel and their dependents with valid documentation; allows access to and use of any Federal recreation site with an Entrance or Standard Amenity Fee; admits the holder and passengers in a noncommercial vehicle at per vehicle fee areas and the holder +3 adults at per person fee areas	$0
Interagency Annual Volunteer Pass (Valid for 12 months from purchase)	For volunteers acquiring 250 service hours on a cumulative basis; allows access to and use of any Federal recreation site with an Entrance or Standard Amenity Fee; admits the holder and passengers in a noncommercial vehicle at per vehicle fee areas and the holder +3 adults at per person fee areas	$0
Access Pass (Valid for life)	For U.S. citizens or permanent residents with permanent disabilities; allows access to and use of any Federal recreation site with an Entrance or Standard Amenity Fee; admits the holder and passengers in a noncommercial vehicle at per vehicle fee areas and the holder +3 adults at per person fee areas	$0
Senior Pass (Valid for life)	For U.S. citizens or permanent residents over the age of 62; allows access to and use of any Federal recreation site with an Entrance or Standard Amenity Fee; admits the holder and passengers in a noncommercial vehicle at per vehicle fee areas and the holder +3 adults at per person fee areas	$10
Every Kid in a Park 4th Grade Pass (Valid from September the year the child starts 4th grade until the August of the following year)	For U.S. 4th grade students; allows access to and use of any Federal recreation site with an Entrance or Standard Amenity Fee; admits the holder and passengers in a noncommercial vehicle at per vehicle fee areas and the holder +3 adults at per person fee areas	$0

Gaining Access to the Park

Most traffic that enters Acadia National Park travels along the one-way Park Loop Road. The National Park Service offers eight on-site locations to purchase tickets for the park, however, the most profitable by far is the Sand Beach Entrance Station which is strategically positioned just 0.6 miles before the beach. The only way to reach Sand Beach, Thunder Hole, and Ocean Drive is to pass through this station. However, the other 90% of Park Loop Road is easily accessible without purchasing a pass. In addition, people can access the entirety of Park Loop Road without a pass when the fee station is unmanned.

3 Methodology

This project proposed possible traffic management solutions for increasing the fee compliance rate, after collecting data through a variety of road traffic data collection methods. In order to accomplish this task, the following objectives were decided upon:

Objective 1: Explore and implement methods of collecting visitor entrance and pass compliance data in Acadia National Park.

Objective 2: Analyze the collected data to identify patterns and connections between entrance traffic and visitor pass compliance.

Objective 3: Use the collected data to recommend solutions to the park pass compliance issues.

To accomplish the first objective, road traffic data collection methods were implemented along Park Loop Road, a road that is host to the most heavily trafficked locations in the park. Parking lots along Park Loop Road were selected with the following considerations: association with popular attractions, a control group accessible via the Sand Beach Entrance Station, and lots accessible via a non-gated entrance. The lots in the control group are: Sand Beach; Sand Beach Upper; Ocean Paths 1, 2, and 3; Thunder Hole; and Gorham Mountain Trail. The lots accessible via an entrance without a toll station that were monitored are: Schooner Head Overlook, Otter Point, Otter Cliff, Fabbri Picnic Area, Fabbri Memorial, the two parking lots for Jordan

Pond House, and the two parking lots on Cadillac Mountain. All the parking lots the team counted compliance in are located below in Figure 6.

Road traffic data were collected at access points along Park Loop Road to determine the number of visitors entering at a given access point. The various data collection sites can be seen in Figure 7.

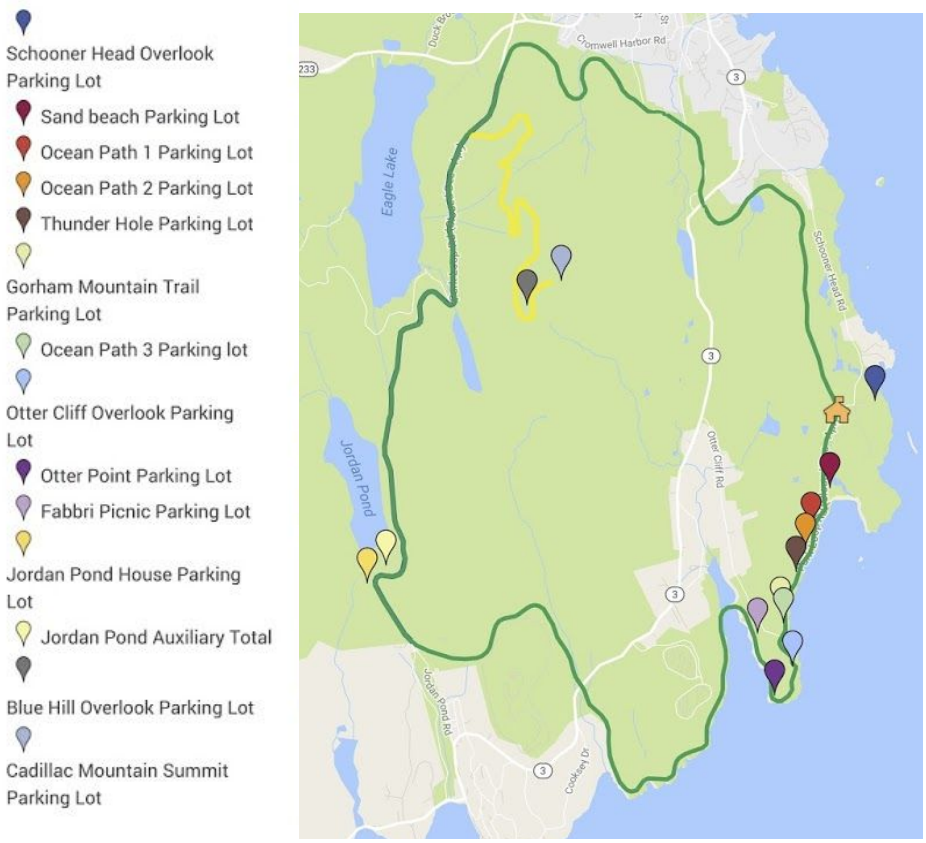

Figure 6: Parking lots counted by the Tourist Impact Team.

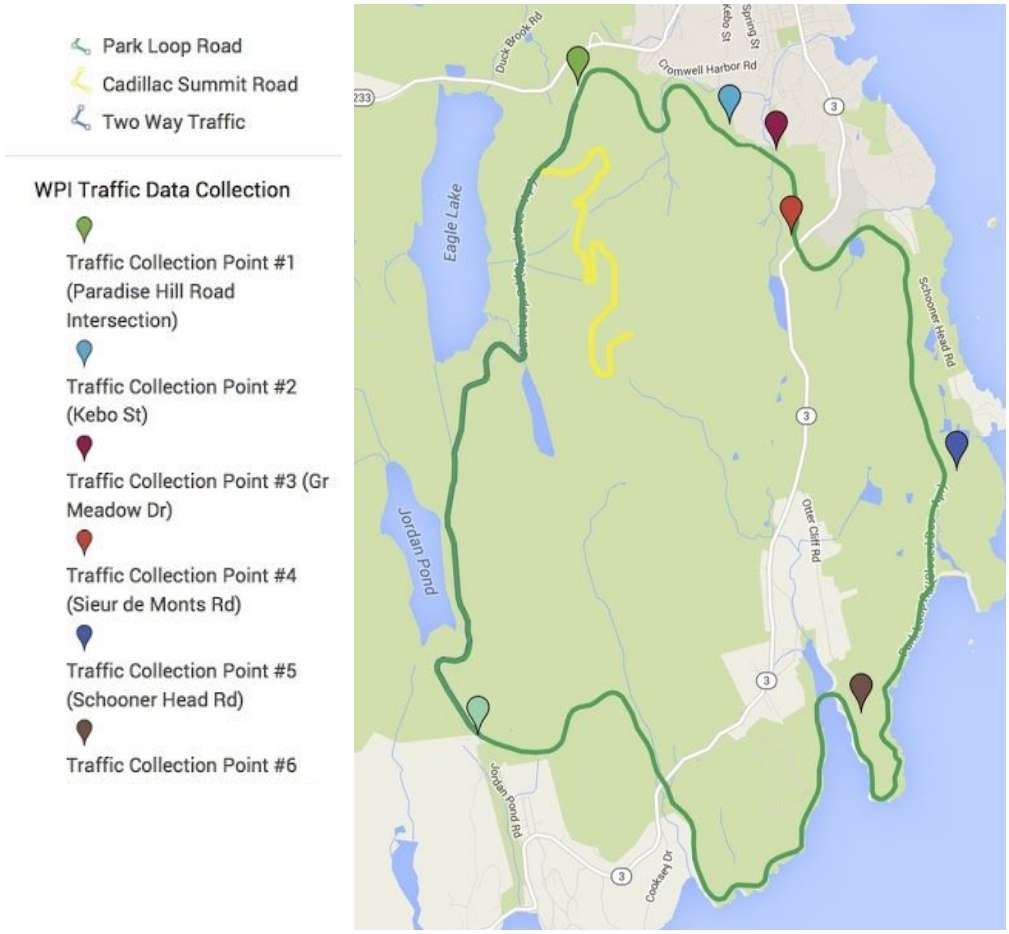

Figure 7: Locations of the seven deployed sensors at the entrance to Park Loop Road.

Data Collection Methods

A variety of data collection methods were investigated to quantify hourly entry rates and park fee compliance. Of the methods explored, the most feasible were selected to be employed by the team for counting entrance data and parking lot compliance.

Traffic Counting

In order to gather the data on traffic within the park, several options were explored. Included were: manual counting, pneumatic tube sensors, and the use of cameras to automatically count cars.

Manual Counting

Manual counting is low-cost and capable of collecting detailed data, but its longevity is limited. Manual counting of traffic was employed very few times to verify the accuracy of the pneumatic tube sensors, however manual counting of pass compliance was repeated at three times per day for two days for each parking lot observed.

Pneumatic Tube Sensors

Pneumatic tube sensors are a means of counting cars autonomously. Rubber tubes are placed across a single lane and connected to a sensor placed on the side of the road as seen in Figure 8 below. The sensor detects pulses of air when a vehicle passes over the tube. These sensors can gather data for longer periods of time than would be possible with manual counting; however, they are less effective in heavy traffic (Leduc 2008). Pneumatic tubes were placed at seven entrances to Park Loop Road. They are as follows: Paradise Hill Road, Kebo Street, Great Meadow Drive, Sieur de Monts Road, Schooner Head Road, Otter Cliff Road, and Stanley Brook Road.

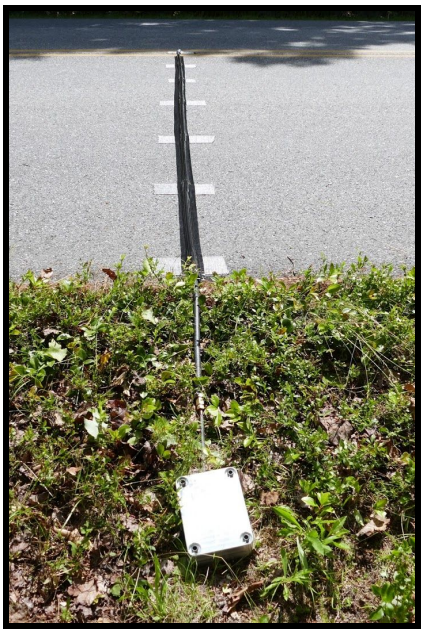

Figure 8: A pneumatic tube sensor deployed in the field in Acadia National Park. The tube covers one lane of traffic and is secured to the asphalt using road spikes, road tape, and Gorilla tape.

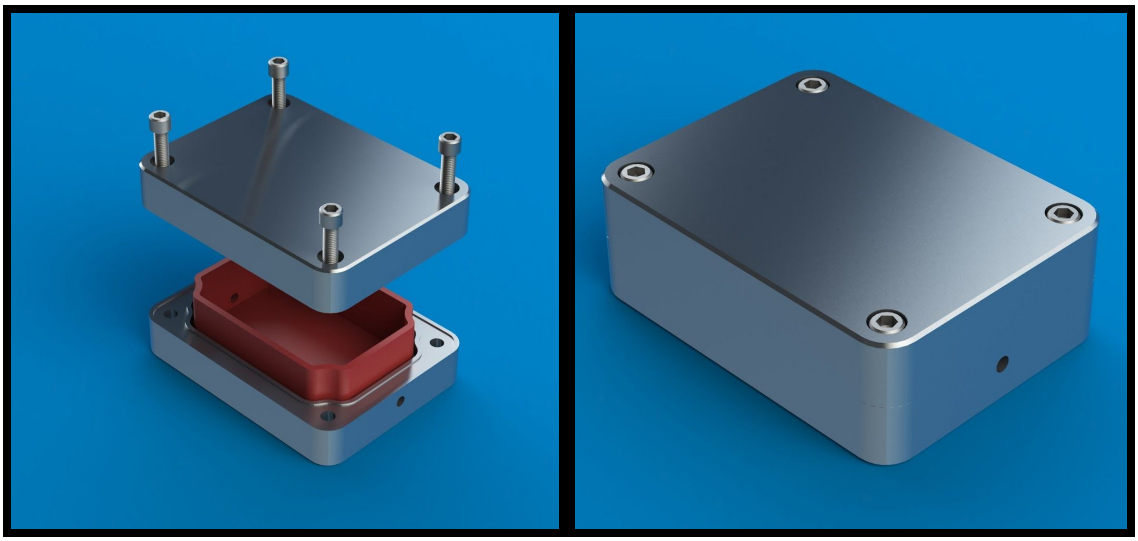

Figure 9: Prototype casing and inner carriage of the pneumatic tube sensor.

The sensors were designed by the team to be waterproof, durable, and modular. The primary electronics box was constructed to withstand long periods of data collection in any environment. The design was created such that the inner electronics

were easily accessible for maintenance and repair. The casing was constructed out of two pieces 6061 aluminum bar and fitted together with a gasket for waterproofing. Images of the case design can be seen in Figure 9. With ½” thick walls, the case could withstand being run over by a vehicle. A polyethylene tube extended from the case where it was connected to 5/16” ID SAE30R7 rubber tube using brass barbs. When a car drove over the tube, a pressure increase was registered by a pressure sensor. Using this method, the team was able to count the total number of axles crossing the sensor in the lane entering Park Loop Road.

In order to detect the pressure change when a car drove over the tube sensor, an MPX5500DP differential pressure sensor was used. An image of the sensor and the inner electronics can be found below in Figure 10. This sensor provides an analog output voltage based on the difference in the air pressure measured at two points. For the purposes of the sensor used by the team, pressure within the air tube was compared to the ambient atmospheric pressure. The voltage change from the pressure sensor varied from 0V to 5V, linearly proportional to the pressure change detected by the sensor. The output from the sensor was wired to analog pin 1 on the Arduino microcontroller. In order to allow for variance in ambient conditions between sensor locations and make the sensors easily adjustable, a calibration, or reference, voltage was necessary. This reference was provided by a 50 kΩ potentiometer in a voltage divider setup and attached to analog pin 0, shown in Figure 11. In order to assist in manual calibration, a red LED was wired to digital output 2 on the microcontroller, and programmed to flash whenever the sensor detected a car driving over the tube.

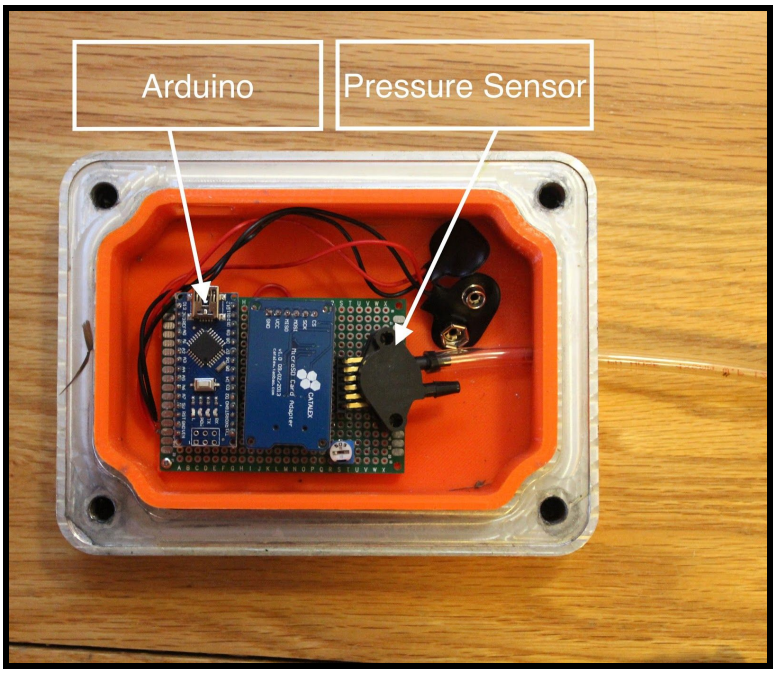

Figure 10: Inner electronics of the pneumatic tube sensor.

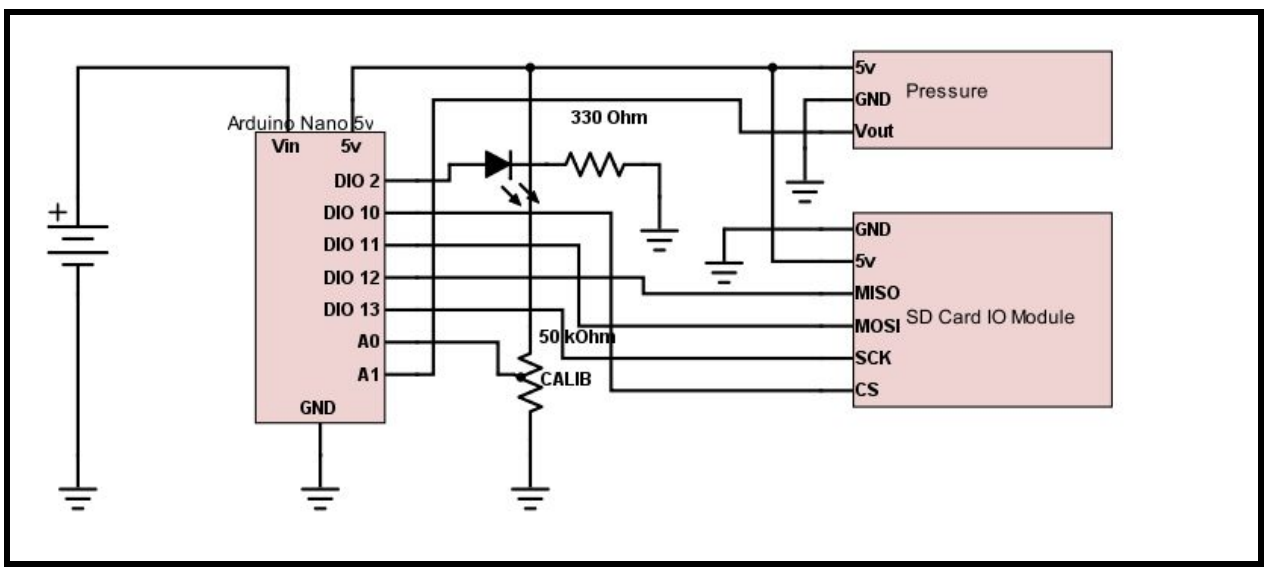

Figure 11: Reference potentiometer schematic.

In order to record the data that the sensors produced, a Catalex SPI interface board in a master-slave relationship with the Arduino, pictured above in Figure 11, was

used to allow the use of a micro SD card. From the SD interface, the chip select pin was attached to digital IO (DIO)pin 10, the master out slave in pin (MOSI) was attached to DIO11, the MISO pin was attached to DIO12, and the synchronization signal was attached to DIO13. Data was stored on a 4GB microSD memory card.

Seven sensors were manufactured and assembled over a period of two weeks. The manufacturing process for the case was designed using Esprit, an industry leading CAM software, to maintain the desired accuracy while limiting the required man hours. To accommodate this, a Haas VM-2 vertical CNC milling machine was programed with multiple automatic probing cycles to combine the three required milling operations into two. Additionally, operations were optimized for high speeds and low tool wear using profit-milling. These techniques were used to machine the two unique two operation parts required for a single case in just under two hours. Included in Appendix B are complete machine reports for each of the four operations. The final casing is pictured below in Figure 12.

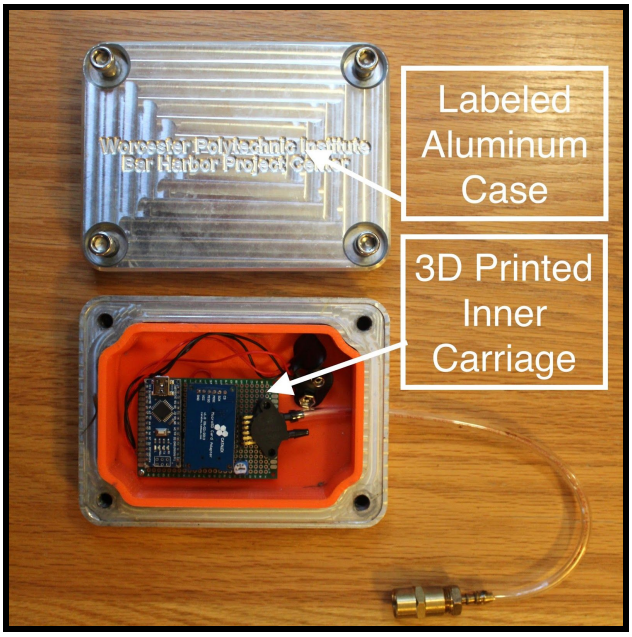

Figure 12: The completed sensor.

Testing Sensor Accuracy

Before deploying the sensors in Acadia National Park, the team determined a baseline for their accuracy by testing them in conditions similar to those scenarios they would encounter in the field. Given that sensors were to be deployed across one lane of two lane traffic, the rubber tube was stretched across a 12 foot paved surface as two cars were driven over the sensor to test how the sensor responded to the stimulus. By varying car speed and separation, the team was able to simulate several scenarios that the sensors encountered upon deployment. Scenarios were distinguished by letters A through D.

Table 2: Accuracy tests scenarios for the pneumatic tube sensors.

Scenario A	Scenario B	Scenario C	Scenario D
One car, 35 MPH	Two sequential cars, roughly 3 car lengths apart, 35 MPH	Two sequential cars, roughly 1 car length apart, 35 MPH	Two sequential cars, closely packed, 10 MPH
	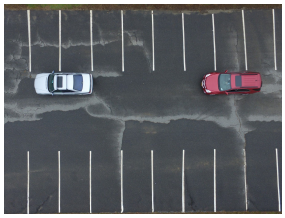	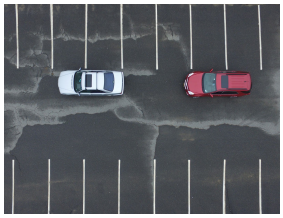	

After analyzing the data, the results of these tests indicated that the sensor is 98.75% accurate with 79 out of 80 axles being registered and recorded.

After sensors were deployed, a manual accuracy count was conducted for the Paradise Hill Road sensor. A member of the team sat next to the active counter and observed the traffic volume for approximately one hour during high traffic hours. The sensor registered 293 cars out of the 290, an accuracy rating of over 98%.

Deployment of Sensors

The deployment of the seven sensors can be broken down into three steps: scouting; placing; and maintaining. Scouting began prior to the teams arrival in Acadia National Park. The team constructed a map of existing inductive loop sensors, parking lots, and seven locations where visitors can enter Park Loop Road. Once on location, the seven entrance roads were driven and measured to determine placement and length of tube needed. Location at each entrance was decided based on the curvature of road, distance from intersection, and best location to get all cars before a turn off into the park. The curvature of the road is critical as cars going too slow will not be picked up by the sensor and if the axle hits the tube at different times, too many axles could be recorded. Distance from intersection is an important factor as with the curvature of the road due to cars slowing down to stop not being picked up by the sensor. By placing the sensor before the road splits into different pull offs, like at the Otter Cliffs entrance, all cars can be accounted for regardless of if they enter Park Loop Road before or after Otter Point from that entrance which can be seen in the map in Figure 20.

The tubes were placed first. Figure 13 shows the tube being placed at Paradise Hill Road. This was done by taking the measured tube to the proper location. Once laid

out on the road, each end was secured down using a nylon strip and nails. Roadway tape was then placed approximately every two feet with multiple layers over the metal end cap to prevent damage to vehicles should the end cap be driven over. The final layer of security was a layer of Gorilla Tape. This process was repeated at each of the locations. After all the tubes were in place and the hardware complete, the sensors themselves were placed and attached to the tube using ¼” to ⅛” brass barbs seen below in Figure 14.

Figure 13: Installation of tube on Paradise Hill Road.

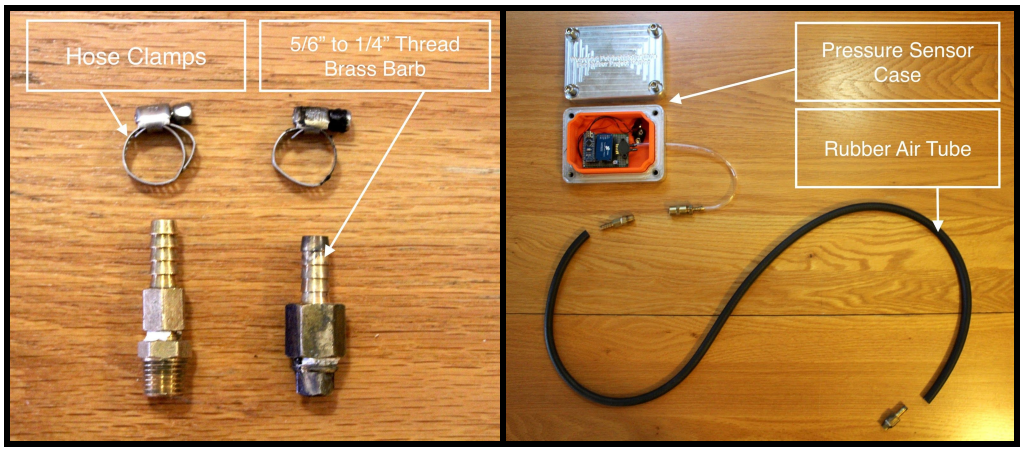

Figure 14: Brass barbs and complete sensor setup.

Because these sensors were battery operated with a life of approximately 20 hours when using one nine volt battery, each day the sensors needed to be maintained. This included changing the batteries and the SD cards to retrieve the data. Due to a lack of an internal clock, each time the SD card was changed or the power reset, the time needed to be recorded to match the log of axles to their timestamps. Occasionally sensors need to be recalibrated during these maintenance outings. In addition, data could potentially be skewed if cars did not actually go over the pressure tube, instead swerving to avoid it.

Each sensor location brought forth its own challenges. The Paradise Hill Road entrance, which is the major entrance to Park Loop Road from part of Maine State Route 3 and the Hulls Cove Visitor Center was challenging to place because of the high amount of traffic during the day. This required members of the team to direct traffic while other members installed the tube. Figure 15 shows a map of the location of this sensor.

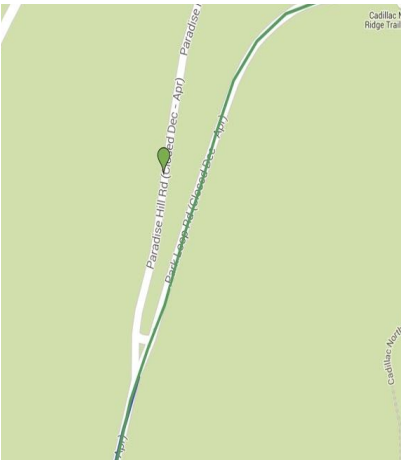

Figure 15: A close up of the Paradise Hill Road sensor location.

The second entrance location moving with the flow of traffic around Park Loop Road is located on Kebo Street. Due to lower traffic here, this sensor was easier for the team to install. One possible error in the data at this location could result from cars that drive to the small parking area next to the Kebo Valley Golf Course, but do not actually enter Park Loop Road. The map in Figure 16 shows a close up of the location the sensor was placed.

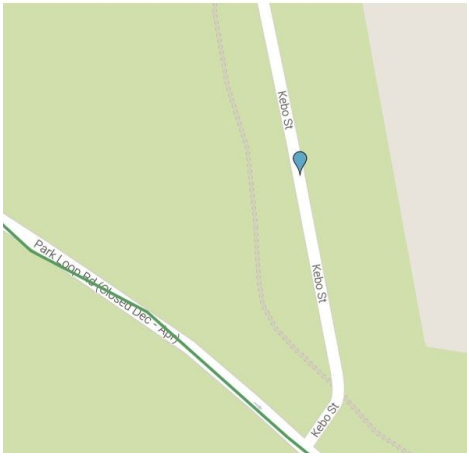

Figure 16: Close up map of the location of the Kebo Street sensor.

The Great Meadow entrance, like Kebo Street, was easy to install due to low traffic. The following image, Figure 17, shows a close up of the location of this sensor.

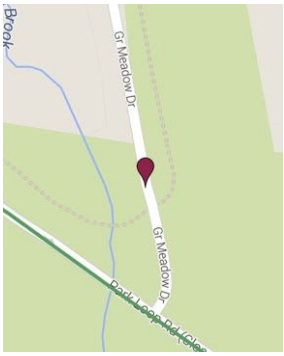

Figure 17: A close up map of the location of the Great Meadow Drive sensor.

The Sieur de Monts entrance, located right next to the Wild Gardens of Acadia and Abbe Museum, is another popular intersection where the higher traffic levels made installation of tubes challenging. Possible errors in the data for this location include inaccuracy due to slower speed at the intersection and doubled counts due to a noticeable curve in the road. The map below shows the location of this sensor.

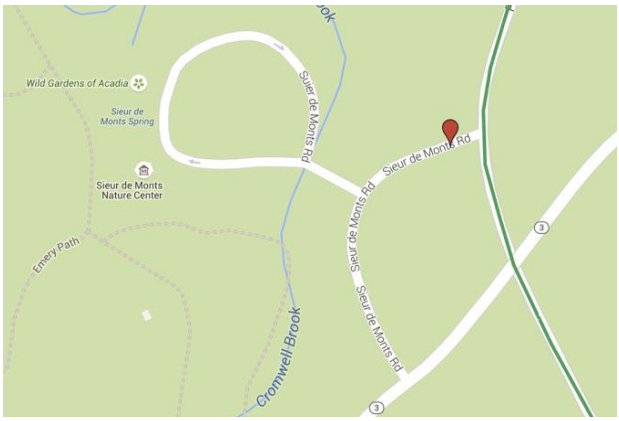

Figure 18: A map of the Sieur de Monts sensor location.

The Schooner Head Road entrance is located right before the Sand Beach Entrance Station where park passes can be purchased and where passes are checked before entering the park. This entrance is also the last access point to Park Loop Road before some of the most popular attractions in the park: Sand Beach and Thunder Hole. Figure 19 below depicts a map of the location the Schooner Head Road sensor.

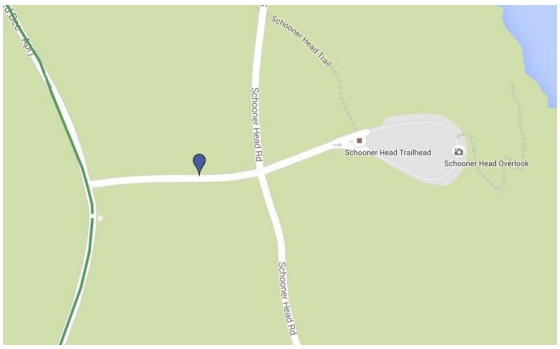

Figure 19: A map of Schooner Head Road entrance with sensor location.

The Otter Cliff sensor is placed on the straightest portion of road before the turn for the Fabbri Picnic Area. This allows for the sensor to collect all the cars entering regardless of if the cars are headed to Otter Point or if they are headed through the Fabbri Picnic Area toward the Stanley Brook entrance. Attractions accessible by entering Park Loop Road at Otter Cliffs Drive include Wildwood Stables, Bubble Rock, Jordan Pond House, and Cadillac Mountain. Below is a map of the location of the sensor.

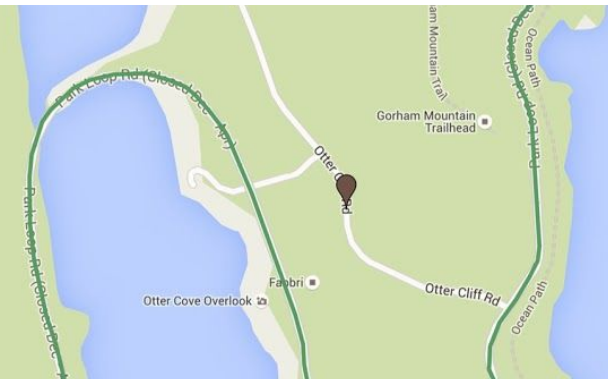

Figure 20: Location of the Otter Cliffs Road sensor. This sensor is strategically placed to count traffic that goes to Park Loop Road by continuing on Otter Cliff Road or through the Fabbri parking lot.

The Stanley Brook Road sensor was the most difficult to place. This is because the stretch of road was covered in dust and gravel, making the tape less effective, and is a more highly trafficked entrance. The tube for this sensor is also placed on a noticeable curve where the traffic is directed to turn left to enter Park Loop Road. Because this sensor is so close to a stop sign where cars slow down, this was the most challenging sensor to calibrate. A possible error in the data for the Stanley Brook road sensor is axles hitting the tube unevenly due to the curve of the turning lane. Below is a map of the location of the Stanley Brook Road sensor.

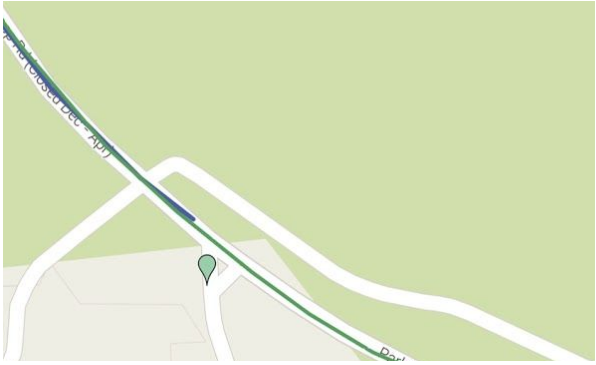

Figure 21: A map of the location of the Stanley Brook Road sensor. Note that two-way traffic begins just after this entrance.

Data Processing Software

In order to easily interpret the data retrieved from the sensors, a Java application was developed. This software integrated a file structure wherein all data was stored in a Traffic Data Project, or .TDP file, which could be created within the program. Within a TDP file, a user can create multiple “sites”, which are categories for storing the data from the sensors. Each site stored two different types of data: filters and datalogs. All filters inherit from the abstract class DataFilter, and must define methods Date[] applyFilter(Date[]), and JPanel getDataPanel(). Datalogs were the program’s means of storing the data from the sensors, and were generated by importing the .txt files the sensors generate. If a sensor’s datalog indicates multiple restarts, multiple SensorData objects were created.

This application implemented a graphical user interface (GUI) to handle interaction with the user. This GUI allowed the user to create, modify, and delete the above items by displaying them in a list, and allowing the user to select individual items

to edit, which would open a similar window. Lastly, a project could be exported to an excel file by clicking the export button. In order to export to an excel file, a simple sorting algorithm arranged each site's timestamps into an ordered list, then each site's filters were applied to the data. Lastly, a 2-dimensional array of integers was created to house hourly counts sorted by time and date, and was populated and stored in the excel file under appropriate headings using the Apache POI library (Apache 2004).

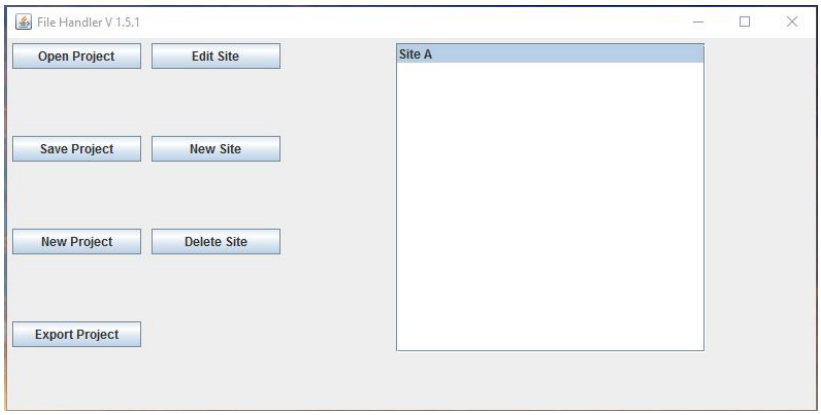

Figure 22: Main window of the software GUI.

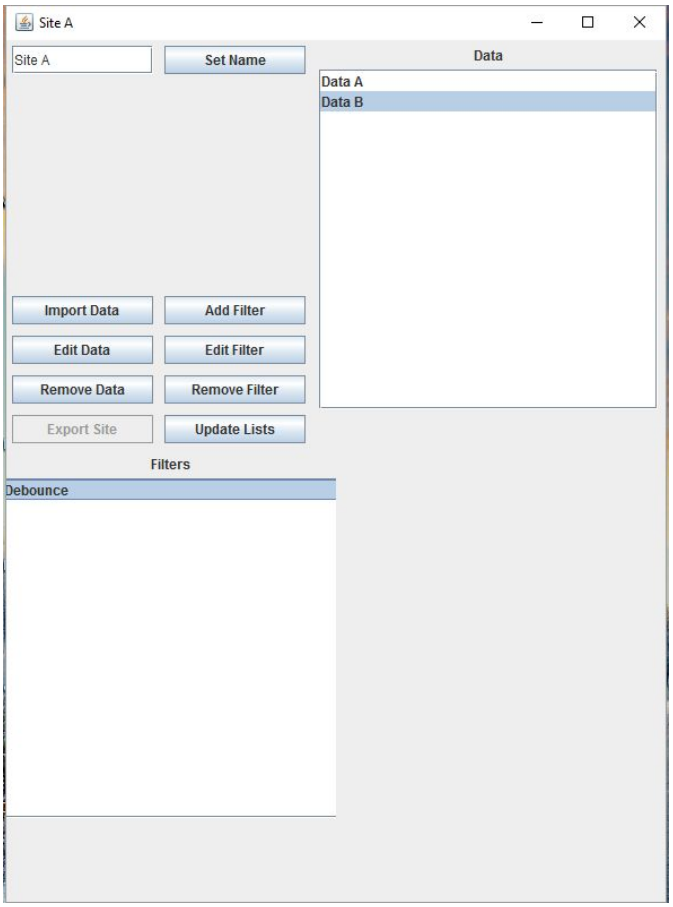

Figure 23: Edit Site window.

Cameras

An additional data collection method is image detection through the use of strategically placed cameras. Video image detection can collect data on traffic volume, speed, classification of vehicle, and even occupancy in some scenarios (Leduc 2008). The team attempted to partner with Placemeter, an emerging company known for traffic data collection, however the application for research use was ultimately rejected.

A GoPro camera was used in the initial accuracy checks of the sensors. To do this, the prototype sensor was assembled and left running in a parking area for the College of the Atlantic. The GoPro camera was fixed to a telephone pole and left recording video of the cars that drove over the tube. After leaving this setup running for approximately four hours, the number of vehicles collected by the sensor, determined by dividing the number of recorded axles by two, was compared to number of vehicles recorded by the camera. The accuracy for this count was determined to be 97%.

Issues and Troubleshooting

Throughout the deployment and use of the sensors, the team encountered multiple issues. The aforementioned 20-hour battery life meant that sensors would occasionally die before the team had a chance to replace the battery. This resulted in gaps in the collected data. Less frequently, sensors would be damaged, though rarely rendered completely inoperable, by vehicle impacts, despite being designed to withstand such stress. In the time it took to fix or replace the electronics, the sensor would be out of commission, resulting in more data gaps. The most noticeable of these

instances was when the sensor at Sieur de Monts Road sustained damage from a high speed vehicle impact, resulting in significant casing damage and rendering the main board inoperable. The only way to make the sensor fully operational again was to construct an entirely new circuit board and insert the required components; this took about a week and a half. During this time, the team decided to redeploy the electronics from the Great Meadow Drive at Sieur de Monts Road, which was a much busier, and therefore more integral, site than Great Meadow Drive. This resulted in a 10-day hole in the Great Meadow Drive data. However, the data that was collected at this location is still representative of the average usage.

Further problems presented themselves after all the data was uploaded. Looking at the data, it became evident that the sensors were sometimes miscalibrated; certain hourly counts were orders of magnitude higher or lower than the mathematical mode. These counts were struck from the data, and the average was counted from the data that remained.

Fee Compliance Checks

Fee compliance was checked at all major sites and several minor sites within Acadia National Park along Park Loop Road, at three standard times on two separate days for each location. Data were taken in sets 10:00-11:00AM, 12:30-1:30PM, and 7:00-8:00PM to obtain an approximation of the time distribution of fee compliance. These locations were the Schooner Head parking lot, the Sand Beach parking lot, the three ocean path parking lots, Gorham Mountain and Thunder Hole parking lots, the

Fabbri Picnic Area parking lot and overlook, Otter Point, Otter Cliffs, the Jordan Pond House main lot and its further auxiliary lot ("Auxiliary 1 refers to the single section of this lot closer to Jordan Pond House, while "Auxiliary 2" refers to the remaining sections of the lot), Cadillac Mountain summit lot, and Blue Hill Overlook. In addition to counting these parking lots, a sample of 20 vehicles was taken from the roadside parking by Sand Beach, which was labeled Sand Beach Overflow. Fee compliance data were obtained by checking every vehicle in the designated area for a clearly displayed park pass. Were a pass not clearly displayed, the state from which the car originated was noted by observing its license plate. Additionally, the number of available spaces in each lot was counted, which allowed for a percent capacity measurement to be determined for each site.

The times selected for counting included morning, afternoon, and evening. The morning and afternoon counts were within the operational hours of the Sand Beach Entrance Station, while the evening time was determined by the closing hour of the toll station for that day. Because the Sand Beach, ocean paths, Gorham Mountain Trail, and Thunder Hole parking lots are after the toll station, but before the next entrance to the park along the one-way road, it is assumed that all cars parked in those parking lots during the operational hours of the entrance stations should be compliant. However this was not the case. Possible reasons for the noncompliant cars during the morning and afternoon checks for those lots include: people not displaying their park pass such as storing it in the glove compartment; people entering the park before the station opens at 8:00 AM; and motorcyclists carrying their park pass as opposed to

attempting to display it on their vehicle. While accessible without entering the park via the entrance station, the other possible reason for noncompliance at both Jordan Pond House and Cadillac Mountain was visitors were purchasing a park pass from those locations.

4 Results

Entrance Data

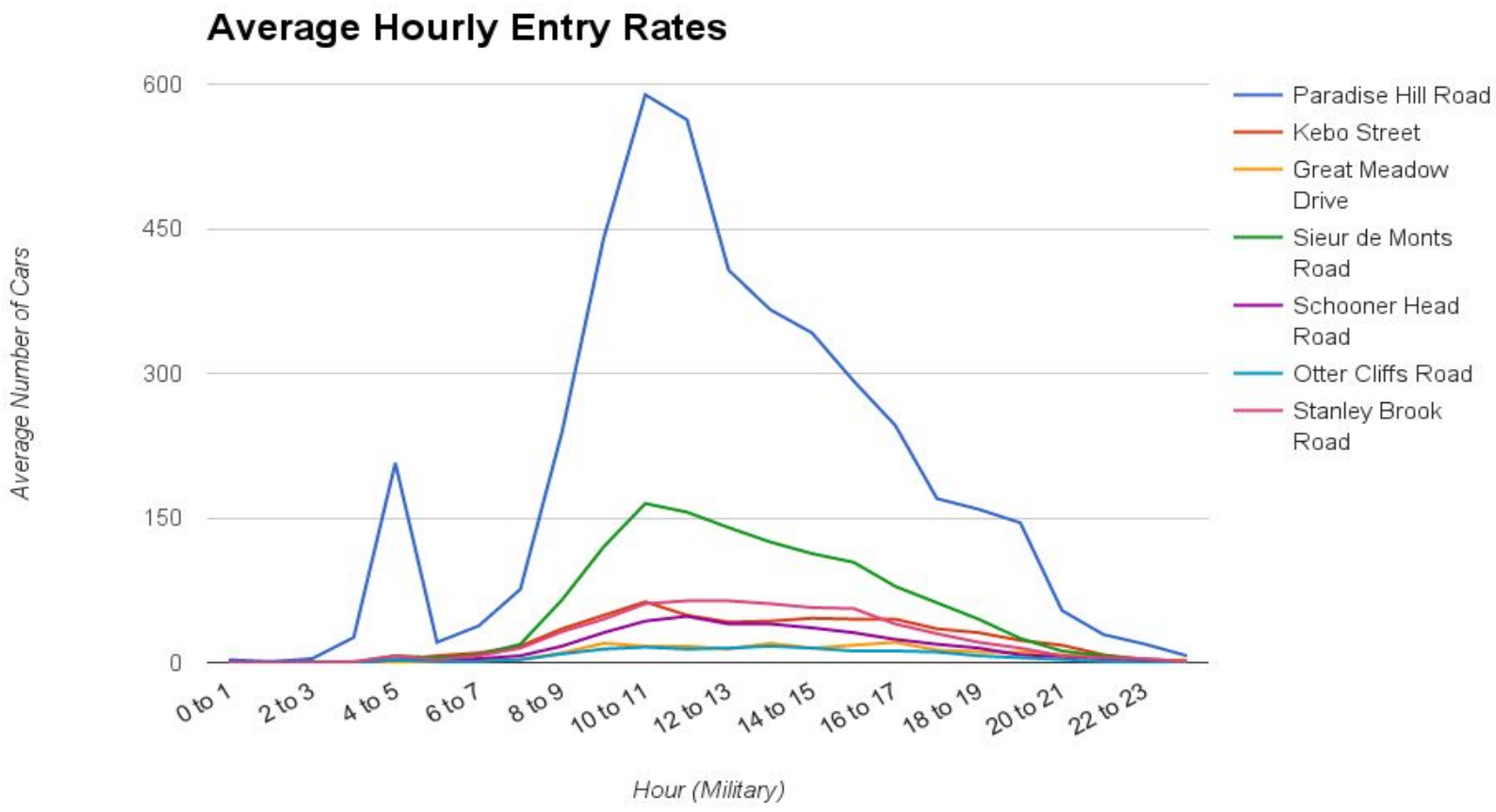

Figure 24: A graph of the average number of cars entering at each sensor location during each hour.

Table 3: Average cars entering Park Loop Road at each sensor location at each hour rounded to the nearest whole car.

Time	Location							
	Paradise Hill Road	Kebo Street	Great Meadow Drive	Sieur de Monts Road	Schooner Head Road	Otter Cliffs Road	Stanley Brook Road	Total
0 to 1	3	1	0	0	1	0	0	5
1 to 2	1	1	0	0	1	0	0	3
2 to 3	4	0	0	0	0	0	0	4
3 to 4	26	0	0	0	0	0	1	27
4 to 5	207	3	0	7	3	3	7	230
5 to 6	21	7	0	5	2	1	3	39
6 to 7	38	10	2	8	4	1	7	70
7 to 8	76	17	3	19	7	3	15	140
8 to 9	239	35	10	65	17	9	32	407
9 to 10	440	49	20	120	31	14	45	719
10 to 11	589	63	17	165	43	16	61	954
11 to 12	563	49	17	156	48	14	64	911
12 to 13	407	42	14	140	40	15	64	722
13 to 14	366	43	20	125	40	17	61	672
14 to 15	342	46	15	113	36	15	57	624
15 to 16	292	45	18	104	31	12	56	558
16 to 17	246	45	21	79	24	12	40	340
17 to 18	170	35	13	62	19	11	30	289
18 to 19	159	31	11	45	15	7	21	232
19 to 20	145	23	11	25	8	5	15	108
20 to 21	54	18	8	12	6	3	7	59
21 to 22	29	8	5	7	4	1	5	32
22 to 23	19	3	1	3	2	0	4	1
23 to 0	7	2	3	0	1	0	1	14

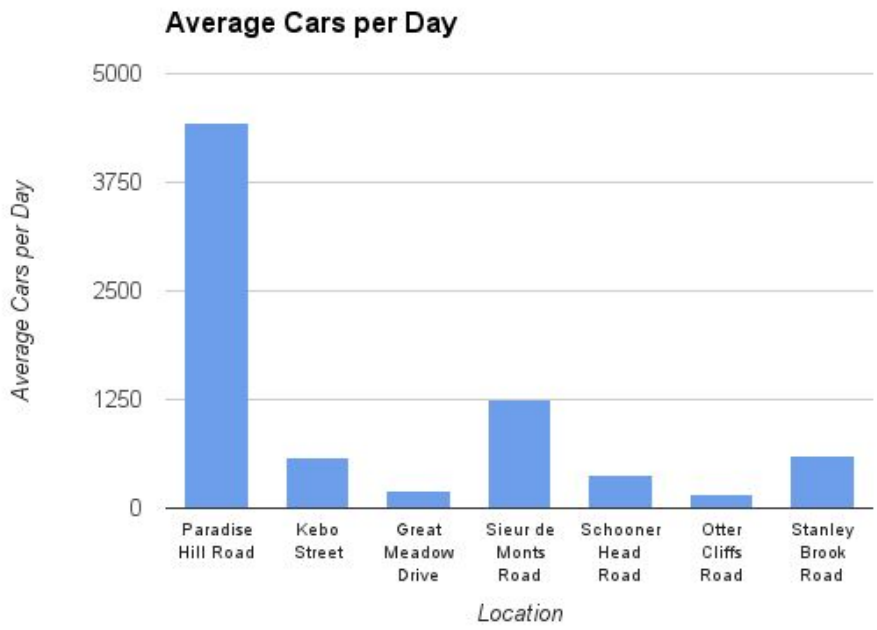

Figure 25: Average cars entering at each location per day.

Table 4: Average cars entering Park Loop Road per day.

Location	Average Cars per Day
Paradise Hill	4443
Kebo Street	576
Great Meadow Drive	209
Sieur de Monts Road	1260
Schooner Head Road	383
Otter Cliffs Road	159
Stanley Brook Road	596

Parking Lot Compliance

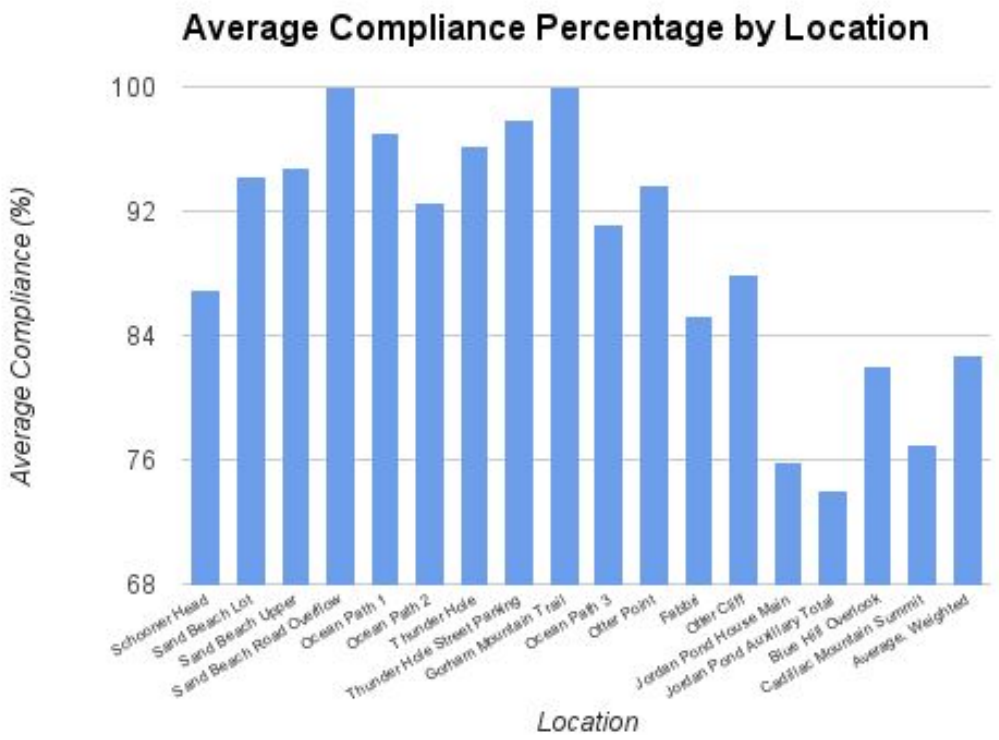

Figure 26: A graph of average park pass compliance by location of parking lot.

Table 5: Average park pass compliance by location the sample was taken.

Location	Average Compliant (%)	Average Noncompliant (%)
Schooner Head Overlook	86.9	13.1
Sand Beach Lot	94.3	5.7
Sand Beach Upper	94.8	5.2
Sand Beach Road Overflow	100.0	0.0
Ocean Path 1	93.0	3.0
Ocean Path 2	92.6	7.4
Thunder Hole	96.2	3.8
Thunder Hole Street Parking	97.9	2.1
Gorham Mountain Trail	100.0	0.0
Ocean Path 3	91.2	8.8
Otter Point	93.7	6.3
Fabbri Picnic Area	88.7	11.3
Fabbri Memorial	62.5	37.5
Otter Cliff	87.9	12.1
Jordan Pond House Main	75.8	24.2
Jordan Pond House Auxiliary Total	74.1	25.9
Blue Hill Overlook	82.0	18.0
Cadillac Mountain Summit	77.0	23.0
Average, Weighted	84.9	15.1

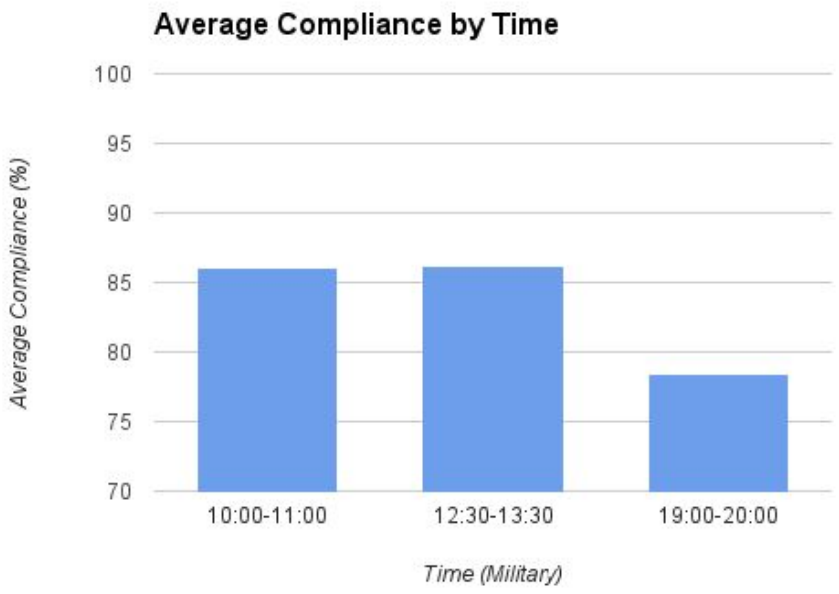

Figure 27: A graph of average park pass compliance by time.

Table 6: Average park pass compliance by time the sample was taken.

Time	Average Compliant (%)	Average Noncompliant (%)
10:00-11:00	86.1	13.9
12:30-13:30	86.2	13.8
19:00-20:00	78.4	21.6

Parking Lot Percent Full

Table 7: Average percentage full at the three counting times for all the lots. The road overflow vehicles for Sand Beach and Thunder Hole were not included in these percentages.

Location	Average Percentage Full (%)		
	10:00-11:00	12:30-13:30	19:00-20:00
Schooner Head Overlook	12.7	26.0	3.0
Sand Beach Lot	94.3	97.0	20.5
Sand Beach Upper	87.9	100.0	6.8
Ocean Path 1	52.7	81.1	1.4
Ocean Path 2	25.0	71.4	0.0
Thunder Hole	45.0	59.4	18.3
Gorham Mountain Trail	98.7	92.0	6.0
Ocean Path 3	62.5	77.5	2.5
Otter Point	51.4	54.3	7.1
Fabbri Picnic Area	25.0	69.2	7.7
Fabbri Memorial	20.0	15.0	5.0
Otter Cliff	95.0	61.7	32.5
Jordan Pond House Main	98.6	106.5	49.3
Jordan Pond Auxiliary Total	98.1	107.1	10.8
Blue Hill Overlook	46.1	21.2	130.3
Cadillac Mountain Summit	74.5	69.6	94.6

5 Analysis

The most utilized entrance by far is the Paradise Hill Road entrance with an average of 4443 cars entering Park Loop Road there per day. The least utilized is Otter Cliffs Road entrance with an average of 159 cars entering there each day. In order from most used to least used the entrances are as follows: Paradise Hill Road, Sieur de Monts Road, Stanley Brook Road, Kebo Street, Schooner Head Road, Great Meadow Drive, and Otter Cliffs Road.

The busiest times for entry are 10:00AM to 11:00AM and 11:00AM to 12:00PM with over 900 cars entering at each of those hours. The least busy times are between 12:00AM and 3:00AM with less than or equal to five cars entering at those times. A spike of on average 230 cars are seen between 4:00AM and 5:00AM as a result of visitors flocking to the park for sunrise.

Cars were found to be most compliant during the morning and afternoon counts, from 10:00AM to 11:00AM and 12:30PM to 1:30PM. The average compliance for the morning count was 86.1% and was 86.2% for the afternoon count. This is reasonable because those are within the operational hours of the Sand Beach Toll Station. Cars were least compliant in during the the evening counts, between 7:00PM and 8:00PM. The compliance for the evening count was 78.4%.

The most compliant parking lot was Gorham Mountain Trail with 100% compliance. The least compliant parking lot was Fabbri Memorial with 62.5%. However, Fabbri Memorial also had the smallest sample size due to having only ten

parking spots that were mostly empty. The Jordan Pond Auxiliary Total lot is more reasonably the least compliant with 74.1% compliance.

The average park pass compliance throughout Park Loop Road was found to be 84.9%. This average was determined by weighting data from individual parking lots to assure that the averages from larger parking lots had more influence than those from smaller lots. While this average compliance is much higher than previous estimates made by park officials of between 60% and 70%, it is important to distinguish the difference between compliance on Park Loop Road alone and compliance throughout the park.

Almost all parking lots were more full during the day than in the evening. The exceptions to this were the Blue Hill Overlook and Cadillac Mountain Summit parking lots. This is due to many visitors' desire to watch the sunset from atop Cadillac Mountain. The two parking lots associated with the Jordan Pond House are the most full, being on average over capacity every afternoon. The least used parking lots are Schooner Head Overlook and Fabbri Memorial. These lots were never observed being more than 26% full.

6 Conclusions

Possible Solutions

Increased Signage

Putting more signs in the park would be a relatively inexpensive solution, and would have a high benefit for such a low cost. Helpful signage would indicate how many parking lots are available nearby along Park Loop Road, especially in the Sand Beach and Otter Cliff area. The team found on several occasions that a lot along Otter Cliff was overflowing while another lot 500 feet down the road was completely empty. Signage could also periodically remind visitors to purchase a park pass, if they have not already done so. Anecdotal evidence shows that some park visitors are unaware of the existence of park passes, even in locations that already have signs notifying visitors of this.

Elimination of Two-way Traffic

In the late 1980s, an experiment was conducted in Acadia National Park by Park officials. This experiment consisted of changing the two-way section of Park Loop Road to be one-way for a single week. Visitors rated this configuration as improving both traffic flow and enjoyment of the park. However, the team did observe that the two-way section of Park Loop Road makes it significantly easier visitors to reach Cadillac Mountain and Jordan Pond House, two of the most popular destinations

within the Park. Additionally, such a solution may require the creation of new plans for emergency vehicle routing. (Manning 2009)

Shutdown of Entrances

The shutdown of some of the lesser used entrances to Park Loop Road is another potential solution that was discussed. This would potentially improve park congestion, since less cars could enter the park at a single time. It would also make it easier to keep track of visitors. However, this could restrict access to certain locations within the park.

RFID System

One potential solution, in which the Friends of Acadia were very interested, is an RFID-based pass system, similar to the technology used in E-ZPass systems. RFID, which stands for radio frequency identification, has two subtypes: active and passive. An active tag has an internal battery supply, while a passive tag does not (Bouet and Dos Santos 2008). E-ZPass employs an active system while an ID Card based system uses a passive system (Bouet and Dos Santos 2008). Passive RFID is smaller and cheaper, however has limited functionality compared to active; namely, a passive RFID tag can only be read, while an active tag can both be written to and read (Bouet and Dos Santos 2008). A single active RFID transponder costs about $7.80, while a passive RFID tag costs anywhere from $0.74 to $1.25 (Somerville 2016).

Ideally, an RFID solution would be used in conjunction with automatic reading technology. The price for this system ranges from $8,500 to $17,500, plus the cost of computers, wiring, and related infrastructure (Somerville 2016).

Ticket Operated Gate

Another possible solution for increasing fee compliance is the installation and use of a ticket-operated gate system, similar to those used in parking garages. These could be installed at entrances or exits to Park Loop Road, or at parking lots within the park. To open the gate, visitors would need to purchase a ticket or present a previously purchased ticket. These tickets could employ barcodes or passive RFID tags, making a gate open when the ticket is presented and allowing the car to pass through.

If placed at entrances to the Park Loop Road, ticket operated gates could increase road congestion, creating a frustrating and potentially dangerous backup. The same argument can be made for placing the gates at the entrances to parking lots. If the gates were placed at parking lot exits, the congestion would be contained to the parking lot itself. However, some parking lots do not have separate entry and exit, instead only possessing a single access point. In addition, it would be significantly more expensive to build gates at every parking lot than at every entrance to Park Loop Road.

The Team's Recommendation

In researching the various aforementioned solutions, the team decided that a combination of the solutions would best benefit the park. Chief among those is the

passive RFID system, which is the most efficient and cost-effective solution. In order to make the most effective use of a passive RFID system, such a system could be combined with strategically placed park entrance gates, allowing fees to be collected at all hours of the day. Additionally, this ensures 100% compliance without the necessity of overnight staffing.

Additionally, the closing of the lesser used entrances at Kebo Street, Great Meadow Drive, and Otter Cliff Road would reduce the setup cost of such a system by approximately $400,000. After these reductions, the total cost to set up a system would be $665,000, and annually, the system would cost $179,000, increasing with park visitation over 10 years to $200,000. This system would raise fee compliance along Park Loop Road to 100%, initially increasing revenue by $737,267. This increase in revenue alone would be enough to pay for the cost of setup, and return an initial profit increase of $78,331, based on 2017 projected figures. Over the course of 10 years, the profit gain from implementing such a system would be $5,645,989.

RFID tag windshield stickers would be distributed to any visitor entering Park Loop Road. Vehicle bound visitors would first pass under a lane kit which would identify visitors with passes. If a visitor had not yet purchased a pass or had not received an RFID tag with their online or interagency pass purchase, they would be directed to an automated payment station capable of accepting cash, credit cards, previously purchased interagency passes and online passes. Any visitor that had previously purchased a pass that had expired could refill their existing RFID pass from this station. To accommodate passive RFID technology, which can only be read from,

each sticker would carry a unique identification number associated with an account where information regarding that passes activity and eligibility would be stored. A flowchart of visitor interaction with the system can be seen in Figure 28.

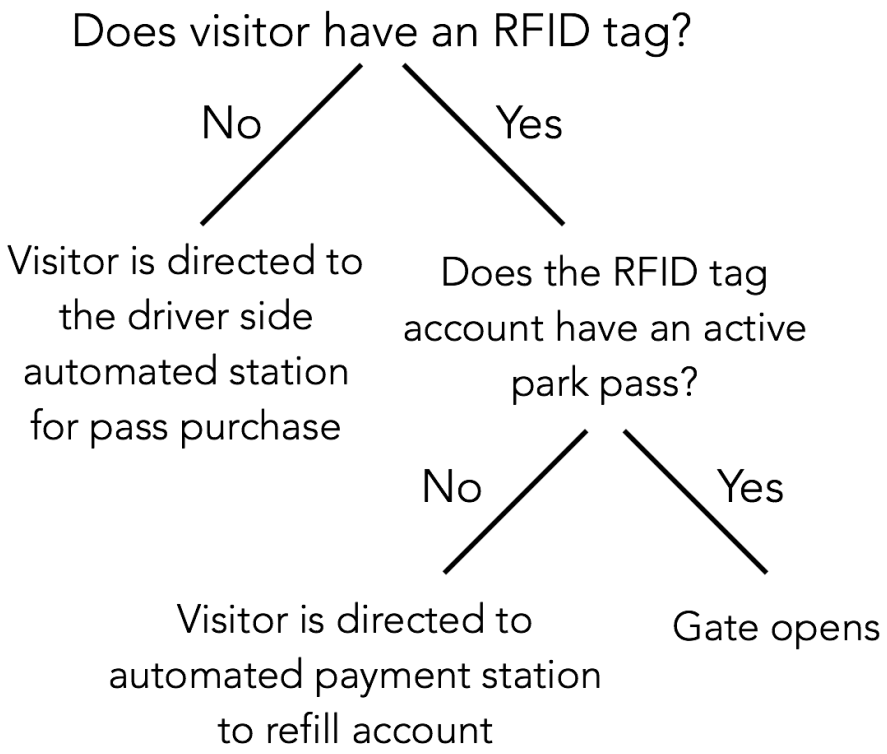

Figure 28: Flow chart explaining RFID and Barrier Gate entrance station operations.

Suggestions for Future Tourist Impact Teams

Project Direction

At the start of this project, the team was presented with three different issues related to visitor use in Acadia National Park: traffic management, fee collection, and the development of a formula or model to estimate visitor numbers. This team decided

to focus on the fee collection aspect; future iterations may wish to shift focus to another issue.

Should future groups choose to continue to focus on fee compliance, the team recommends further research on the solutions and technologies proposed in the "Possible Solutions" section. The team was unable to obtain a firm quote on the construction involved in their recommendation, instead estimating using park construction costs from the past and extrapolating with data from previous years. For this solution to be implemented, further investigation and more accurate data are required.

However, should future groups choose to focus on traffic congestion, the team made several observations that may prove helpful. While surveying the parking lots for fee compliance, the team observed that in midmorning and afternoon counts, parking lots for major attractions within the park such as Sand Beach and Jordan Pond House are at capacity or overfilled. This correlates with visitor dissatisfaction as noted in surveys conducted by Robert Manning (Manning 2009). Future groups could investigate parking lots, possibly counting cars using pneumatic tube sensors, to find patterns in high trafficked times. From this, they could propose solutions for management of the overcrowded parking lots and congested roads.

Solar Power and Real-time Clock for Sensors

While the deployed sensors provided an invaluable means of collecting data, they were found to be a very high-maintenance solution. In an attempt to decrease the maintenance load on the team, one sensor was outfitted with a solar panel to provide

power and recharge the on-board battery throughout the day. This was shown to increase the battery life of the sensor, but periods of extended sunlight deprivation caused the sensor to restart unpredictably. In order to combat this, it was proposed that a self-powered real-time clock module be installed on the sensors such that it could keep track of time if the battery died.

Use of Other Counting Technology

Another suggestion for future groups to pursue is the use of other counting technology. For example, this team submitted an application to Placemeter for temporary use of their cameras and software, yet were turned down. Placemeter's technology is intended to be an urban platform, and as such is not currently well-suited to a national park. However, a future team may be able to work with similar companies, whose goals are more in line with this project.

References

Apache POI - the Java API for Microsoft Documents. (2004, January). Retrieved July 10, 2016, from http://poi.apache.org/

Bar Harbor Chamber of Commerce. (n.d.). Bar Harbor Info - Preserving Our Island. Retrieved April 03, 2016, from http://www.barharborinfo.com/Preserving-Our-Island.aspx

Bernard, H. R. (2011). Research Methods in Anthropology: Qualitative and Quantitative Approaches (5). Blue Ridge Summit, US: AltaMira Press. Retrieved from http://ebrary.com

Billings, Johanna S. "Acadia National Park Seeks Input on Traffic, Parking Issues." Bangor Daily News. 26 May 2015. Web.

Bouet, M., & Dos Santos, A. L. (2008, November). RFID tags: Positioning principles and localization techniques. In 2008 1st IFIP Wireless Days (pp. 1-5). IEEE.

Crikelair, Tom. "2011 and 2012 Island Explorer Passenger Surveys." (2012). Print.

Flaxington, T. F., Mehilli, R., Pepin, A. J., & Sturman, D. A. (2015). *Mobility On Venetian Expressways: Alleviating congestion and improving navigation in Venice*. (Undergraduate Interactive Qualifying Project No. E-project-121815-101353). Retrieved from Worcester Polytechnic Institute Electronic Projects Collection: https://www.wpi.edu/Pubs/E-project/Available/E-project-121815-101353/

Hallo, J. C., & Manning, R. E. (2009). Transportation and recreation: A case study of visitors driving for pleasure at Acadia National Park. Journal of Transport Geography, 17(6), 491-499.

Jacobi, C. (2016). Vehicle Traffic and Visitor Use of the Cadillac Mountain Summit Road 2015.

Jacobi, C. (2016). Personal Interview.

Kelly, J. (2015, April 2). Acadia National Park to offer car-free mornings. Retrieved April 03, 2016, from https://www.nps.gov/acad/learn/news/acadia-national-park-to-offer-car-free-mornings.htm

Kelly, J. (2015, Summer). Acadia Transportation Plan, #1, 1-7.

Kennedy, M. (2015, July 28). Another report warns how climate change could harm Maine's coast, this time at Acadia. Retrieved April 03, 2016, from http://bangordailynews.com/2015/07/28/outdoors/another-report-warns-how-climate-change-could-harm-maines-coast-this-time-at-acadia/

Leduc, G. (2008). Road traffic data: Collection methods and applications. Working Papers on Energy, Transport and Climate Change, 1(55).

Mace, B. L., Marquit, J. D., & Bates, S. C. (2013). Visitor assessment of the mandatory alternative transportation system at Zion National Park. Environmental management, 52(5), 1271-1285.

Manning, Robert E. (2009). Parks & People: Managing Outdoor Recreation at Acadia National Park

National Park Service (2016). Personal Interview.

National Park Service. (n.d.). Annual Park Ranking Report for Recreation Visitors in: 2015 Park Type: (All). Retrieved July 15, 2016, from https://irma.nps.gov/Stats/SSRSReports/National Reports/Annual Park Ranking Report (1979 - Last Calendar Year)

National Park Service Visitor Use Statistics. (n.d.). Retrieved April 03, 2016, from https://irma.nps.gov/Stats/SSRSReports/Park Specific Reports/Park YTD Version 1?Park=ACAD

National Park Service, Land Resources Division, Listing of Acreage (Summary). (n.d.). Retrieved July 13th, 2016, from https://irma.nps.gov/Stats/reports/national

Prentice-Dunn, J. (2016, April 18). Celebrating 100 Years of National Parks: Protecting our Natural Heritage and Driving Local Economies. Retrieved April 28, 2016, from http://westernpriorities.org/2016/04/18/celebrating-100-years-of-national-parks-protecting-our-natural-heritage-and-driving-local-economies/

Schreiber, L. (2015, July 15). As visitation grows, Acadia National Park sees planning and fundraising as priorities. Retrieved April 03, 2016, from http://www.mainebiz.biz/article/20150713/CURRENTEDITION/307089991/as-visitation-grows-acadia-national-park-sees-planning-and-fundraising-as-priorities

Somerville, Richard W. (2016, July 21). Personal communication

Transportation Fact Sheet [Pamphlet]. (2014). National Park Service.

Trotter, B. (2015, September 16). Acadia National Park grapples with traffic congestion. Retrieved April 03, 2016, from http://bangordailynews.com/2015/09/16/news/hancock/acadia-national-park-grapples-with-traffic-congestion/

Trotter, B. (2015, May 11). Acadia National Park to be car-free Saturday morning. Retrieved April 03, 2016, from http://bangordailynews.com/2015/05/11/news/hancock/acadia-national-park-to-be-car-free-saturday-morning/

United States. National Park Service. (2016). Fees & Passes. Retrieved July 14, 2016, from https://www.nps.gov/acad/planyourvisit/fees.htm#CP_JUMP_4007841

Your Dollars At Work. (n.d.). Retrieved April 3, 2016, from https://www.nps.gov/acad/learn/management/yourdollarsatwork.htm

Yosemite Overcrowded - Problems & Solutions - CSERC. (2012, February 1). Retrieved April 03, 2016, from http://www.cserc.org/news/yosemite-overcrowded-problems-solutions/

Appendix A: Arduino Code

```
//Arduino Pressure Sensor Datalogger
//Revision 3
//Daniel Whittle 04/27/2016
#include <SD.h>

const int calibPin = 0;//pin for the reference voltage (analog)
const int sensorPin = 1;//pin for the sensor voltage (analog)
const int chipSelect = 10;//pin for the SD card interface (digital)
const int indicatorPin = 2; //pin for the indicator LED (digital)

const int debounce = 75  ; //debounce timer (milliseconds)

boolean pressure = true;
boolean isCar = true;

void setup()
{
 // we use serial comms for debugging
  Serial.begin(9600);
   while (!Serial) {
    ; // wait for serial port to connect. Needed for Leonardo only
  }


  Serial.print("Initializing SD card...");
  // make sure that the default chip select pin is set to
  // output, even if you don't use it:
  pinMode(indicatorPin, OUTPUT);
  //indicator LED
  // see if the card is present and can be initialized:
  if (!SD.begin(chipSelect)) {
    Serial.println("Card failed, or not present");
    // don't do anything more:
    return;
  }
  Serial.println("card initialized.");
  //check for datalog file
  Serial.println("Initializing Datalog File...");
  if (SD.exists("datalog.txt")){
    Serial.println("datalog.txt already exists");
  }else{
```

```
    Serial.println("datalog will be created");
  }
}

void loop()
{
  String timeString = String(millis());
  /*int Vref = analogRead(calibPin);
  int Vin = analogRead(sensorPin);
  Serial.println("Vref: "+ Vref);
  Serial.println("Vin: "+Vin);*/
  pressure = analogRead(sensorPin) > analogRead(calibPin);
  if(!pressure && !isCar){//if the sensor wasn't tripped last time and is this time
    //send a serial signal
    Serial.println("ping at" + timeString);
    logString(timeString);//log a timestamp to the SD card
    isCar = true;
    delay(debounce);
  }else if(pressure && isCar){
    isCar = false;
  }
  digitalWrite(indicatorPin, pressure);//if there's a car on the tube, turn the LED
on. This is for calibration and debugging.

  delay(5); //small delay to avoid excessive bouncing when a car drives over the
sensor
}

void logString(String data){
  File dataFile = SD.open("datalog.txt",FILE_WRITE);//open the data file, or
create it if it does not exist.
  if(dataFile){//if we opened the file
    dataFile.println(data);//store the data
    Serial.println("logged");//and tell serial that we recorded it
  }else{//whoops
    Serial.println("Failed to open datalog.txt");//there's a problem if you get this
message. either the SD card wiring is messed up or there is no card inserted.
  }
  dataFile.close();
}
```

Appendix B: Machine Reports

MACHINING REPORT

ESPRIT
The Right Choice

Milling report generated by jsengstaken on 4/28/2016 5:12 PM.

Part Name:	**Case Top Op1**	[redacted]
ESPRIT File Path:	R:\IQP\Top\Case Top Op1.esp	
NC Program Number: Name: Unit:	 1.0000 Inch	
Overall Cycle Time:	00:09:26	
Material Class: Condition:		
Comment:	-	

OP #	OPERATION	TOOL#	TOOL	SPEED RPM/SPM	FEED (XY/Z)	WORK COORD. ANGLES	NC COMP	CYCLE TIME	COMMENT
7	SolidMill - Facing	9.0000	1/2" EM	6000.0000 785.0000	90.0000 18.0000	XYZ (0.0000,0.0000)	- -	00:02:35	-
3	SolidMill - Contouring	9.0000	1/2" EM	6000.0000 785.0000	99.0000 18.0000	XYZ (0.0000,0.0000)	Off 0.0000	00:03:26	-
4	SolidMill - Pocketing	9.0000	1/2" EM	12000.0000 1571.0000	288.0000 36.0000	XYZ (0.0000,0.0000)	Left 0.2500	00:01:25	-
2	SolidMill - Pocketing	7.0000	EM .25 Finish	6000.0000 393.0000	36.0000 7.2000	XYZ (0.0000,0.0000)	Left 0.0000	00:01:51	-
6	SolidMill - Spot Drilling	6.0000	CM .375 DrillMill	3056.0000 300.0000	33.6160 -	XYZ (0.0000,0.0000)	- -	00:00:01	-
5	SolidMill - Drilling	4.0000	5/16 Drill	5701.0000 300.0000	57.0100 -	XYZ (0.0000,0.0000)	- -	00:00:09	-

OPERATION DETAILS

OP 7 : SolidMill - Facing	
Op Type	-
Work Coordinate	XYZ
Primary Angle Secondary Angle	0.0000 0.0000
Cycle Time Rapid length Feed Length	00:02:35 0.1250 230.6750
T 9.0000 : 1/2" EM	
Tool Style	End Mill
Orientation	X +
Tool Material	High Speed Steel, Solid, Uncoated
Spindle Direction	CW
Coolant	On
Length Comp Register	9.0000

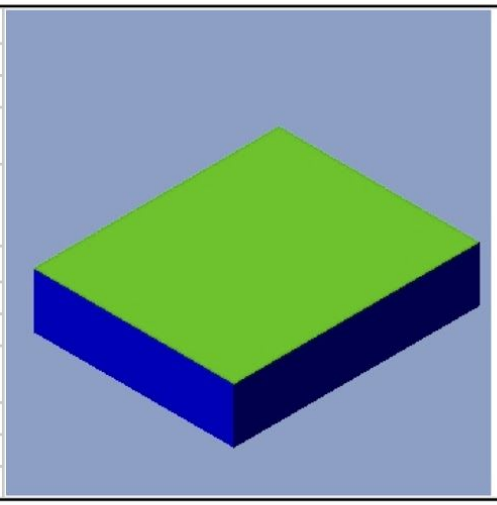

OPERATION DETAILS

OP 3 : SolidMill - Contouring	
Op Type	-
Work Coordinate	XYZ
Primary Angle Secondary Angle	0.0000 0.0000
Cycle Time Rapid length Feed Length	00:03:26 0.4200 324.2030
T 9.0000 : 1/2" EM	
Tool Style	End Mill
Orientation	X +
Tool Material	High Speed Steel, Solid, Uncoated
Spindle Direction	CW
Coolant	On
Length Comp Register	9.0000

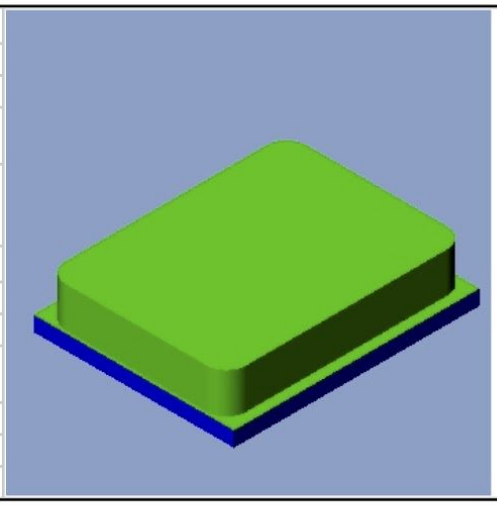

OPERATION DETAILS

OP 4 : SolidMill - Pocketing	
Op Type	-
Work Coordinate	XYZ
Primary Angle Secondary Angle	0.0000 0.0000
Cycle Time Rapid length Feed Length	00:01:25 1.6080 385.1107
T 9.0000 : 1/2" EM	
Tool Style	End Mill
Orientation	X +
Tool Material	High Speed Steel, Solid, Uncoated
Spindle Direction	CW
Coolant	On
Length Comp Register	9.0000

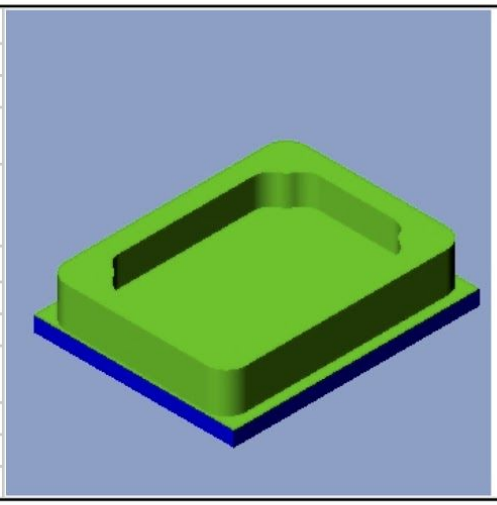

OPERATION DETAILS

OP 2 : SolidMill - Pocketing	
Op Type	-
Work Coordinate	XYZ
Primary Angle Secondary Angle	0.0000 0.0000
Cycle Time Rapid length Feed Length	00:01:51 0.1167 63.5859
T 7.0000 : EM .25 Finish	
Tool Style	End Mill
Orientation	X +
Tool Material	Carbide, Brazed, Uncoated
Spindle Direction	CW
Coolant	On
Length Comp Register	7.0000

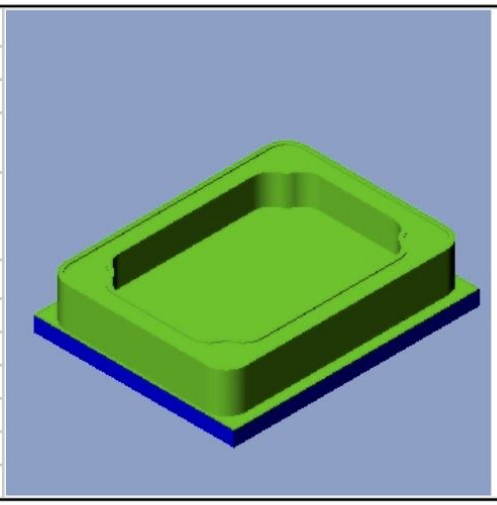

OPERATION DETAILS

OP 6 : SolidMill - Spot Drilling	
Op Type	-
Work Coordinate	XYZ
Primary Angle Secondary Angle	0.0000 0.0000
Cycle Time Rapid length Feed Length	00:00:01 14.1400 0.6400
T 6.0000 : CM .375 DrillMill	
Tool Style	Chamfered End Mill
Orientation	X +
Tool Material	High Speed Steel, Solid, Coated
Spindle Direction	CW
Coolant	On
Length Comp Register	6.0000

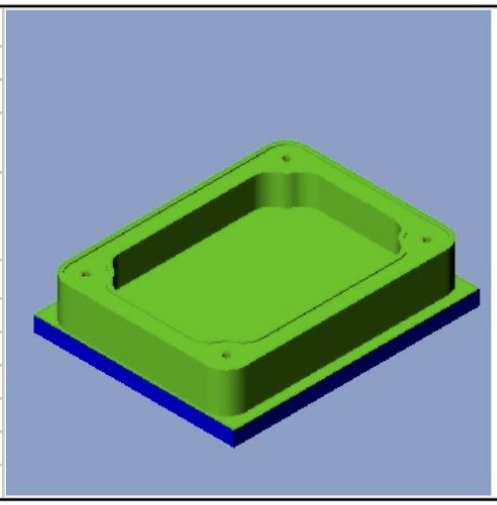

OPERATION DETAILS

OP 5 : SolidMill - Drilling	
Op Type	-
Work Coordinate	XYZ
Primary Angle Secondary Angle	0.0000 0.0000
Cycle Time Rapid length Feed Length	00:00:09 55.5685 8.3005
T 4.0000 : 5/16 Drill	
Tool Style	Drill
Orientation	Z +
Tool Material	High Speed Steel, Solid, Uncoated
Spindle Direction	CW
Coolant	On
Length Comp Register	4.0000

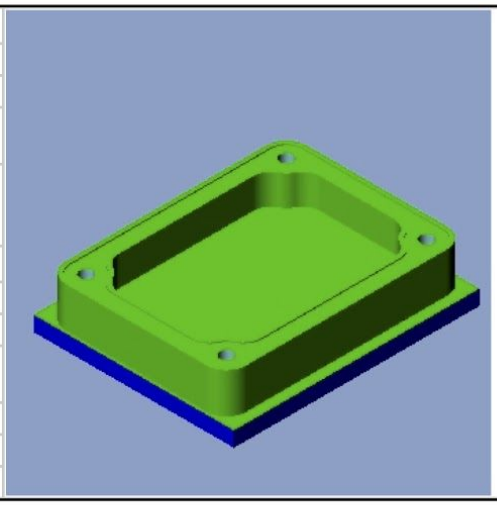

TOOL LIST

T 5.0000 : 5/16-24 tap			Comment : -	
	Tool Diameter	0.3125	Tool Material	High Speed Steel, Solid, Coated
	Holder Diameter	1.5000	Coolant	On
	Overall Length	3.0000	Spindle Direction	CW
	Tool Length	2.0000	Length Comp Register	5.0000
	Shank Diameter	0.3125	Axis Orientation	Z +
	Cutting Length	1.2000	-	-
	Number of Flutes	2.0000	-	-

T 6.0000 : CM .375 DrillMill			Comment : .375 90 deg Drill Mill Ridgid Holder MiniMill Tool 6 for ME1800	
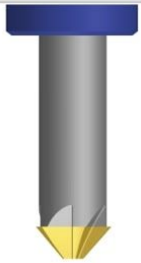	Control Diameter	0.3750	Tool Material	High Speed Steel, Solid, Coated
	Holder Diameter	2.0000	Coolant	On
	Overall Length	4.0000	Spindle Direction	CW
	Tool Length	1.5000	Length Comp Register	6.0000
	Shank Diameter	0.3750	Axis Orientation	X +
	Cutting Length	0.1719	-	-
	Number of Flutes	2.0000	-	-

T 7.0000 : EM .25 Finish			Comment : Kennemetal AADE0250J3BRB In Collet Holder MiniMill Tool 7 for ME1800	
	Tool Diameter	0.2500	Tool Material	Carbide, Brazed, Uncoated
	Holder Diameter	1.5000	Coolant	On
	Overall Length	4.0000	Spindle Direction	CW
	Tool Length	2.0000	Length Comp Register	7.0000
	Shank Diameter	0.2500	Axis Orientation	X +
	Cutting Length	1.5000	-	-
	Number of Flutes	3.0000	-	-

T 9.0000 : 1/2" EM			Comment : -	
	Tool Diameter	**0.5000**	Tool Material	**High Speed Steel, Solid, Uncoated**
	Holder Diameter	**1.5000**	Coolant	**On**
	Overall Length	**4.0000**	Spindle Direction	**CW**
	Tool Length	**3.0000**	Length Comp Register	**9.0000**
	Shank Diameter	**0.5000**	Axis Orientation	**X +**
	Cutting Length	**1.2500**	-	**-**
	Number of Flutes	**3.0000**	-	**-**

T 4.0000 : 5/16 Drill			Comment : -	
	Tool Diameter	**0.3125**	Tool Material	**High Speed Steel, Solid, Uncoated**
	Holder Diameter	**1.5000**	Coolant	**On**
	Overall Length	**4.0000**	Spindle Direction	**CW**
	Tool Length	**3.0000**	Length Comp Register	**4.0000**
	Shank Diameter	**0.3125**	Axis Orientation	**Z +**
	Cutting Length	**2.0000**	-	**-**
	Number of Flutes	**2.0000**	-	**-**

TOOL DETAILS

T 5.0000 : 5/16-24 tap			Comment : **CL7V**	
	Tool Diameter	**0.3125**	Tool Material	**High Speed Steel, Solid, Coated**
	Holder Diameter	**1.5000**	Coolant	**On**
	Overall Length	**3.0000**	Spindle Direction	**CW**
	Tool Length	**2.0000**	Length Comp Register	**5.0000**
	Shank Diameter	**0.3125**	Axis Orientation	**Z +**
	Cutting Length	**1.2000**	-	**-**
	Number of Flutes	**2.0000**	-	**-**

TOOL DETAILS

T 6.0000 : CM .375 DrillMill			Comment : **.375 90 deg Drill Mill** **Ridgid Holder** **MiniMill Tool 6 for ME1800**	
	Control Diameter	**0.3750**	Tool Material	**High Speed Steel, Solid, Coated**
	Holder Diameter	**2.0000**	Coolant	**On**
	Overall Length	**4.0000**	Spindle Direction	**CW**
	Tool Length	**1.5000**	Length Comp Register	**6.0000**
	Shank Diameter	**0.3750**	Axis Orientation	**X +**
	Cutting Length	**0.1719**	-	**-**
	Number of Flutes	**2.0000**	-	**-**

TOOL DETAILS

T 7.0000 : EM .25 Finish			Comment : **Kennemetal AADE0250J3BRB In Collet Holder MiniMill Tool 7 for ME1800**	
	Tool Diameter	**0.2500**	Tool Material	**Carbide, Brazed, Uncoated**
	Holder Diameter	**1.5000**	Coolant	**On**
	Overall Length	**4.0000**	Spindle Direction	**CW**
	Tool Length	**2.0000**	Length Comp Register	**7.0000**
	Shank Diameter	**0.2500**	Axis Orientation	**X +**
	Cutting Length	**1.5000**	-	**-**
	Number of Flutes	**3.0000**	-	**-**

TOOL DETAILS

T 9.0000 : 1/2" EM			Comment : **CL7V**	
	Tool Diameter	**0.5000**	Tool Material	**High Speed Steel, Solid, Uncoated**
	Holder Diameter	**1.5000**	Coolant	**On**
	Overall Length	**4.0000**	Spindle Direction	**CW**
	Tool Length	**3.0000**	Length Comp Register	**9.0000**
	Shank Diameter	**0.5000**	Axis Orientation	**X +**
	Cutting Length	**1.2500**	-	**-**
	Number of Flutes	**3.0000**	-	**-**

TOOL DETAILS

T 4.0000 : 5/16 Drill			Comment : **CL7V**	
	Tool Diameter	**0.3125**	Tool Material	**High Speed Steel, Solid, Uncoated**
	Holder Diameter	**1.5000**	Coolant	**On**
	Overall Length	**4.0000**	Spindle Direction	**CW**
	Tool Length	**3.0000**	Length Comp Register	**4.0000**
	Shank Diameter	**0.3125**	Axis Orientation	**Z +**
	Cutting Length	**2.0000**	-	**-**
	Number of Flutes	**2.0000**	-	**-**

MACHINING REPORT

Milling report generated by jsengstaken on 4/28/2016 5:13 PM.

Part Name:	**Case Top Op2**	[redacted]
ESPRIT File Path:	R:\IQP\Top\Case Top Op2.esp	
NC Program Number: Name: Unit:	 1.0000 Inch	
Overall Cycle Time:	00:10:15	
Material Class: Condition:		
Comment:	-	

OP #	OPERATION	TOOL#	TOOL	SPEED RPM/SPM	FEED (XY/Z)	WORK COORD. ANGLES	NC COMP	CYCLE TIME	COMMENT
16	SolidMill - Pocketing	9.0000	1/2" EM	6000.0000 785.0000	99.0000 18.0000	XYZ (0.0000,0.0000)	Left 0.0000	00:02:05	-
17	SolidMill - Custom Cycle	-	-	- -	- -	XYZ (0.0000,0.0000)	- -	00:00:00	-
4	SolidMill - Pocketing	9.0000	1/2" EM	6000.0000 785.0000	99.0000 18.0000	XYZ (0.0000,0.0000)	Left 0.0000	00:00:05	-
13	SolidMill - Pocketing	9.0000	1/2" EM	6000.0000 785.0000	99.0000 18.0000	XYZ (0.0000,0.0000)	Left 0.0000	00:00:05	-
14	SolidMill - Pocketing	9.0000	1/2" EM	6000.0000 785.0000	99.0000 18.0000	XYZ (0.0000,0.0000)	Left 0.0000	00:00:05	-
15	SolidMill - Pocketing	9.0000	1/2" EM	6000.0000 785.0000	99.0000 18.0000	XYZ (0.0000,0.0000)	Left 0.0000	00:00:05	-
9	SolidMill - Contouring	6.0000	CM .375 DrillMill	6000.0000 589.0000	36.0000 7.2000	XYZ (0.0000,0.0000)	Off 0.0000	00:00:39	-
18	SolidMill - Contouring	6.0000	CM .375 DrillMill	6000.0000 589.0000	36.0000 7.2000	XYZ (0.0000,0.0000)	Off 0.0000	00:00:08	-
19	SolidMill - Contouring	6.0000	CM .375 DrillMill	6000.0000 589.0000	36.0000 7.2000	XYZ (0.0000,0.0000)	Off 0.0000	00:00:08	-
20	SolidMill - Contouring	6.0000	CM .375 DrillMill	6000.0000 589.0000	36.0000 7.2000	XYZ (0.0000,0.0000)	Off 0.0000	00:00:08	-
21	SolidMill - Contouring	6.0000	CM .375 DrillMill	6000.0000 589.0000	36.0000 7.2000	XYZ (0.0000,0.0000)	Off 0.0000	00:00:08	-
23	SolidMill - Engraving	3.0000	1/8 BEM	6000.0000 196.0000	18.0000 3.6000	XYZ (0.0000,0.0000)	- -	00:06:39	-

OPERATION DETAILS

OP 16 : SolidMill - Pocketing	
Op Type	-
Work Coordinate	XYZ
Primary Angle Secondary Angle	0.0000 0.0000
Cycle Time Rapid length Feed Length	00:02:05 0.5000 203.8983
T 9.0000 : 1/2" EM	
Tool Style	End Mill
Orientation	X +
Tool Material	High Speed Steel, Solid, Uncoated
Spindle Direction	CW
Coolant	On
Length Comp Register	9.0000

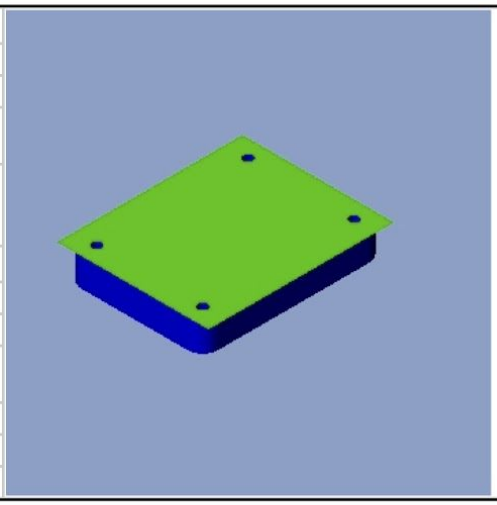

OPERATION DETAILS

OP 17 : SolidMill - Custom Cycle	
Op Type	-
Work Coordinate	XYZ
Primary Angle Secondary Angle	0.0000 0.0000
Cycle Time Rapid length Feed Length	00:00:00 0.0000 0.0000
T CLT1101V : CL498V	
Tool Style	CLT1110V
Orientation	CLT1842V
Tool Material	CLT1420V
Spindle Direction	CLT1195V
Coolant	CLT1214V
Length Comp Register	CLT1121V

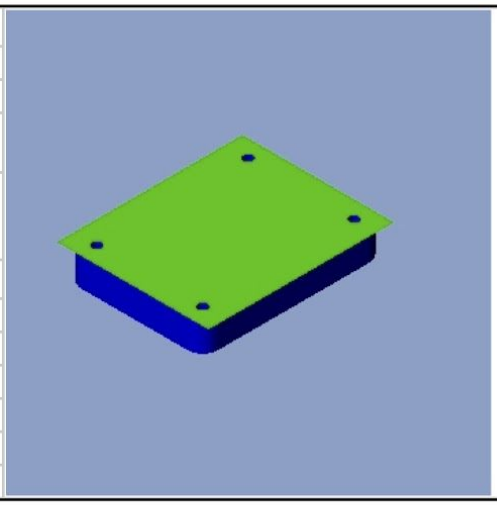

OPERATION DETAILS

OP 4 : SolidMill - Pocketing	
Op Type	-
Work Coordinate	XYZ
Primary Angle Secondary Angle	0.0000 0.0000
Cycle Time Rapid length Feed Length	00:00:05 0.5700 7.0998
T 9.0000 : 1/2" EM	
Tool Style	End Mill
Orientation	X +
Tool Material	High Speed Steel, Solid, Uncoated
Spindle Direction	CW
Coolant	On
Length Comp Register	9.0000

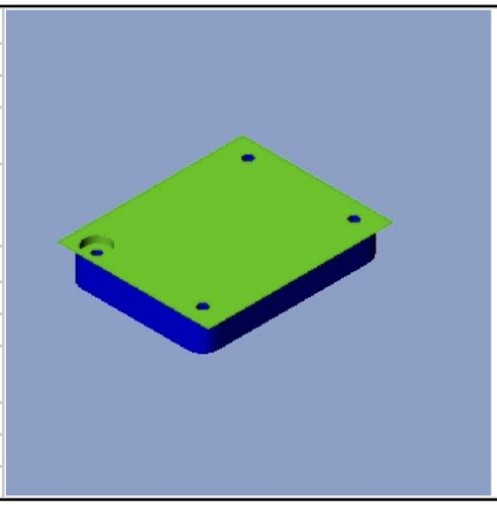

OPERATION DETAILS

OP 13 : SolidMill - Pocketing	
Op Type	-
Work Coordinate	XYZ
Primary Angle Secondary Angle	0.0000 0.0000
Cycle Time Rapid length Feed Length	00:00:05 0.5700 7.0998
T 9.0000 : 1/2" EM	
Tool Style	End Mill
Orientation	X +
Tool Material	High Speed Steel, Solid, Uncoated
Spindle Direction	CW
Coolant	On
Length Comp Register	9.0000

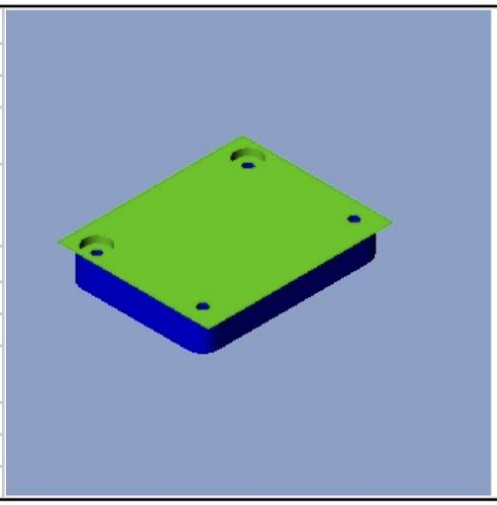

OPERATION DETAILS

OP 14 : SolidMill - Pocketing	
Op Type	-
Work Coordinate	XYZ
Primary Angle Secondary Angle	0.0000 0.0000
Cycle Time Rapid length Feed Length	00:00:05 0.5700 7.0998
T 9.0000 : 1/2" EM	
Tool Style	End Mill
Orientation	X +
Tool Material	High Speed Steel, Solid, Uncoated
Spindle Direction	CW
Coolant	On
Length Comp Register	9.0000

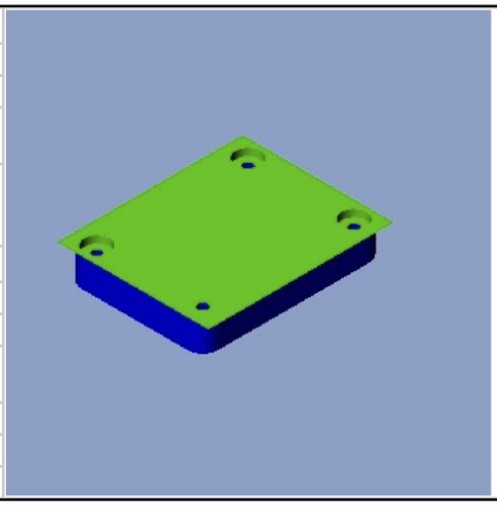

OPERATION DETAILS

OP 15 : SolidMill - Pocketing	
Op Type	-
Work Coordinate	XYZ
Primary Angle Secondary Angle	0.0000 0.0000
Cycle Time Rapid length Feed Length	00:00:05 0.5700 7.0998
T 9.0000 : 1/2" EM	
Tool Style	End Mill
Orientation	X +
Tool Material	High Speed Steel, Solid, Uncoated
Spindle Direction	CW
Coolant	On
Length Comp Register	9.0000

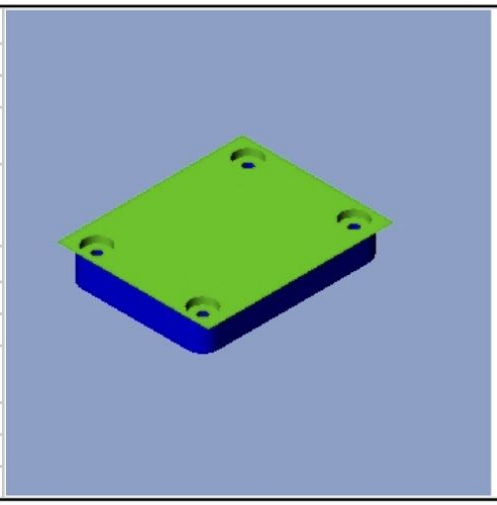

OPERATION DETAILS

OP 9 : SolidMill - Contouring	
Op Type	-
Work Coordinate	XYZ
Primary Angle Secondary Angle	0.0000 0.0000
Cycle Time Rapid length Feed Length	00:00:39 0.0000 21.4501
T 6.0000 : CM .375 DrillMill	
Tool Style	Chamfered End Mill
Orientation	X +
Tool Material	High Speed Steel, Solid, Coated
Spindle Direction	CW
Coolant	On
Length Comp Register	6.0000

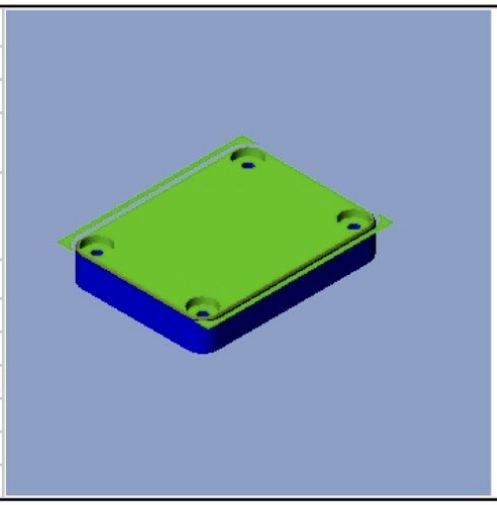

OPERATION DETAILS

OP 18 : SolidMill - Contouring	
Op Type	-
Work Coordinate	XYZ
Primary Angle Secondary Angle	0.0000 0.0000
Cycle Time Rapid length Feed Length	00:00:08 0.0000 3.3584
T 6.0000 : CM .375 DrillMill	
Tool Style	Chamfered End Mill
Orientation	X +
Tool Material	High Speed Steel, Solid, Coated
Spindle Direction	CW
Coolant	On
Length Comp Register	6.0000

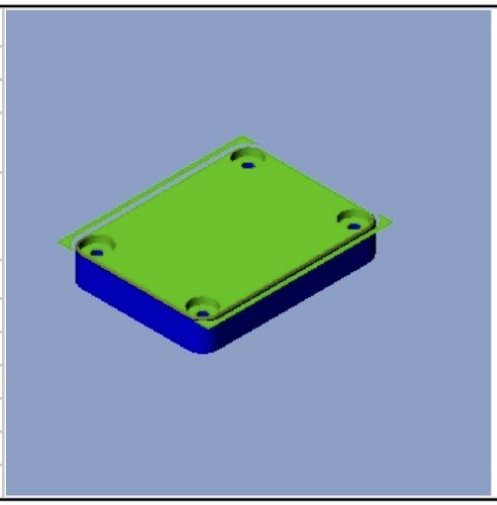

OPERATION DETAILS

OP 19 : SolidMill - Contouring	
Op Type	-
Work Coordinate	XYZ
Primary Angle Secondary Angle	0.0000 0.0000
Cycle Time Rapid length Feed Length	00:00:08 0.0000 3.3584
T 6.0000 : CM .375 DrillMill	
Tool Style	Chamfered End Mill
Orientation	X +
Tool Material	High Speed Steel, Solid, Coated
Spindle Direction	CW
Coolant	On
Length Comp Register	6.0000

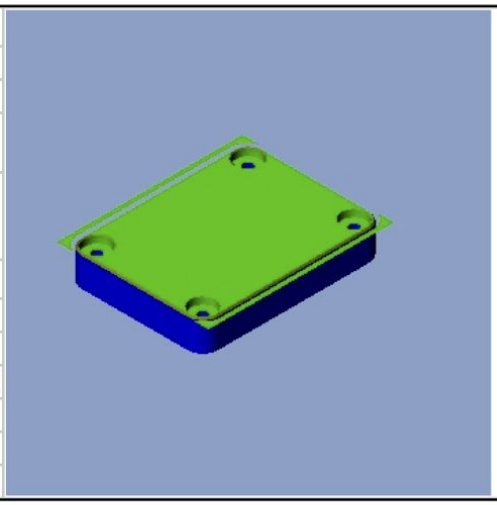

OPERATION DETAILS

OP 20 : SolidMill - Contouring	
Op Type	-
Work Coordinate	XYZ
Primary Angle Secondary Angle	0.0000 0.0000
Cycle Time Rapid length Feed Length	00:00:08 0.0000 3.3584
T 6.0000 : CM .375 DrillMill	
Tool Style	Chamfered End Mill
Orientation	X +
Tool Material	High Speed Steel, Solid, Coated
Spindle Direction	CW
Coolant	On
Length Comp Register	6.0000

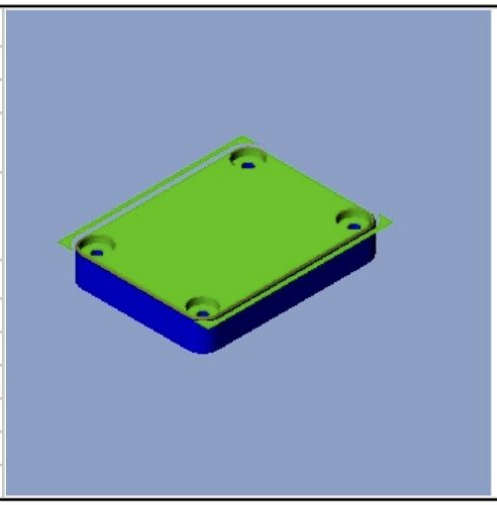

OPERATION DETAILS

OP 21 : SolidMill - Contouring	
Op Type	-
Work Coordinate	XYZ
Primary Angle Secondary Angle	0.0000 0.0000
Cycle Time Rapid length Feed Length	00:00:08 0.0000 3.3584
T 6.0000 : CM .375 DrillMill	
Tool Style	Chamfered End Mill
Orientation	X +
Tool Material	High Speed Steel, Solid, Coated
Spindle Direction	CW
Coolant	On
Length Comp Register	6.0000

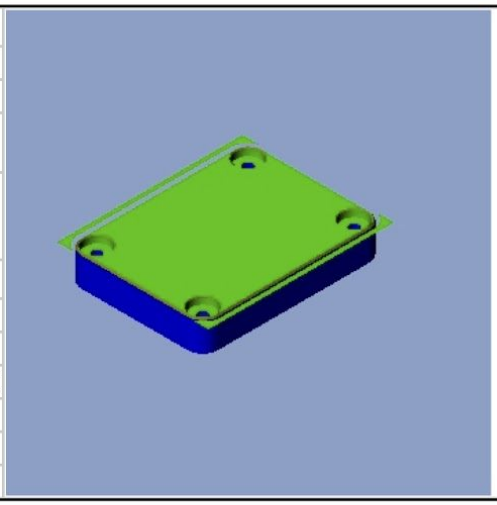

OPERATION DETAILS

OP 23 : SolidMill - Engraving	
Op Type	-
Work Coordinate	XYZ
Primary Angle Secondary Angle	0.0000 0.0000
Cycle Time Rapid length Feed Length	00:06:39 17.6370 61.0615
T 3.0000 : 1/8 BEM	
Tool Style	Ball End Mill
Orientation	X +
Tool Material	High Speed Steel, Solid, Coated
Spindle Direction	CW
Coolant	On
Length Comp Register	3.0000

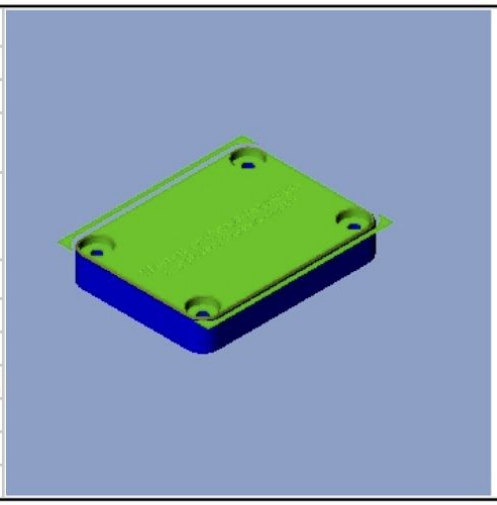

TOOL LIST

T 9.0000 : 1/2" EM			Comment : -	
	Tool Diameter	**0.5000**	Tool Material	**High Speed Steel, Solid, Uncoated**
	Holder Diameter	**1.5000**	Coolant	**On**
	Overall Length	**4.0000**	Spindle Direction	**CW**
	Tool Length	**3.0000**	Length Comp Register	**9.0000**
	Shank Diameter	**0.5000**	Axis Orientation	**X +**
	Cutting Length	**1.2500**	-	**-**
	Number of Flutes	**3.0000**	-	**-**

T 3.0000 : 1/8 BEM			Comment : -	
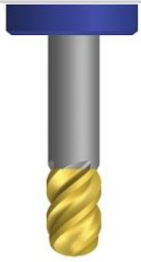	Tool Diameter	**0.1250**	Tool Material	**High Speed Steel, Solid, Coated**
	Holder Diameter	**1.5000**	Coolant	**On**
	Overall Length	**4.0000**	Spindle Direction	**CW**
	Tool Length	**1.0000**	Length Comp Register	**3.0000**
	Shank Diameter	**0.1250**	Axis Orientation	**X +**
	Cutting Length	**0.3750**	-	**-**
	Number of Flutes	**3.0000**	-	**-**

T 6.0000 : CM .375 DrillMill			Comment : **.375 90 deg Drill Mill Ridgid Holder MiniMill Tool 6 for ME1800**	
	Control Diameter	**0.3750**	Tool Material	**High Speed Steel, Solid, Coated**
	Holder Diameter	**2.0000**	Coolant	**On**
	Overall Length	**4.0000**	Spindle Direction	**CW**
	Tool Length	**1.5000**	Length Comp Register	**6.0000**
	Shank Diameter	**0.3750**	Axis Orientation	**X +**
	Cutting Length	**0.1719**	-	**-**
	Number of Flutes	**2.0000**	-	**-**

TOOL DETAILS

T 9.0000 : 1/2" EM			Comment : **CL7V**	
	Tool Diameter	**0.5000**	Tool Material	**High Speed Steel, Solid, Uncoated**
	Holder Diameter	**1.5000**	Coolant	**On**
	Overall Length	**4.0000**	Spindle Direction	**CW**
	Tool Length	**3.0000**	Length Comp Register	**9.0000**
	Shank Diameter	**0.5000**	Axis Orientation	**X +**
	Cutting Length	**1.2500**	-	**-**
	Number of Flutes	**3.0000**	-	**-**

TOOL DETAILS

T 3.0000 : 1/8 BEM			Comment : **CL7V**	
	Tool Diameter	**0.1250**	Tool Material	**High Speed Steel, Solid, Coated**
	Holder Diameter	**1.5000**	Coolant	**On**
	Overall Length	**4.0000**	Spindle Direction	**CW**
	Tool Length	**1.0000**	Length Comp Register	**3.0000**
	Shank Diameter	**0.1250**	Axis Orientation	**X +**
	Cutting Length	**0.3750**	-	**-**
	Number of Flutes	**3.0000**	-	**-**

TOOL DETAILS

T 6.0000 : CM .375 DrillMill			Comment : **.375 90 deg Drill Mill** **Ridgid Holder** **MiniMill Tool 6 for ME1800**	
	Control Diameter	**0.3750**	Tool Material	**High Speed Steel, Solid, Coated**
	Holder Diameter	**2.0000**	Coolant	**On**
	Overall Length	**4.0000**	Spindle Direction	**CW**
	Tool Length	**1.5000**	Length Comp Register	**6.0000**
	Shank Diameter	**0.3750**	Axis Orientation	**X +**
	Cutting Length	**0.1719**	-	**-**
	Number of Flutes	**2.0000**	-	**-**

MACHINING REPORT

Milling report generated by jsengstaken on 4/30/2016 5:56 PM.

Part Name:	**Case Bottom Op1**	[redacted]
ESPRIT File Path:	R:\IQP\Bottom\Case Bottom Op1.esp	
NC Program Number: Name: Unit:	 1.0000 Inch	
Overall Cycle Time:	00:09:33	
Material Class: Condition:		
Comment:	-	

OP #	OPERATION	TOOL#	TOOL	SPEED RPM/SPM	FEED (XY/Z)	WORK COORD. ANGLES	NC COMP	CYCLE TIME	COMMENT
7	SolidMill - Facing	9.0000	1/2" EM	6000.0000 785.0000	90.0000 18.0000	XYZ (0.0000,0.0000)	- -	00:02:35	-
3	SolidMill - Contouring	9.0000	1/2" EM	6000.0000 785.0000	99.0000 18.0000	XYZ (0.0000,0.0000)	Off 0.0000	00:03:26	-
4	SolidMill - Pocketing	9.0000	1/2" EM	12000.0000 1571.0000	288.0000 36.0000	XYZ (0.0000,0.0000)	Left 0.2500	00:01:25	-
2	SolidMill - Pocketing	7.0000	EM .25 Finish	6000.0000 393.0000	36.0000 7.2000	XYZ (0.0000,0.0000)	Left 0.0000	00:01:51	-
6	SolidMill - Spot Drilling	6.0000	CM .375 DrillMill	3056.0000 300.0000	33.6160 -	XYZ (0.0000,0.0000)	- -	00:00:01	-
5	SolidMill - Drilling	4.0000	I Drill	5701.0000 300.0000	57.0100 -	XYZ (0.0000,0.0000)	- -	00:00:06	-
8	Tap	5.0000	5/16-24 tap	950.0000 78.0000	39.5833 -	XYZ (0.0000,0.0000)	- -	00:00:10	-

OPERATION DETAILS

OP 7 : SolidMill - Facing	
Op Type	-
Work Coordinate	XYZ
Primary Angle Secondary Angle	0.0000 0.0000
Cycle Time Rapid length Feed Length	00:02:35 0.1250 230.6750
T 9.0000 : 1/2" EM	
Tool Style	End Mill
Orientation	X +
Tool Material	High Speed Steel, Solid, Uncoated
Spindle Direction	CW
Coolant	On
Length Comp Register	9.0000

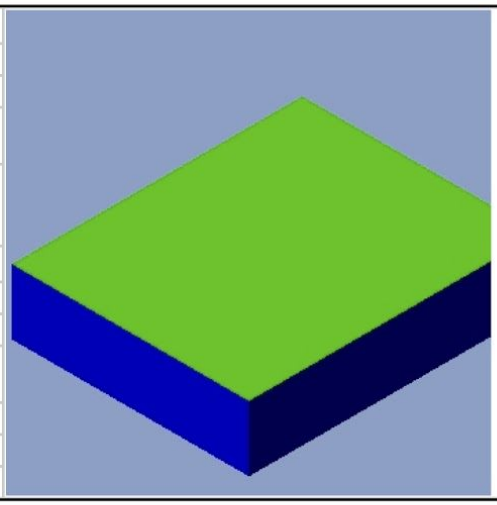

OPERATION DETAILS

OP 3 : SolidMill - Contouring	
Op Type	-
Work Coordinate	XYZ
Primary Angle Secondary Angle	0.0000 0.0000
Cycle Time Rapid length Feed Length	00:03:26 0.4200 324.2030
T 9.0000 : 1/2" EM	
Tool Style	End Mill
Orientation	X +
Tool Material	High Speed Steel, Solid, Uncoated
Spindle Direction	CW
Coolant	On
Length Comp Register	9.0000

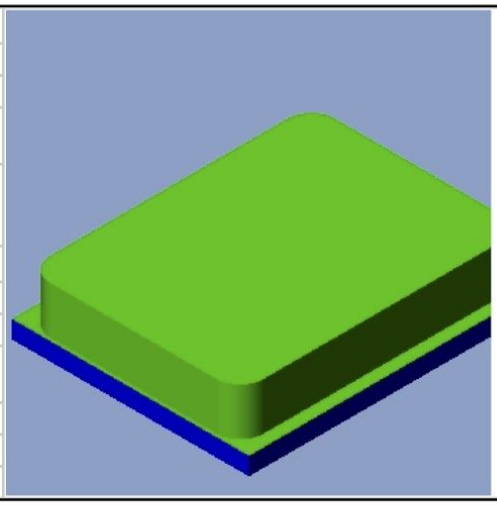

OPERATION DETAILS

OP 4 : SolidMill - Pocketing	
Op Type	-
Work Coordinate	XYZ
Primary Angle Secondary Angle	0.0000 0.0000
Cycle Time Rapid length Feed Length	00:01:25 1.6080 385.1107
T 9.0000 : 1/2" EM	
Tool Style	End Mill
Orientation	X +
Tool Material	High Speed Steel, Solid, Uncoated
Spindle Direction	CW
Coolant	On
Length Comp Register	9.0000

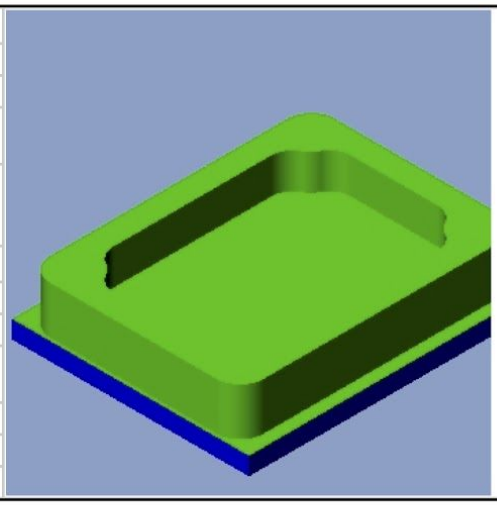

OPERATION DETAILS

OP 2 : SolidMill - Pocketing	
Op Type	-
Work Coordinate	XYZ
Primary Angle Secondary Angle	0.0000 0.0000
Cycle Time Rapid length Feed Length	00:01:51 0.1167 63.5859
T 7.0000 : EM .25 Finish	
Tool Style	End Mill
Orientation	X +
Tool Material	Carbide, Brazed, Uncoated
Spindle Direction	CW
Coolant	On
Length Comp Register	7.0000

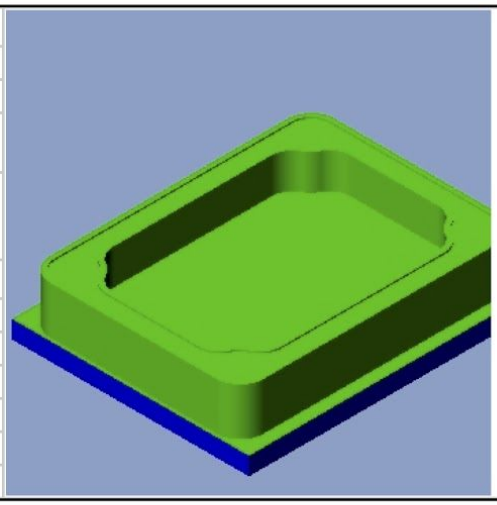

OPERATION DETAILS

OP 6 : SolidMill - Spot Drilling	
Op Type	-
Work Coordinate	XYZ
Primary Angle Secondary Angle	0.0000 0.0000
Cycle Time Rapid length Feed Length	00:00:01 14.1400 0.6400
T 6.0000 : CM .375 DrillMill	
Tool Style	Chamfered End Mill
Orientation	X +
Tool Material	High Speed Steel, Solid, Coated
Spindle Direction	CW
Coolant	On
Length Comp Register	6.0000

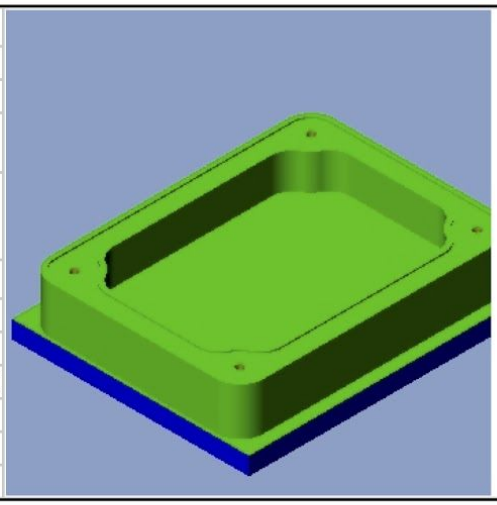

OPERATION DETAILS

OP 5 : SolidMill - Drilling	
Op Type	-
Work Coordinate	XYZ
Primary Angle Secondary Angle	0.0000 0.0000
Cycle Time Rapid length Feed Length	00:00:06 34.9069 5.3269
T 4.0000 : I Drill	
Tool Style	Drill
Orientation	Z +
Tool Material	High Speed Steel, Solid, Uncoated
Spindle Direction	CW
Coolant	On
Length Comp Register	4.0000

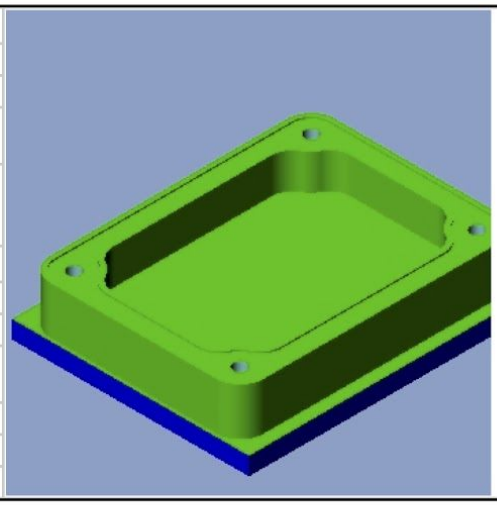

OPERATION DETAILS

OP 8 : Tap	
Op Type	-
Work Coordinate	XYZ
Primary Angle Secondary Angle	0.0000 0.0000
Cycle Time Rapid length Feed Length	00:00:10 13.5000 6.4000
T 5.0000 : 5/16-24 tap	
Tool Style	Tap
Orientation	Z +
Tool Material	High Speed Steel, Solid, Coated
Spindle Direction	CW
Coolant	On
Length Comp Register	5.0000

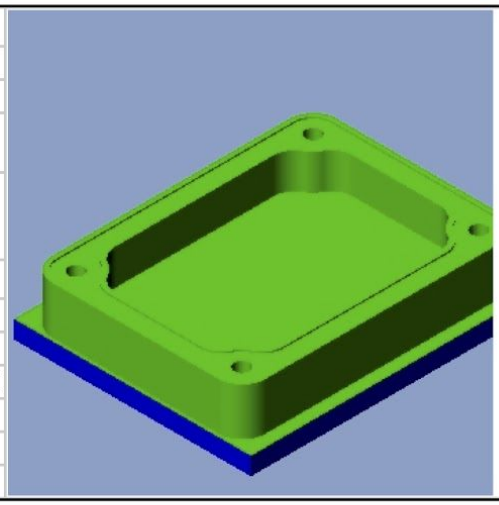

MACHINING REPORT

Milling report generated by jsengstaken on 4/28/2016 5:12 PM.

Part Name:	**Case Bottom Op2**	[redacted]
ESPRIT File Path:	R:\IQP\Bottom\Case Bottom Op2.esp	
NC Program Number: Name: Unit:	 1.0000 Inch	
Overall Cycle Time:	00:02:44	
Material Class: Condition:		
Comment:	-	

OP #	OPERATION	TOOL#	TOOL	SPEED RPM/SPM	FEED (XY/Z)	WORK COORD. ANGLES	NC COMP	CYCLE TIME	COMMENT
16	SolidMill - Pocketing	9.0000	1/2" EM	6000.0000 785.0000	99.0000 18.0000	XYZ (0.0000,0.0000)	Left 0.0000	00:02:05	-
17	SolidMill - Custom Cycle	-	-	- -	- -	XYZ (0.0000,0.0000)	- -	00:00:00	-
9	SolidMill - Contouring	6.0000	CM .375 DrillMill	6000.0000 589.0000	36.0000 7.2000	XYZ (0.0000,0.0000)	Off 0.0000	00:00:39	-

OPERATION DETAILS

OP 16 : SolidMill - Pocketing	
Op Type	-
Work Coordinate	XYZ
Primary Angle Secondary Angle	0.0000 0.0000
Cycle Time Rapid length Feed Length	00:02:05 0.5000 203.8983
T 9.0000 : 1/2" EM	
Tool Style	End Mill
Orientation	X +
Tool Material	High Speed Steel, Solid, Uncoated
Spindle Direction	CW
Coolant	On
Length Comp Register	9.0000

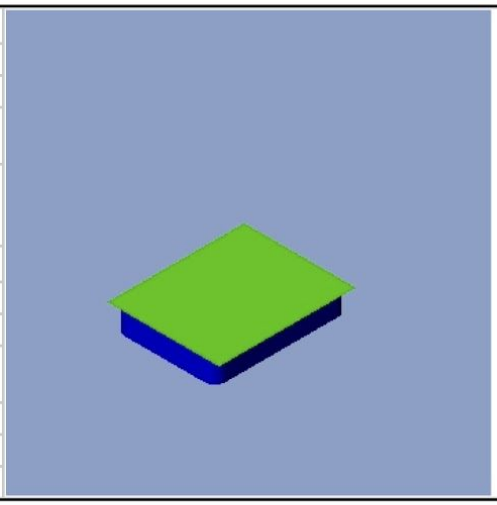

OPERATION DETAILS

OP 17 : SolidMill - Custom Cycle	
Op Type	-
Work Coordinate	XYZ
Primary Angle Secondary Angle	0.0000 0.0000
Cycle Time Rapid length Feed Length	00:00:00 0.0000 0.0000
T CLT1101V : CL498V	
Tool Style	CLT1110V
Orientation	CLT1842V
Tool Material	CLT1420V
Spindle Direction	CLT1195V
Coolant	CLT1214V
Length Comp Register	CLT1121V

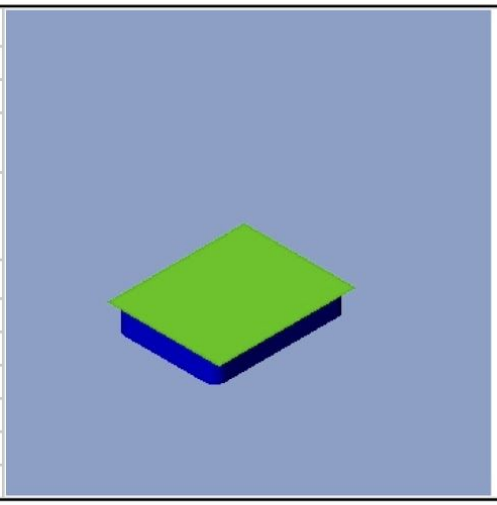

OPERATION DETAILS

OP 9 : SolidMill - Contouring	
Op Type	-
Work Coordinate	XYZ
Primary Angle Secondary Angle	0.0000 0.0000
Cycle Time Rapid length Feed Length	00:00:39 0.0000 21.4501
T 6.0000 : CM .375 DrillMill	
Tool Style	Chamfered End Mill
Orientation	X +
Tool Material	High Speed Steel, Solid, Coated
Spindle Direction	CW
Coolant	On
Length Comp Register	6.0000

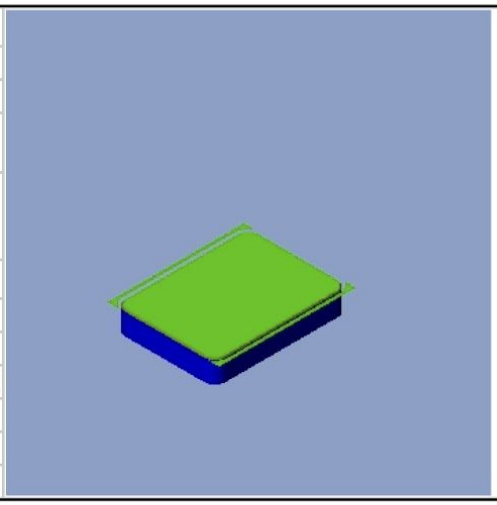

TOOL LIST

T 9.0000 : 1/2" EM			Comment : -	
	Tool Diameter	**0.5000**	Tool Material	**High Speed Steel, Solid, Uncoated**
	Holder Diameter	**1.5000**	Coolant	**On**
	Overall Length	**4.0000**	Spindle Direction	**CW**
	Tool Length	**3.0000**	Length Comp Register	**9.0000**
	Shank Diameter	**0.5000**	Axis Orientation	**X +**
	Cutting Length	**1.2500**	-	**-**
	Number of Flutes	**3.0000**	-	**-**

T 6.0000 : CM .375 DrillMill			Comment : **.375 90 deg Drill Mill** **Ridgid Holder** **MiniMill Tool 6 for ME1800**	
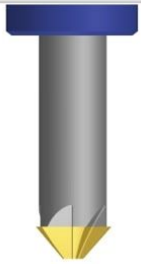	Control Diameter	**0.3750**	Tool Material	**High Speed Steel, Solid, Coated**
	Holder Diameter	**2.0000**	Coolant	**On**
	Overall Length	**4.0000**	Spindle Direction	**CW**
	Tool Length	**1.5000**	Length Comp Register	**6.0000**
	Shank Diameter	**0.3750**	Axis Orientation	**X +**
	Cutting Length	**0.1719**	-	**-**
	Number of Flutes	**2.0000**	-	**-**

TOOL DETAILS

T 9.0000 : 1/2" EM			Comment : **CL7V**	
	Tool Diameter	**0.5000**	Tool Material	**High Speed Steel, Solid, Uncoated**
	Holder Diameter	**1.5000**	Coolant	**On**
	Overall Length	**4.0000**	Spindle Direction	**CW**
	Tool Length	**3.0000**	Length Comp Register	**9.0000**
	Shank Diameter	**0.5000**	Axis Orientation	**X +**
	Cutting Length	**1.2500**	-	**-**
	Number of Flutes	**3.0000**	-	**-**

TOOL DETAILS

T 6.0000 : CM .375 DrillMill			Comment : **.375 90 deg Drill Mill** **Ridgid Holder** **MiniMill Tool 6 for ME1800**	
	Control Diameter	**0.3750**	Tool Material	**High Speed Steel, Solid, Coated**
	Holder Diameter	**2.0000**	Coolant	**On**
	Overall Length	**4.0000**	Spindle Direction	**CW**
	Tool Length	**1.5000**	Length Comp Register	**6.0000**
	Shank Diameter	**0.3750**	Axis Orientation	**X +**
	Cutting Length	**0.1719**	-	**-**
	Number of Flutes	**2.0000**	-	**-**

Appendix C: Sensor Calibration Instructions

Calibration of the pressure sensors is necessary for accurate detection in any scenario. In order to calibrate the sensors, follow these steps.

You will need:

- A car (unless on a busy road)
- An allen wrench or electric screwdriver (bolts are 5/16-24 hex head bolts)
- A small phillips head screwdriver

Instructions:

1. Open the sensor by unscrewing the bolts and removing the top of the casing (this may take some force).
2. Ensure power is connected to the sensor (the power light on the arduino should be on. Depending on the manufacturer, it may be red or green. This simply means it is on)
3. Using the screwdriver, turn the calibration potentiometer until the signal LED is on.
4. Turn the potentiometer back slowly until the signal LED just barely stops flickering.
5. Drive over the sensor tube at at least 10 mph. The light should flash once every time an axle crosses it. If it does not, you have turned the calibration back too far, return to step 3 and try again.
6. Disconnect power, insert the sd card, and reconnect power. This is necessary in order to initialize the connection to the SD card.

7. Reseal the sensor. The calibration is complete.

Appendix D: Solar Panel Circuit

The solar panel circuit is a very simple circuit, simply a diode connected to the solar panel to prevent current backflow, as shown below:

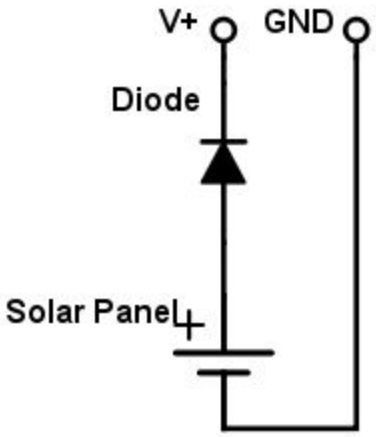

Appendix E: Software Source Code

A download of the source code can be found at:

https://drive.google.com/open?id=0Bx1nSO50xDlzX1g3UzJLOEJMZUU

Mirror:

http://www.mediafire.com/download/yfcdx7v2bw5e8f3/Data_Handler_Source_Code.zip

The compiled code can be found here:

https://drive.google.com/open?id=0Bx1nSO50xDlzS0lOa1U2SVVIRlk

Mirror:

http://www.mediafire.com/download/1cb0os9hii3bnxm/Data_Processor_V1_5_1.jar

Appendix F: Sensor Output

Below is a link to shared Google Drive folder containing the sensor output. The dashes denote when the sensor was off or malfunctioning and were input by hand. The calculations for Total and Average Cars were also done by hand after exporting the data.

https://drive.google.com/folderview?id=0B2qM2MqhUL_uTnhvbUMweHl4Tjg&usp=sharing

Appendix G: Parking Lot Counts

Table 8: Data from Schooner Head Parking lot counts. There were 50 parking spaces in this lot.

Date	Time	# of Cars in Lot	# of Empty Spaces	Percent Full (%)	Number Compliant	Number Noncompliant	Percent Compliance (%)	Percent Noncompliance (%)
07/07	10:05	6	44	12	5	1	83.3	16.7
07/07	12:30	10	40	20	10	0	100.0	0.0
07/11	10:00	12	38	24	10	2	83.3	16.7
07/11	12:30	17	33	34	16	1	94.1	5.9
07/11	19:00	1	49	2	1	0	100.0	0.0
07/12	10:00	1	49	2	1	0	100.0	0.0
07/12	12:00	12	38	24	9	3	75.0	25.0
07/12	19:00	2	48	4	1	1	50.0	50.0

Table 9: Data from Sand Beach lot counts. There were 100 parking spaces in this lot.

Date	Time	# of Cars in Lot	# of Empty Spaces	Percent Full (%)	Number Compliant	Number Noncompliant	Percent Compliance (%)	Percent Noncompliance (%)
07/07	10:00	88	12	88	82	6	93.2	6.8
07/11	10:26	95	5	95	90	5	94.7	5.3
07/11	13:22	95	5	95	92	3	96.8	3.2
07/11	19:12	15	85	15	14	1	93.3	6.7
07/12	10:17	100	0	100	94	6	94.0	6.0
07/12	12:47	99	1	99	96	3	97.0	3.0
07/12	19:18	26	74	26	23	3	88.5	11.5

Table 10: Sand Beach road overflow count. Up to 20 cars parked on the road near Sand Beach were counted to document the overflow.

Date	Time	Number Complaint	Number Noncompliant	Percent Compliance (%)	Percent Noncompliance (%)
07/11	10:26	20	0	100.0	0.0
07/11	13:22	20	0	100.0	0.0
07/11	19:12	0	0	100.0	0.0
07/12	10:17	20	0	100.0	0.0
07/12	12:47	20	0	100.0	0.0
07/12	19:18	5	0	100.0	0.0

Table 11: Data from Sand Beach Upper lot count. There were 22 parking spaces in this lot.

Date	Time	# of Cars in Lot	# of Empty Spaces	Percent Full (%)	Number Compliant	Number Noncompliant	Percent Compliance (%)	Percent Noncompliance (%)
07/07	10:15	21	1	95.5	19	2	90.5	9.5
07/07	12:50	20	2	90.9	19	1	95.0	5.0
07/11	10:26	14	8	63.6	14	0	100.0	0.0
07/11	19:12	2	20	9.1	2	0	100.0	0.0
07/12	10:17	23	-1	104.5	23	0	100.0	0.0
07/12	12:50	24	-2	109.1	22	2	91.7	8.3
07/12	19:18	1	21	4.5	0	1	0.0	100.0

Table 12: Data from Ocean Path 1 lot. There were 37 parking spaces in this lot.

Date	Time	# of Cars in Lot	# of Empty Spaces	Percent Full (%)	Number Compliant	Number Noncompliant	Percent Compliance (%)	Percent Noncompliance (%)
07/11	10:26	20	17	54.1	19	1	95.0	5.0
07/11	13:24	27	10	73.0	26	1	96.3	3.7
07/11	19:12	0	37	0	0	0	n/a	n/a
07/12	10:17	19	18	51.4	19	0	100.0	0.0
07/12	12:47	33	4	89.2	32	1	97.0	3.0
07/12	19:18	1	36	2.7	1	0	100.0	0.0

Table 13: Data from Ocean Path 2 lot. There were 14 parking spaces in this lot.

Date	Time	# of Cars in Lot	# of Empty Spaces	Percent Full (%)	Number Compliant	Number Noncompliant	Percent Compliance (%)	Percent Noncompliance (%)
07/11	10:26	4	10	28.6	3	1	75.0	25.0
07/11	13:24	9	5	64.3	9	0	100.0	0.0
07/11	19:12	0	14	0.0	0	0	n/a	n/a
07/12	10:17	3	11	21.4	2	1	66.7	33.3
07/12	12:47	11	3	78.6	11	0	100.0	0
07/12	19:18	0	14	0.0	0	0	n/a	n/a

Table 14: Data from Thunder Hole lot. There were 60 parking spaces in this lot.

Date	Time	# of Cars in Lot	# of Empty Spaces	Percent Full (%)	Number Compliant	Number Noncompliant	Percent Compliance (%)	Percent Noncompliance (%)
07/07	10:30	32	28	53.3	31	1	96.9	3.1
07/07	12:30	30	30	50.0	29	1	96.7	3.3
07/11	10:00	22	38	36.7	21	1	95.5	4.5
07/11	12:30	36	24	60.0	35	1	97.2	2.8
07/11	19:00	10	50	16.7	9	1	90.0	10.0
07/12	10:53	27	33	45.0	26	1	96.3	3.7
07/12	12:00	41	19	68.3	40	1	97.6	2.4
07/12	19:00	12	48	20.0	11	1	91.7	8.3

Table 15: Thunder Hole road overflow. There were no predefined parking spaces at this location.

Date	Time	# Compliant	# Noncompliant	Percent Compliance (%)	Percent Noncompliance (%)
07/07	10:30	4	1	80.0	20.0
07/07	12:30	43	0	100.0	0.0
07/11	10:26	5	0	100.0	0.0
07/11	13:24	26	1	96.3	3.7
07/11	19:12	2	0	100.0	0.0
07/12	10:53	1	0	100.0	0.0
07/12	12:47	9	0	100.0	0.0
07/12	19:00	5	0	100.0	0.0

Table 16: Data from Gorham Mountain Trail lot. There were 25 parking spaces in this lot.

Date	Time	# of Cars in Lot	# of Empty Spaces	Percent Full (%)	Number Compliant	Number Noncompliant	Percent Compliance (%)	Percent Noncompliance (%)
07/07	10:30	23	2	92.0	23	0	100.0	0.0
07/11	10:26	25	0	100.0	25	0	100.0	0.0
07/11	13:24	20	5	80.0	20	0	100.0	0.0
07/11	19:12	2	23	8.0	2	0	100.0	0.0
07/12	10:53	26	-1	104.0	26	0	100.0	0.0
07/12	12:47	26	-1	104.0	26	0	100.0	0.0
07/12	19:18	1	24	4.0	1	0	100.0	0.0

Table 17: Data from Ocean Path 3 lot. There were 20 parking spaces in this lot.

Date	Time	# of Cars in Lot	# of Empty Spaces	Percent Full (%)	Number Compliant	Number Noncompliant	Percent Compliance (%)	Percent Noncompliance (%)
07/11	10:00	14	6	70.0	13	1	92.9	7.1
07/11	13:24	13	7	65.0	10	3	76.9	23.1
07/11	19:00	1	19	5.0	1	0	100.0	0.0
07/12	10:17	11	9	55.0	11	0	100.0	0.0
07/12	12:47	18	2	90.0	17	1	94.4	5.6
07/12	19:00	0	20	0.0	0	0	n/a	n/a

Table 18: Data from Otter Point lot. There were 35 parking spaces in this lot.

Date	Time	# of Cars in Lot	# of Empty Spaces	Percent Full (%)	Number Compliant	Number Noncompliant	Percent Compliance (%)	Percent Noncompliance (%)
07/11	10:26	22	13	62.9	22	0	100.0	0.0
07/11	12:30	19	16	54.3	17	2	89.5	10.5
07/11	19:00	3	32	8.6	3	0	100.0	0.0
07/12	10:00	14	21	40.0	12	2	85.7	14.3
07/12	12:30	19	16	54.3	18	1	94.7	5.3
07/12	19:00	2	33	5.7	2	0	100.0	0.0

Table 19: Data from Fabbri Picnic Area lot. There were 26 parking spaces in this lot.

Date	Time	# of Cars in Lot	# of Empty Spaces	Percent Full (%)	Number Compliant	Number Noncompliant	Percent Compliance (%)	Percent Noncompliance (%)
07/11	10:26	6	20	23.1	6	0	100.0	0.0
07/11	13:24	18	8	69.2	15	3	83.3	16.7
07/11	19:12	0	26	0.0	0	0	n/a	n/a
07/12	10:17	7	19	26.9	7	0	100.0	0.0
07/12	12:47	18	8	69.2	15	3	83.3	16.7
07/12	19:18	4	22	15.4	4	0	100.0	0.0

Table 20: Data from Fabbri Memorial lot. There were 10 parking spaces in this lot.

Date	Time	# of Cars in Lot	# of Empty Spaces	Percent Full (%)	Number Compliant	Number Noncompliant	Percent Compliance (%)	Percent Noncompliance (%)
07/11	10:26	0	10	0.0	0	0	n/a	n/a
07/11	13:24	3	7	30.0	2	1	66.7	33.3
07/11	19:12	0	10	0.0	0	0	n/a	n/a
07/12	10:17	4	6	40.0	2	2	50.0	50.0
07/12	12:47	0	10	0.0	0	0	n/a	n/a
07/12	19:18	1	9	10.0	1	0	100.0	0.0

Table 21: Data from Otter Cliff Parking lot. There were 20 parking spaces in this lot.

Date	Time	# of Cars in Lot	# of Empty Spaces	Percent Full (%)	Number Compliant	Number Noncompliant	Percent Compliance (%)	Percent Noncompliance (%)
07/07	10:3p	19	1	95.0	15	4	78.9	21.1
07/07	12:30	10	10	50.0	10	0	100.0	0.0
07/11	10:00	18	2	90.0	15	3	83.3	16.7
07/11	12:30	17	3	85.0	15	2	88.2	11.8
07/11	19:12	7	13	35.0	5	2	71.4	28.6
07/12	10:00	20	0	100.0	19	1	95.0	5.0
07/12	12:3-	10	10	50.0	9	1	90.0	10.0
07/12	19:00	6	14	30.0	6	0	100.0	0.0

Table 22: Data from Jordan Pond House Main lot. There were 69 parking spaces in this lot.

Date	Time	# of Cars in Lot	# of Empty Spaces	Percent Full (%)	Number Compliant	Number Noncompliant	Percent Compliance (%)	Percent Noncompliance (%)
07/13	10:40	66	3	95.7	47	19	71.2	28.8
07/13	12:50	75	-6	108.7	53	22	70.7	29.3
07/13	19:40	38	31	55.1	28	10	73.7	26.3
07/14	10:23	70	-1	101.4	59	11	84.3	15.7
07/14	12:50	72	-3	104.3	60	12	83.3	16.3
07/14	19:11	30	39	43.5	19	11	63.3	36.3

Table 23: Data from Jordan Pond House Auxiliary 1 lot. There were 105 parking spaces in this lot.

Date	Time	# of Cars in Lot	# of Empty Spaces	Percent Full (%)	Number Compliant	Number Noncompliant	Percent Compliance (%)	Percent Noncompliance (%)
07/13	10:40	113	-8	107.6	80	33	71.0	29.0
07/13	12:50	104	1	99.0	78	26	75.0	25.0
07/13	19:40	13	92	12.4	7	6	53.8	46.2
07/14	10:23	94	11	89.5	69	25	73.4	26.6
07/14	12:50	117	-12	111.4	87	30	74.4	25.6
07/14	19:11	5	100	4.8	3	2	60.0	40.0

Table 24: Data from Jordan Pond House Auxiliary 2 lot. There were 57 parking spaces in this lot.

Date	Time	# of Cars in Lot	# of Empty Spaces	Percent Full (%)	Number Compliant	Number Noncompliant	Percent Compliance (%)	Percent Noncompliance (%)
07/13	10:40	56	1	98.2	43	13	76.8	23.2
07/13	12:50	63	-6	110:5	48	15	76.2	23.8
07/13	19:40	12	45	21.1	11	1	91.7	8.3
07/14	10:23	55	2	96.5	44	11	80.0	20.0
07/14	12:50	62	-5	108.8	44	18	71.0	29.0
07/14	19:11	5	52	8.8	4	1	80.0	20.0

Table 25: Data from Blue Hill Overlook lot. There were 38 parking spaces in this lot.

Date	Time	# of Cars in Lot	# of Empty Spaces	Percent Full (%)	Number Compliant	Number Noncompliant	Percent Compliance (%)	Percent Noncompliance (%)
07/14	10:21	12	26	31.5	10	2	83.3	16.3
07/14	12:41	4	34	10.5	3	1	75.0	25.0
07/19	10:28	18	20	47.4	13	5	72.2	27.8
07/19	13:20	23	15	60.5	22	1	95.7	4.3
07/19	18:59	12	26	31.6	10	2	83.3	16.7
07/20	19:45	81	-43	213.2	65	16	80.2	19.8

Table 26: Data from Cadillac Mountain Summit lot. There were 120 parking spaces in this lot.

Date	Time	# of Cars in Lot	# of Empty Spaces	Percent Full (%)	Number Compliant	Number Noncompliant	Percent Compliance (%)	Percent Noncompliance (%)
07/14	10:21	62	58	51.7	46	16	74.2	25.8
07/14	12:48	95	25	79.2	73	22	76.8	23.2
07/19	10:28	121	-1	100.8	87	34	71.9	28.1
07/19	13:20	119	1	99.2	95	24	79.8	20.1
07/19	18:59	72	48	60.0	56	16	77.8	22.2
07/20	19:45	106	14	88.3	86	20	81.1	18.9

Appendix H: Cost Benefit Analysis

Table 27: Cost benefit analysis of gated RFID pass solution.

	Revenue		Costs		Totals		
Year	**Total Revenue**	**Total Revenue at 100% Compliance**	**Passes Sold**	**Total RFID Pass Manufacturing Cost**	**Without Gated Solution**	**With Gated Solution**	**Difference**
1	$4,145,296.00	$4,882,563.02	129,949.00	$162,436.25	$4,145,296.00	$4,223,626.77	$78,330.77
2	$4,219,911.33	$4,970,449.15	132,288.08	$165,360.10	$4,219,911.33	$4,794,589.05	$574,677.72
3	$4,295,869.73	$5,059,917.23	134,669.27	$168,336.58	$4,295,869.73	$4,881,080.65	$585,210.92
4	$4,373,195.39	$5,150,995.74	137,093.31	$171,366.64	$4,373,195.39	$4,969,129.10	$595,933.71
5	$4,451,912.90	$5,243,713.67	139,560.99	$174,451.24	$4,451,912.90	$5,058,762.43	$606,849.52
6	$4,532,047.34	$5,338,100.51	142,073.09	$177,591.36	$4,532,047.34	$5,150,009.15	$617,961.81
7	$4,613,624.19	$5,434,186.32	144,630.41	$180,788.01	$4,613,624.19	$5,242,898.31	$629,274.13
8	$4,696,669.42	$5,532,001.68	147,233.75	$184,042.19	$4,696,669.42	$5,337,459.48	$640,790.06
9	$4,781,209.47	$5,631,577.71	149,883.96	$187,354.95	$4,781,209.47	$5,433,722.75	$652,513.28
10	$4,867,271.24	$5,732,946.11	152,581.87	$190,727.34	$4,867,271.24	$5,531,718.76	$664,447.52
Total							**$5,645,989.44**

	Item	**Individual Cost**	**Units**	**Total**
Upfront Installation Expenses	**Infrastructure**	$127,000.00	3	$381,000.00
	Technology	$17,500.00	6	$105,000.00
Recurring Cost	**Maintenance**	$1,750.00	6	$10,500.00

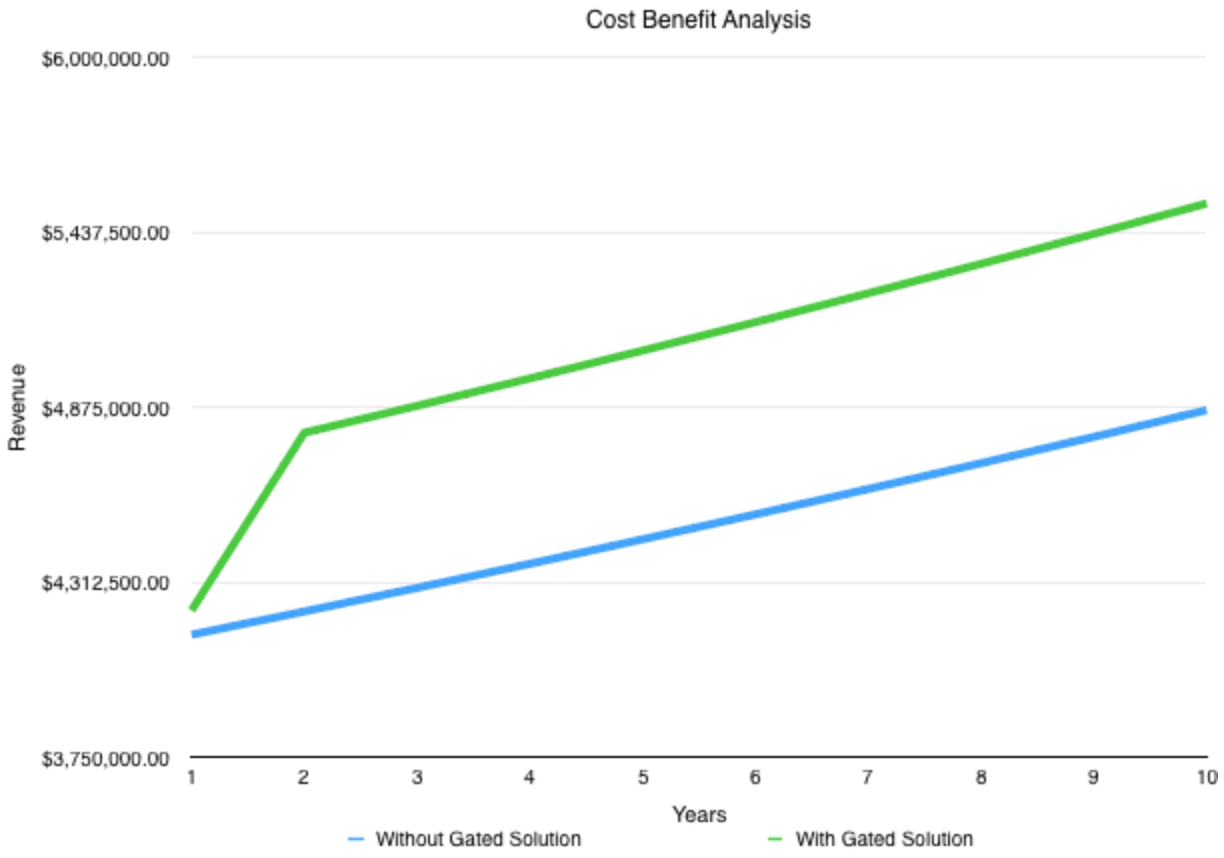

Figure 29: A graph of the cost-benefit analysis over the span of 10 years.

Appendix I: Noncompliance by State

Table 28: The noncompliance by state by time the count was taken.

	States	10:00 AM	12:30 PM	7:00 PM	Total
Alabama	AL	0	0	0	0
Alaska	AK	0	0	0	0
Arizona	AZ	0	0	0	0
Arkansas	AR	0	1	0	1
California	CA	0	0	0	0
Colorado	CO	0	0	0	0
Connecticut	CT	5	6	2	13
Delaware	DE	0	0	0	0
Florida	FL	7	6	2	15
Georgia	GA	0	7	0	7
Hawaii	HI	0	0	0	0
Idaho	ID	0	0	0	0
Illinois	IL	1	1	1	3
Indiana	IN	1	1	0	2
Iowa	IA	0	0	0	0
Kansas	KS	0	0	0	0
Kentucky	KY	0	0	0	0
Louisiana	LA	1	1	0	2
Maine	ME	31	46	12	89
Maryland	MD	8	7	0	15
Massachusetts	MA	19	25	2	46
Michigan	MI	3	6	3	12
Minnesota	MN	1	0	0	1
Mississippi	MS	0	0	0	0
Missouri	MO	0	0	0	0
Montana	MT	0	0	0	0
Nebraska	NE	0	0	0	0
Nevada	NV	0	0	0	0
New Hampshire	NH	11	11	2	24
New Jersey	NJ	7	4	1	12
New Mexico	NM	0	0	0	0

New York	NY	8	17	6	31
North Carolina	NC	2	3	0	5
North Dakota	ND	0	0	0	0
Ohio	OH	6	4	2	12
Oklahoma	OK	0	0	0	0
Oregon	OR	0	0	0	0
Pennsylvania	PA	8	12	5	25
Rhode Island	RI	1	2	0	3
South Carolina	SC	0	1	0	1
South Dakota	SD	0	0	0	0
Tennessee	TN	1	1	0	2
Texas	TX	0	0	0	0
Utah	UT	0	0	0	0
Vermont	VT	1	2	1	4
Virginia	VA	2	6	1	9
Washington	WA	0	0	0	0
West Virginia	WV	0	0	0	0
Wisconsin	WI	1	0	0	1
Wyoming	WY	0	0	0	0
Canada	CAN	1	4	0	5
Total		126	174	40	340

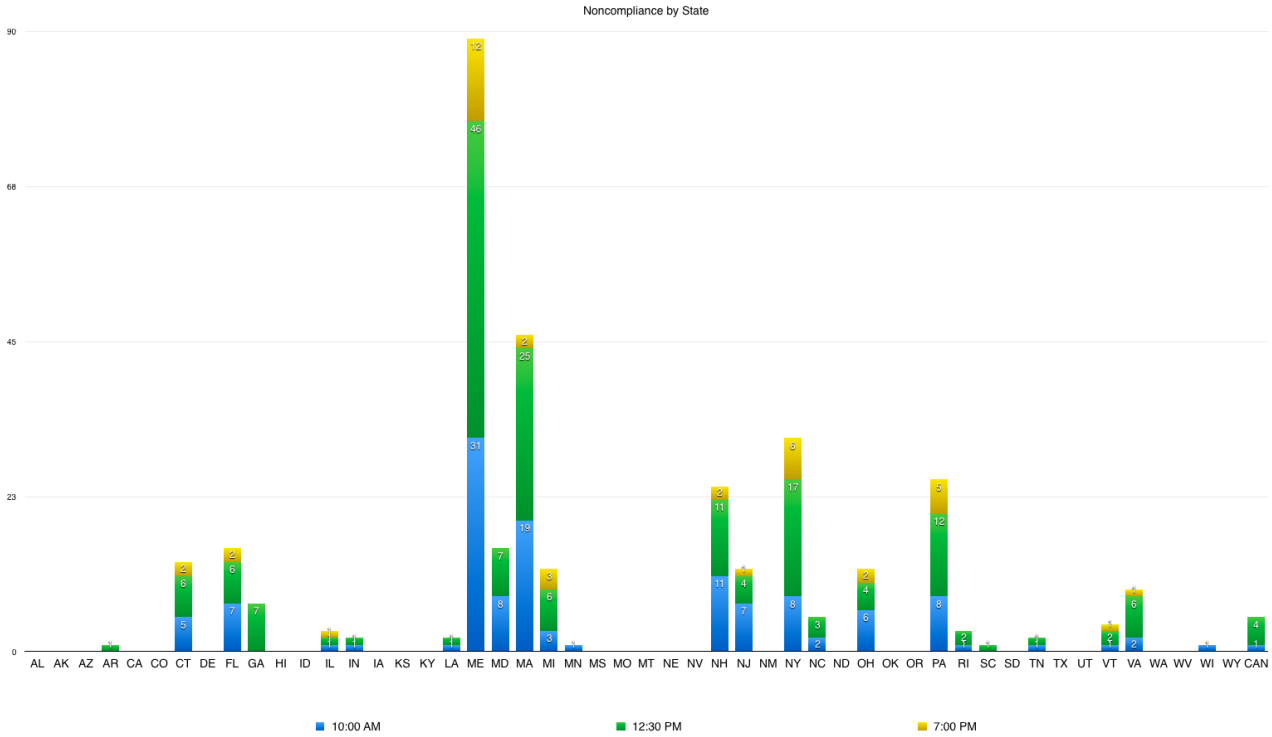

Figure 30: A graph of the noncompliance by state with the different time of counting shown by different colors.