Report SFRC-87/01

Abundance and Distribution of Ichthyoplankton in Florida Bay and Adjacent Waters

Everglades National Park, South Florida Research Center, P.O. Box 279, Homestead, Florida 33030

Digitized by the Internet Archive
in 2012 with funding from
LYRASIS Members and Sloan Foundation

http://archive.org/details/abundancedistrib00powe

ABUNDANCE AND DISTRIBUTION OF ICHTHYOPLANKTON IN FLORIDA BAY AND ADJACENT WATERS

SFRC-87/01

Allyn B. Powell, Donald E. Hoss, William F. Hettler,
David S. Peters, Larry Simoneaux, and Stephanie Wagner

US Department of Commerce
National Marine Fisheries Service, NOAA
Southeast Fisheries Center
Beaufort Laboratory
Beaufort, North Carolina

1987

TABLE OF CONTENTS

LIST OF TABLES..... i
LIST OF FIGURES..... ii
ABSTRACT..... 1
INTRODUCTION..... 2
METHODS..... 2
Ichthyoplankton Sampling..... 2
Processing of Samples..... 7
Larval Identification..... 7
Statistical Analysis..... 11
RESULTS AND DISCUSSION..... 11
General..... 11
Spotted Seatrout..... 13
Gear Assessment..... 13
Distribution and Abundance..... 27
Abundance and Distribution of Total Ichthyoplankton..... 23
CONCLUSIONS..... 34
ACKNOWLEDGMENTS..... 35
LITERATURE CITED..... 36
APPENDIX A..... 38

LIST OF TABLES

Table		Page
1.	Locations, depth and date of ichthyoplankton collection	4
2.	Summary of samples analyzed for total ichthyoplankton	8
3.	Distinguishing characteristics among snappers	10
4.	Summary of snapper data	12
5.	Summary of larval spotted seatrout	14
6.	Total fish larvae abundance	25
7.	Dominant ichthyoplankton from neuston tows	31

LIST OF FIGURES

Figure Page

1. Location of sampling stations..... 3

2. Bongo net assembly..... 6

3. Frequency distribution of larval spotted seatrout stages.....16

4. Frequency of spotted seatrout per sample.....18

5. Size and stage frequency of spotted seatrout.....19

6. Spotted seatrout relative abundance -- spring.....20

7. Spotted seatrout relative abundance -- summer.....21

8. Spotted seatrout relative abundance -- fall.....22

9. Mean seasonal sallinities and ranges.....24

10. Abundance of ichthyoplankton -- Spring.....27

11. Abundance of ichthyoplankton -- Summer.....28

12. Abundance of ichthyoplankton -- Fall.....29

13. Frequency of atherinids by tow type.....33

Appendix

A. Design and operation of a bongo net deployment system for small craft.....38

ABSTRACT

An ichthyoplankton survey was carried on in Florida Bay and adjacent waters that focused on the abundance and distribution of larvae of four target species--red drum (Sciaenops ocellata), snook (Centropomus undecimalis), gray snapper (Lutjanus griseus) and spotted seatrout (Cynoscion nebulosus). Twenty sampling stations were established--eight to document larval entry into Florida Bay and adjacent estuarine waters, and 12 within Florida Bay and adjacent estuarine waters--to provide insight into larval fish distribution and movement.

Spotted seatrout was the only target species whose larvae were regularly collected. No snook, one red drum and 16 potential gray snapper were collected. Based on the distribution of early stage larvae, spotted seatrout spawned in intermediate to high salinity waters within western Florida Bay and adjacent estuarine waters, but did not appear to spawn in brackish waters. We never collected spotted seatrout in the Keys area. Temporally, spotted seatrout have a protracted spawning season with spawning minimal during late fall and winter and most intense from May to September.

Based on the absence of early larval stages, gray snapper, snook and red drum apparently spawn outside of the Park. All larvae identified as snapper larvae were found in the ocean but young juveniles were found both in Florida Bay and the ocean. It appears that gray snapper spawn near offshore reefs in the Atlantic Ocean and at least some enter the Park as juveniles. The lack of larval snook and red drum in our samples does not indicate they are absent from the area. Adults spawn outside the Park, thus the larval supply may be susceptible to considerable mortality prior to migrating into the Park. They are less vulnerable to the gear because they are relatively well developed, and they may not be available to standard ichthyoplankton gear due to preference for the poorly sampled microhabitats (e.g., crevices, the bottom and channel edges).

Step-oblique tows with standard ichthyoplankton gear was appropriate for sampling early stage trout larvae to determine the spatial and temporal distribution of spawning. The development of different gear may be required to study the late larval and early juvenile stage.

Although our research focused on the four target species we were able to gain an insight into the distribution and abundance of non-gamefish within Florida Bay and adjacent waters. One of the most striking patterns was the dominance by and ubiquitous distribution of gobiid larvae.

INTRODUCTION

This research focuses on red drum (Sciaenops ocellatus), snook (Centropomis undecimalis), gray snapper (Lutjanus griseus), and spotted seatrout (Cynoscion nebulosus), and its objective is to determine the larval distribution of these species in the Park. Such information may be useful in determining spawning sites and points of entry into the Park.

Previous studies in the Park and adjacent areas have provided preliminary information on the spawning seasons and general life histories of adults (Croker 1960; Starck 1964; Fore and Schmidt 1973; Thue et al. 1982; Rutherford et al. 1982, 1983). There is less known about the early life history stages of these species although some information is available on sampling techniques and distribution in the Park and surrounding area (Jannke 1971; Starck 1970; Houde and Chitty 1976; Gilmore et al. 1983; Collins and Finucane 1984).

The general questions that we attempted to answer were:

1) How are larvae distributed in the Park?
2) What changes occur with season?
3) Where does spawning occur?
4) Where do larvae enter the Park?

METHODS

Ichthyoplankton Sampling

Ten larval fish collecting trips were made between March 1984 and September 1985. Twenty stations were selected in and around the Park (Fig. 1). The areas sampled include eight locations to document spawning or larval entry and twelve inside locations to document inter-regional larval distribution within Florida Bay and adjacent waters. Some stations were sampled only during the day, because of night-time navigational difficulties; some only during the night, because of time constraints; and some both day and night (Table 1). In addition, we included data on the four target species from a collecting trip in September 1985 designed to evaluate other ichthyoplankton gear.

Ichthyoplankton was taken with a 61-cm bongo sampler fitted with 333 µm mesh nets that was fished from the side of 6.7-m-long boat. Towing from the side kept the nets from fishing in the boat's wake. A mast-boom assembly and an electric winch were used to lower and raise the sampler (Fig. 2 and Appendix A). At each station, three oblique tows and one surface (neuston) tow were made. We took replicate step-oblique tows to insure against loss or breakage and so material could be archived for future studies (e.g., feeding) that were not within the objectives of this study. The oblique tows consisted of lowering the net to within 1 m of the bottom while underway at towing speed, fishing at that depth for 1.5 min, raising the sampler to within 1 m of the surface and fishing until 3 min elapsed. Towing speed was approximately 1 m/sec and was maintained by running the outboard engine at 1000 rpm. A flow meter mounted in the net mouth gave readings for calculating water volumes filtered. Neuston tows, also made at 1 m/sec, were made with the net mouth approximately one-half

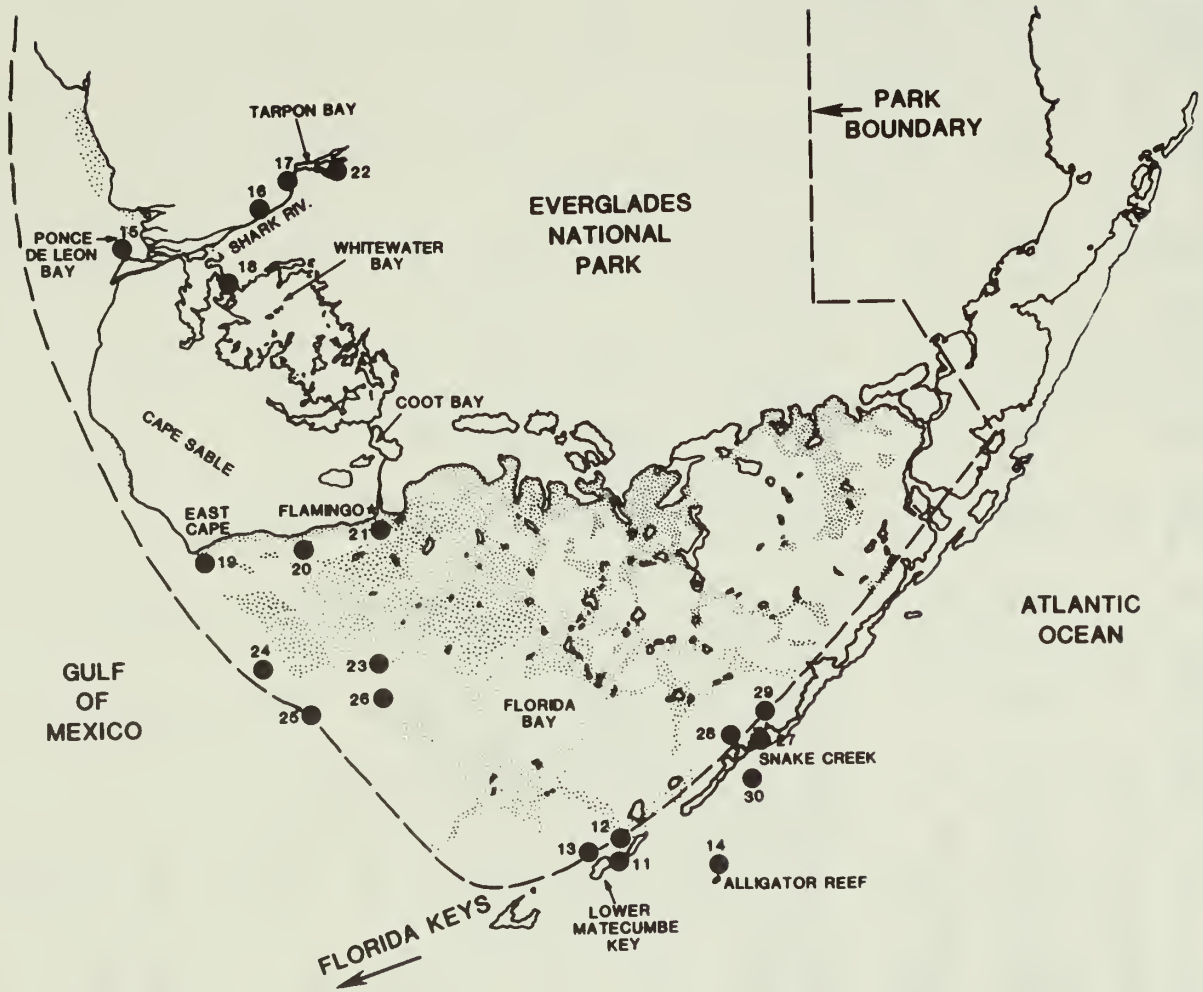

Figure 1. Location of ichthyoplankton sampling stations.

Table 1. Locations, depth, and date of collections of ichthyoplankton stations in Everglades National Park. D designates day sample only; N designates night sample only; DN designates day and night sample; dash (-) indicates no sample taken.

Station	Location	Depth (m)	Date of Collection										
			Mar 84	May 84	Jun 84	Jul 84	Aug 84	Sep 84	Nov 84	Nov/Dec 84	Apr 85	Jun 85	Sep 85
11	Lower Matecumbe Key Channel 5	2.7	D	DN	DN	DN	N	N	N	N	N	N	DN
12	Peterson Key Bank Bowlegs Cut	2.4	D	DN	DN	DN	N	N	N	N	N	N	-
13	Old Dan Bank-- Park Service Boundary Marker	2.4	D	DN	DN	DN	N	N	N	N	N	N	-
14	Alligator Reef	8.2	D	DN	DN	DN	N	-	N	N	N	N	-
15	Ponce De Leon Bay	3.0	D	D	D	D	D	D	D	D	D	D	D
16	Shark River Marker "6"	3.0	D	D	D	D	D	D	D	D	D	D	-
17	Shark River Marker "8"	2.1	D	D	D	D	D	D	D	D	D	D	-
18	Cormorant Pass Marker "4"	1.5	D	D	D	D	D	D	D	D	D	D	-
19	East Cape Sable	2.7	D	DN	DN	DN	DN	DN	DN	DN	D	DN	DN
20	Middle Ground	2.7	D	D	DN	DN	DN	DN	DN	DN	D	DN	-
21	Flamingo Channel Marker "10"	1.8	D	DN	DN	DN	DN	DN	DN	DN	DN	DN	-
22	Tarpon Bay	1.5	-	D	D	D	D	D	D	D	D	D	-
23	Man-of-War Channel	3.0	-	D	D	D	D	D	D	D	D	D	-
24	Oxfoot Bank--near Marker "11"	3.0	-	D	D	D	D	D	D	D	D	D	-
25	Oxfoot Bank-- Between Markers "8" and "10"	3.0	-	D	D	D	D	D	D	D	D	D	D

Table 1 Contd.

Station	Location	Depth (m)	Date of Collection										
			Mar 84	May 84	Jun 84	Jul 84	Aug 84	Sep 84	Nov 84	Nov/Dec 84	Apr 85	Jun 85	Sep 85
26	Blue Bank-- West Edge	1.8	-	D	D	D	D	D	D	D	D	D	-
27	Snake Creek	3.6	-	D	D	D	D	DN	N	N	N	N	D
28	Cotton Key	1.8	-	D	D	D	D	N	N	N	N	N	-
29	Cotton Key Basin Marker "78"	2.1	-	-	D	D	D	N	N	N	N	N	-
30	Whale Harbor Channel - Entrance Marker "1"	2.1	-	-	-	-	-	-	N	N	N	N	-

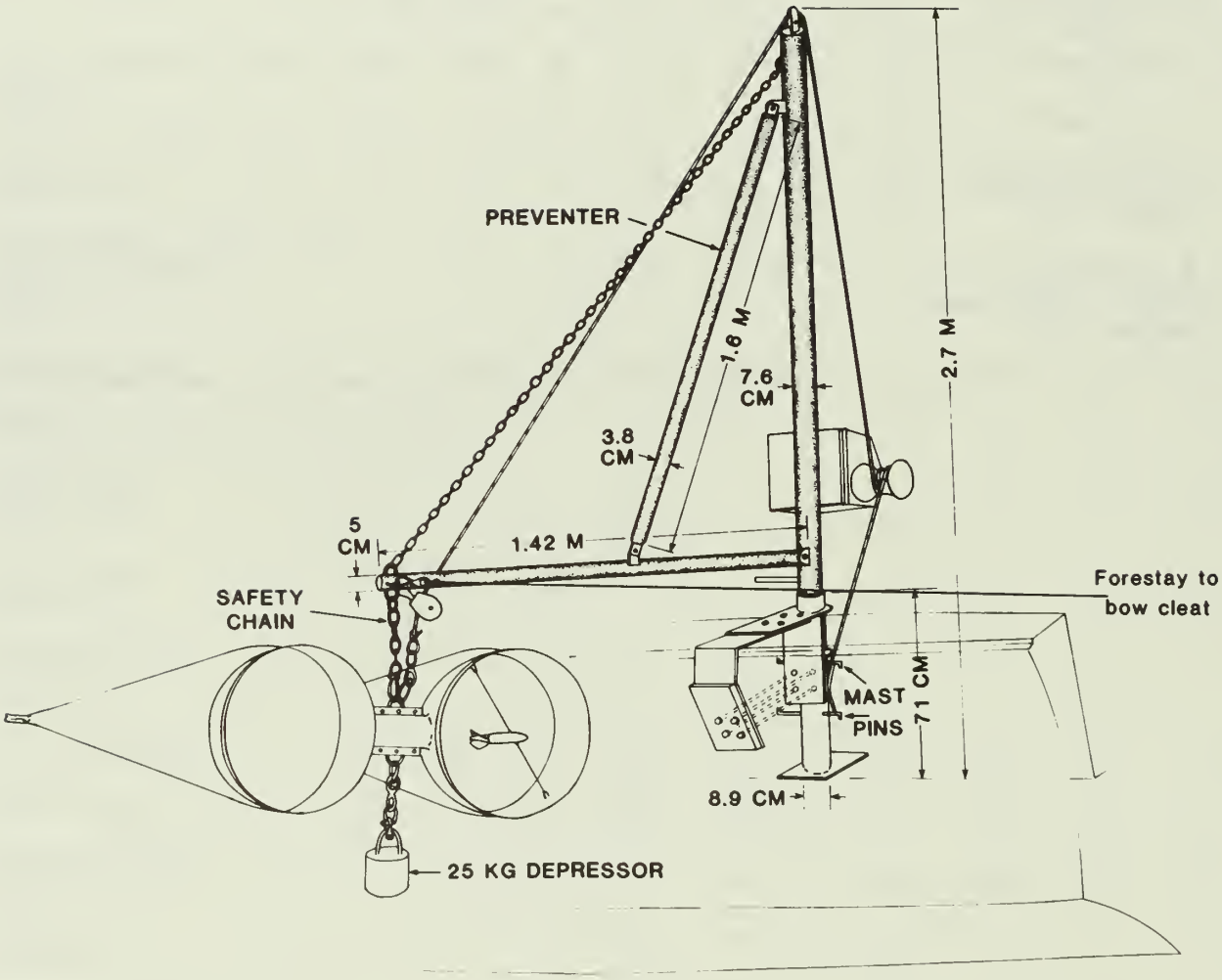

Figure 2. Bongo net deployment, mast, boom and winch assembly. Safety chain is detached before net is deployed. Preventor bar is unpinned at lower end and safety chain is attached before net is raised out of water and brought aboard. Winch shown was later replaced with a self-tailing automatic windlass. Mast assembly was mounted 4 meters from the bow on the boat's starboard side.

submerged. Tows were made in a right-hand circle about 50 m in diameter to prevent entanglement of the nets or towline in the propeller.

Material from the outboard net was washed into the cod end with seawater from a hose, mangrove leaves, seagrasses, macroalgae and large ctenophores were removed. Material was collected on a 200 µm screen and preserved in glass 1-liter jars in a 10% buffered seawater-Formalin solution.

Temperature and salinity of the surface and bottom waters was measured using a YSI temperature/salinity recorder. The two readings at each station were averaged.

Collections were made independent of current direction and tide stage. Night collections, conducted to provide insight into both the net avoidance problem and the possibility of diel changes in the water column in response to ambient light, were made regardless of moon phase. Night collections were made with deck lights out to reduce larval attraction or avoidance.

Processing of Samples

Samples were processed in three stages. First, all fish larvae were removed from the sample; second, target species were removed, measured and staged; third, non-target species were identified to the lowest taxon possible (generally to the family level). For this study, we identified target species from at least one neuston and one step-oblique tow sample for each station, for both day and night periods on all sample dates. This resulted in the processing of 467 samples. We identified non-target species from at least one sample per station for seven cruises during the following months -- March 1984, May 1984, June 1984, July 1984, August 1984, September 1984, and November 1984. Additional samples, although not a complete series from late November 1984 and April 1985 were also examined. This resulted in the processing of 231 samples (Table 2).

Larval Identification

Larval identification was accomplished by reference to published descriptions (Fable et al. 1978; Richards and Saksena 1980; Holt et al. 1981; Lau and Shafland 1982) of laboratory-reared specimens and by studying preserved specimens from reference collections. Although gray snapper have been described (Richards and Saksena 1980), and they can be separated from vermillion snapper (*Rhomboplites aurorubens*) larvae (Laroche 1977), other snappers that co-occur with the gray snapper in this area have not. Therefore, the separation of snapper larvae to species is not possible. It is not until the juvenile stage when fins, vomarine tooth patches, gill rakers, scales and coloration develops that identification to species is possible for snapper. We have considered all snapper larvae that do not have the full complement of meristics to be "*Lutjanus sp.*" ("snappers"). Those snappers that have the full meristic complement could be divided into three groups --gray snapper, lane snapper (*L. synagris*), and yellowtail snapper (*O. chrysurus*) (Table 3). Gray snapper, lane snapper and yellowtail snapper were the only species collected in a concurrent juvenile survey within Florida Bay (Thayer et al. 1987), but most snapper we collected were from Alligator Reef (Station 14) that is outside of Florida Bay. Here a greater diversity of snapper species co-occur (Starck 1970).

Table 2. Summary of samples taken for analysis of total ichthyoplankton. D indicates day step olbique tow; N, night step oblique tow; DS, day neuston tow; NS, night neuston tow. When more than one sample was taken the number appears in parentheses following the tow type.

	Date of Collection								
Station	Mar 84	May 84	Jun 84	Jul 84	Aug 84	Sep 84	Nov 84	Nov/Dec 84	Apr 85
11	D	D N	D N	D N	N	N NS	N	N	N
12	D	D N	D N	D N	N	N(2) NS	N	N	-
13	D	D N NS	D N	D N	N	N(2) NS	N	N	-
14	D	D N NS	D N	D N	N	-	N	N	N
15	D DS	D DS	D	D	D	D DS	D	D	-
16	D DS	D	D	D	D	D	D	D	D
17	D	D	D	D	D	D DS	D	D	D
18	D DS	D D	D	D	D	D DS	D	D	-
19	D DS	D N N	D N	D N	D N	D DS	D N	D N(2) NS	D
20	D	D	D N	D	D	D(2) DS	D N	N	-
21	D DS	D N	D N	D N	D N	D DS	D N	N	-
22	-	D	D	D	D	D(2) DS	D	-	-
23	-	D DS	D	D	D	D DS	D	D	D

Table 2 (Contd)

Station	Mar 84	May 84	Jun 84	Jul 84	Aug 84	Sep 84	Nov 84	Nov/Dec 84	Apr 85
	Date of Collection								
24	-	D DS	D	D	D	D DS	D	D	D
25	-	D	D	D	D	D DS	D	D	D
26	-	D DS	D	D	D	D DS	D	D	D
27	-	D	D	D	N	D(2) DS N(3) NS	N	N	-
28	-	D DS	D	D	N	N NS	N	N	N
29	-	-	D	D	N	N NS	N	-	N
30	-	-	-	-	N	-	N	N	N
Total Samples	19	33	28	28	22	44	23	22	12

Table 3. Groups of snapper sharing the same meristic counts and distinguishing characters among groups with characteristics from Randall (1983).

Group	Species	Characteristics
gray snapper	gray snapper	14 dorsal rays 6-11 lower gill rakers
	mutton snapper	
	schoolmaster	
	cubera snapper	
	dog snapper	
lane snapper	lane snapper	12 dorsal rays and 8-13 lower limb gill rakers
	mahogany snapper	
yellowtail snapper	yellowtail snapper	21-22 lower limb gill rakers

We used developmental stage as an indication of larval age. Preflexion, flexion and postflexion stages occurred before, during and after the upward flexion of the notochord tip, respectively. For gray snapper, flexion occurs at about 4.2 mm SL, postflexion at about 6.2 mm SL and the juvenile stage at about 12.0 mm SL (Richards and Saksena 1980). For spotted seatrout (based on our material), flexion occurs at about 2.4 mm SL and postflexion at about 4.1 mm SL. We did not observe the size when the juvenile stage began, but, based on Powles and Stender (1978), the juvenile stage should begin by at least 8 mm SL.

Statistical Analysis of Sampling Techniques

In order to evaluate sampling methods, we compared differences in the frequency of larval trout development stages between day and night tows and differences in numbers of trout larvae between step-oblique and neuston tows. Twelve day and twelve night stations from stations 19, 20 and 21 (Fig. 1) were used for comparisons between day and night tows. We only used those samples where trout were captured in at least one of the day-night samples. To compare differences between step-oblique and neuston tows, we used 32 concurrent day samples and 12 concurrent night samples. We assumed that sample densities followed a negative binomial distribution and, therefore, data were transformed (Ln x +1) for comparing means. Means from a contagious distribution were compared as outlined by Elliot (1977) and, when variances were unequal, Sokal and Rohlf (1981).

RESULTS AND DISCUSSION

General

With the exception of spotted seatrout, the other target species were conspicuously absent from our collections. No snook, one red drum and 16 potential gray snappers were collected. The one red drum larvae was collected in late November near Flamingo (Station 21). The majority of snapper larvae were collected from Alligator Reef (Station 14) -- the only station where preflexion snapper larvae were taken (Table 4). The presence of postflexion larvae/juveniles at near-inlet stations (12 and 13) indicated that snappers enter the Park as advanced larvae. The absence of preflexion snapper larvae in our study and the reported rare occurrence of ripe adult snappers within the Park (Rutherford et al. 1983), supports the suggestions of Croker (1960), Starck (1964) and Rutherford et al. (1983) that gray snapper spawn outside the Park in offshore waters. The spawning habitat for gray snapper, that immigrate into the Park is apparently offshore reefs such as Alligator Reef where spawning has been reported (Starck 1970). The presence of large juvenile gray snapper in northwestern Florida Bay (Starck 1970; Thayer et al. 1987), but the absence of larvae and small juveniles that we and Starck (1970) found there suggested that gray snapper in northwestern Florida Bay may be recruited from adults spawning over reef areas south and east of northwestern Florida Bay. The evidence, however, is not substantial and does not preclude spawning in the Gulf of Mexico.

Red drum larvae previously have been collected in large numbers at the entrance to Little Shark River (Jannke 1971). These larvae were collected with a 1-meter net fished, at night, during the fall season as red drum

Table 4. Summary of snapper data. N indicates neuston tow; SO indicates step-oblique tow.

Date	Station	Time	Tow Type	Number Caught	Mean SL mm	STAGE FREQUENCY Pre-flexion	Flexion	Postflexion Juvenile	Gray snappers (N)
Jun 1984	14	0855	SO	4	3.7	4	0	0	-
		0930	N	1	2.2	1	0	0	-
		2110	N	1	2.2	1	0	0	-
Jul 1984	12	0300	N	1	-	0	0	1	-
		0154	N	1	11.5	0	0	1	1
		2229	SO	7	14.7	0	0	7	6
		2252	SO	6	13.8	0	0	6	5
		2307	SO	2	15.1	0	0	2	1
Aug 1984	14	2136	SO	1	18.5	0	0	1	1
		2244	N	1	12.0	0	0	1	1
Sep 1985	11	2205	N	1	12.5	0	0	1	1
			TOTAL	26		6	0	20	16

larvae entered into Everglades estuarine waters. These were relatively well developed nektonic larvae (4.0 to 8.5 mm SL), and, on the basis of a laboratory study of red drum development (Holt et al. 1981), we estimated Jannke's larvae to be from late flexion to postflexion stages. They had, therefore, been spawned outside of Florida Bay. Jannke's relatively large collection of red drum from this location (which is only 3 km from our Station 15), compared to our collections, could be due to his sampling scheme that consisted of intensive and nighttime sampling. Our sampling scheme was extensive and we did not sample during the night at our Station 15 that was in close proximity to Jannke's station. Furthermore, we did not sample during October, a time when red drum larvae were most abundant in Jaunkee's collections. Peters and McMichael (1987), using a 1-m diameter conical net for surface and bottom tows, collected numerous red drum larvae in Tampa Bay, Florida both during the day and night. They did not, however, collect red drum in daytme surface tows. Their larvae were smaller than those captured by Jannke (1971) and they commented that red drum may spawn further offshore from the Everglades than those in Tampa Bay.

Snook larvae have rarely been collected. Gilmore et al. (1983) collected two relatively large larvae (postflexion stage) at an ocean inlet station in east-central Florida. These observations led them to believe that snook spawning did not occur in lagoons or inlets, but shallow nearshore oceanic waters.

We believe that the absence or rarity of larval snook, red drum and gray snapper can be attributed to a complex of factors that influence larval availability and vulnerability. There is good evidence that these species spawn outside the Park (e.g., Starck 1970; Rutherford et al. 1982, 1983; Collins and Finucane 1984; this study). Immigrants into the Park have undergone significant natural mortality and growth. They are, therefore, relatively uncommon to rare in abundance, and have become better able to avoid standard ichthyoplankton gear. In addition, they may not be available to the gear due to habitat preferences (bottom, oyster bars, crevices, and channel edges) upon their immigration to the sampling area. Such differential availability and/or vulnerability during ontogeny has been demonstrated in our study for spotted seatrout.

Future studies that deal with estuarine-dependent fishes that spawn outside of estuaries and are relatively uncommon will be most valuable if innovative sampling gear for late stage larva are designed. This gear may include a bow-mounted surface net, a high-speed, two-boat, larval-fish trawl, and a bottom sled. Furthermore, because of net avoidance, nighttime sampling should be employed, regardless of gear type.

Spotted Seatrout

Gear Assessment

Our trout larvae collections were dominated by preflexion stage larvae (Table 5, Fig. 3). We believe that the frequency distribution of larval stages reflected the differential vulnerability of larvae to our gear (net avoidance by larger larvae), dispersal of larvae from a spawning aggregation (older larvae would be more dispersed), and natural mortality.

Table 5. Summary of larval spotted seatrout data. N following the station number indicates neuston tow; all other tows are step oblique.

Date	Station	Time	Temperature °C	Salinity o/oo	Number of Trout	Mean SL mm	s	Stage (Frequency) Pre-flexion	Flexion	Post-Flexion
Mar 1984	18	Day	26.9	28.0	2	2.5	0.5091	1	1	0
	20	Day	22.0	35.4	3	2.3	0.0400	3	0	0
May 1984	15	Day	26.7	34.8	4	2.8	0.7698	2	2	0
	16	Day	28.3	30.6	1	3.8	-	0	1	0
	18	Day	28.1	35.0	6	2.5	1.2288	5	0	1
	19	Day	27.8	36.5	5	1.8	0.2552	5	0	0
	19	Night	27.5	37.3	7	1.8	0.3638	7	0	0
	20	Day	28.5	37.2	1	3.3	-	0	1	0
Jun 1984	18	Day	31.1	26.9	2	2.4	0.6364	1	1	0
	19	Day	28.4	36.8	2	2.8	0.4950	1	1	0
	19	Night	29.2	35.0	4	2.6	0.4861	2	2	0
	20	Day	29.9	36.5	3	2.5	0.2254	1	2	0
	20	Night	28.5	35.5	2	2.0	0.0424	2	0	0
	21	Night	28.0	39.0	1	4.3	-	0	0	1
Jul 1984	18	Day	31.0	22.0	3	2.0	0.2506	3	0	0
	19	Day	29.0	30.7	12	2.7	3.0169	0	1	1
	19	Night	31.0	31.8	2	1.8	0.2828	2	0	0
	20	Day	30.0	32.0	8	1.7	0.1437	8	0	0
	20	Night	31.0	33.0	6	3.0	0.5520	1	5	0
	20N	Night	31.0	33.0	2	2.2	0.5940	1	1	0
	21	Day	30.3	31.3	4	2.3	1.3610	3	0	1
	21	Night	31.5	32.5	14	1.6	0.1326	4	0	0
	21N	Night	31.5	32.5	1	1.7	-	1	0	0
	24	Day	29.0	35.9	22	1.5	0.1358	22	0	0
Aug 1984	15	Day	30.0	23.8	6	2.1	0.5742	5	1	0
	17	Day	30.5	7.7	1	6.1	-	0	0	1
	18	Day	31.0	22.0	8	1.8	0.1414	8	0	0
	19	Day	29.3	34.0	3	1.7	0.1501	3	0	0
	19	Night	29.5	37.3	9	2.1	0.3384	6	3	0
	19N	Night	29.5	37.3	1	1.7	-	1	0	0
	20	Day	29.5	35.2	5	1.65	0.1792	5	0	0
	20N	Day	29.5	33.0	2	1.6	0.0707	2	0	0
	20N	Night	29.5	33.0	6	1.9	0.3087	5	1	0
	21	Day	29.3	34.5	35	1.8	0.2374	34	1	0
	21	Night	29.5	32.8	3	2.6	1.9473	2	1	0
	21N	Night	29.5	32.8	2	3.0	0.7920	0	2	0

Table 5 Contd.

Date	Station	Time	Temperature °C	Salinity o/oo	Number of Trout	Mean SL mm	s	Stage (Frequency) Preflexion	Flexion	Post-Flexion
Sep 1984	19	Day	28.0	29.9	1	2.9	-	0	1	0
	20	Day	28.0	29.9	7	1.9	0.4332	6	1	0
	20	Day	28.0	29.9	5	1.9	0.3227	5	0	0
	20N	Day	28.0	29.9	1	1.8	-	1	0	0
Apr 1985	15	Day	23.0	35.0	5	1.7	0.1718	5	0	0
	18	Day	22.0	32.0	79	1.6	0.1623	78	1	0
	18N	Day	22.0	32.0	7	1.7	0.1177	7	0	0
	19	Day	21.5	37.5	1	1.4	-	1	0	0
	20	Day	21.5	40.0	6	2.1	1.0112	5	1	0
	25	Day	21.5	39.0	2	1.6	0.1273	2	0	0
	26	Day	22.0	40.0	1	1.7	-	1	0	0
Jun 1985	16	Day	29.5	26.0	1	3.8	-	0	1	0
	18	Day	29.0	33.0	14	1.9	1.0543	12	1	1
	18N	Day	29.0	33.0	1	2.0	-	1	0	0
	19	Day	28.0	38.0	106	1.6	0.1705	105	1	0
	19N	Day	28.0	38.0	1	2.0	-	1	0	0
	19	Night	30.0	37.7	18	1.8	0.3453	16	2	0
	19N	Night	30.0	37.7	1	2.0	-	1	0	0
	20	Day	29.7	39.8	4	2.3	0.7091	2	2	0
	20	Night	28.0	38.7	2	1.7	0.2687	2	0	0
	21	Day	29.8	39.2	91	1.8	0.2987	88	3	0
	21N	Day	29.8	39.2	4	1.7	0.2026	4	0	0
	21	Night	27.3	39.0	39	2.0	0.5082	33	5	1
	21N	Night	27.3	39.0	13	2.2	0.3707	10	3	0
	24	Day	28.9	38.0	4	1.9	0.6440	3	1	0
Sept 1985	15	Day	28.0	31.0	7	2.9	0.7464	4	3	0
	19	Day	28.0	38.0	52	2.2	0.3202	46	6	0
	19	Night	28.0	37.0	20	3.5	0.3751	0	20	0
	25	Day	27.5	37.0	27	2.1	0.3705	25	2	0
				Total	718			610	81	7

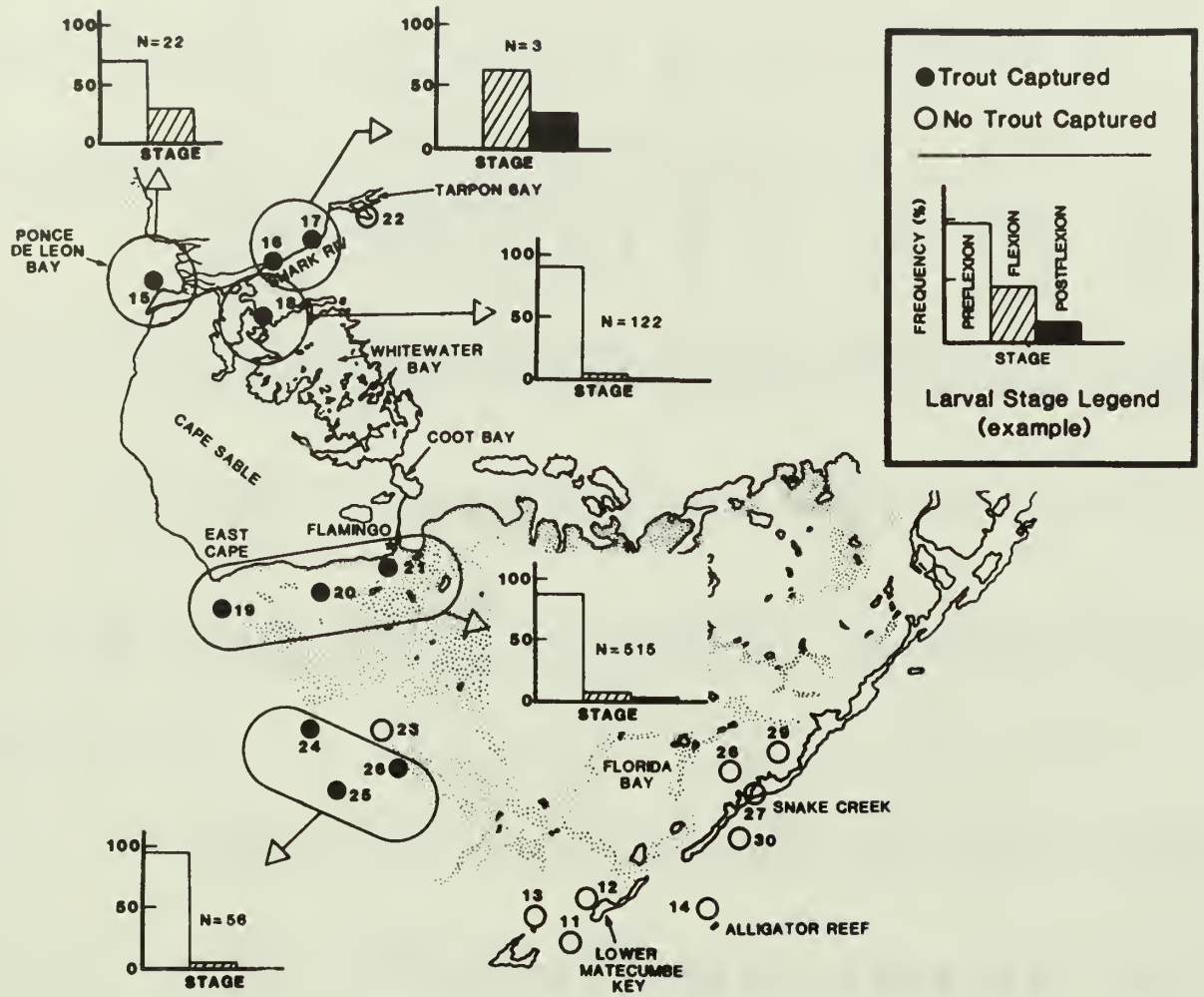

Figure 3. The frequency distribution of larval spotted seatrout developmental stages. All the larvae captured by the bongo sampler (N = 719) are included.

Because of high variability in abundance of trout larvae and the limited sampling possible at any one given time, we chose to use the data primarily in a qualitative way. The number of trout larvae per sample resembles a negative binomial distribution (Fig. 4) that imposes certain restraints and limitations on the use of our abundance data. We feel our sampling scheme was not adequately designed to make quantitative or statistical areal comparisons.

A greater density of trout larvae were taken by day step-oblique tows than night step-oblique tows (22.9 vs. 8.5 per tow), but differences of means from transformed data were not significant ($0.30 < P > 0.20$). We concluded that tows taken during daylight adequately sampled recently-spawned planktonic larvae. There appeared, however, to be a slightly greater proportion of larger larvae taken at night (Fig. 5). Although there was a slightly greater proportion of flexion larvae captured at night, very few postflexion larvae were collected (Fig. 5). This suggested to us that these older nektonic larvae were not accessible to the gear and to study this life history stage would require the development of different sampling gear.

More trout larvae were captured in step-oblique tows than neuston tows both during the day (14.3 vs. 0.5 per tow) and night (8.6 vs. 2.4 per tow). Neuston tows filter approximately one-half the volume of water of step-oblique tows and they would be expected to catch half as many larvae if they were distributed uniformly. The relatively low catch in the day neuston-tows may indicate active avoidance of the surface by seatrout larvae during daylight hours, as there was a greater proportion of seatrout larvae in the neuston at night than day. We concluded from our gear assessment analysis that step-oblique tows are preferable to neuston tows, especially during daylight, and that they can provide information valuable in describing spawning areas both spatially and temporally. Step-oblique tows at night provided very limited additional information beyond day-tows in describing the life history of postflexion larvae.

Distribution and Abundance

Seatrout larvae were captured throughout the year except cruises in November and December (Table 5, Figs. 6-8). They never were the dominant species (Figs. 6-8). We collected the majority of trout during late spring and throughout the summer. Our seasonal collections along with those of Jannke (1971) demonstrate that spawning is minimal during late fall and throughout the winter months, peaks during mid-to-late spring continues during the summer at moderate levels, then declines with the onset of winter.

The spatial distribution of trout larvae (Table 5, Figs. 3, 6-8) and juveniles (Thayer et al. 1987) suggested that spawning and the early life history of spotted seatrout occurs mainly in the western section of the Park, but studies by Park personnel indicates that there is some spawning activity in northeastern Florida Bay, an area not sampled by us. To determine the specific areas where spawning occurred, we used the occurrence of preflexion larvae to indicate recent spawning (Fig. 3). Based on a laboratory study (Fable et al. 1978), preflexion larvae are no older than approximately 7-days. Spawning appeared to be most intense in

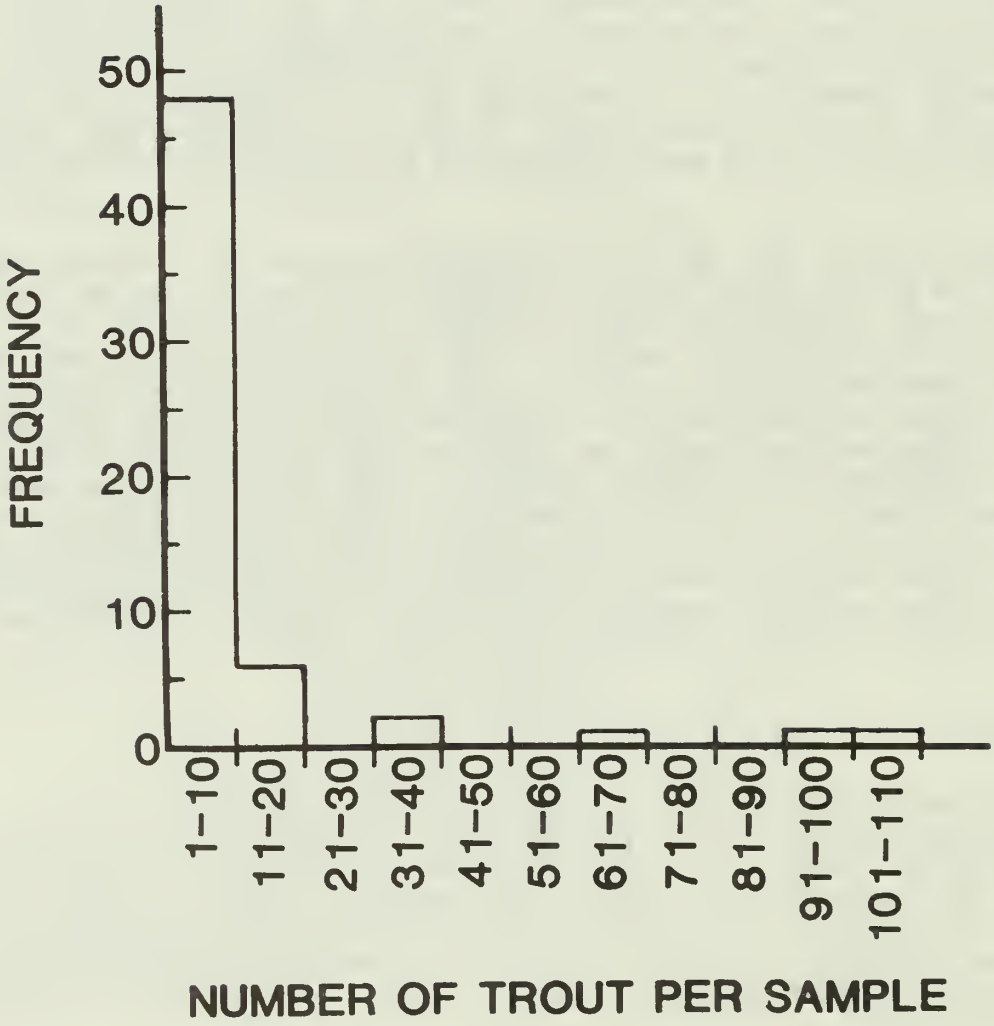

Figure 4. The frequency of spotted seatrout per sample.

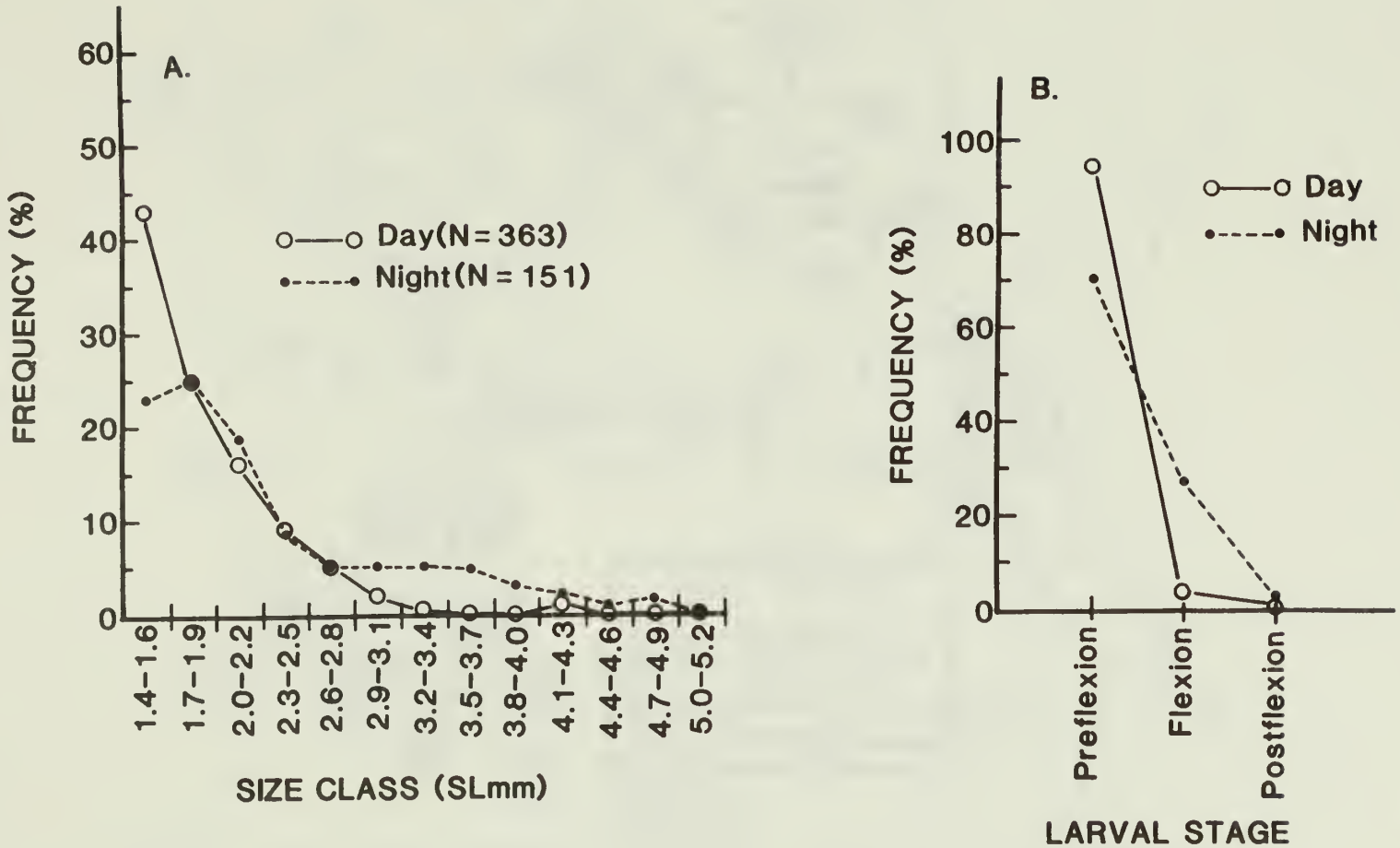

Figure 5. The size-class frequency (A) and larval developmental stage frequency (B) of spotted seatrout larvae by day and night. Data include all paired day-night tows.

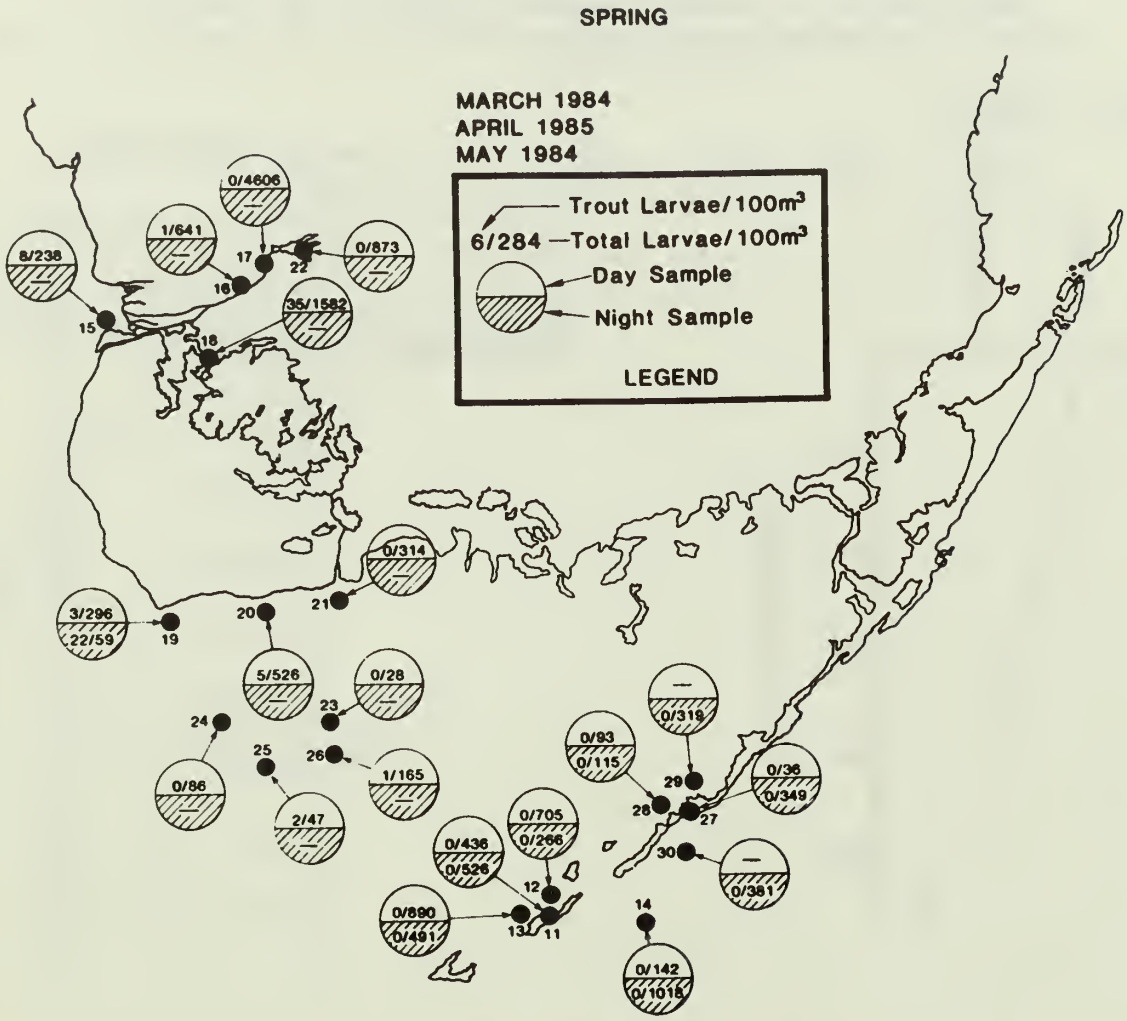

Figure 6. The relative abundance of spotted seatrout and total fish larvae during spring. Dash indicates no sample taken.

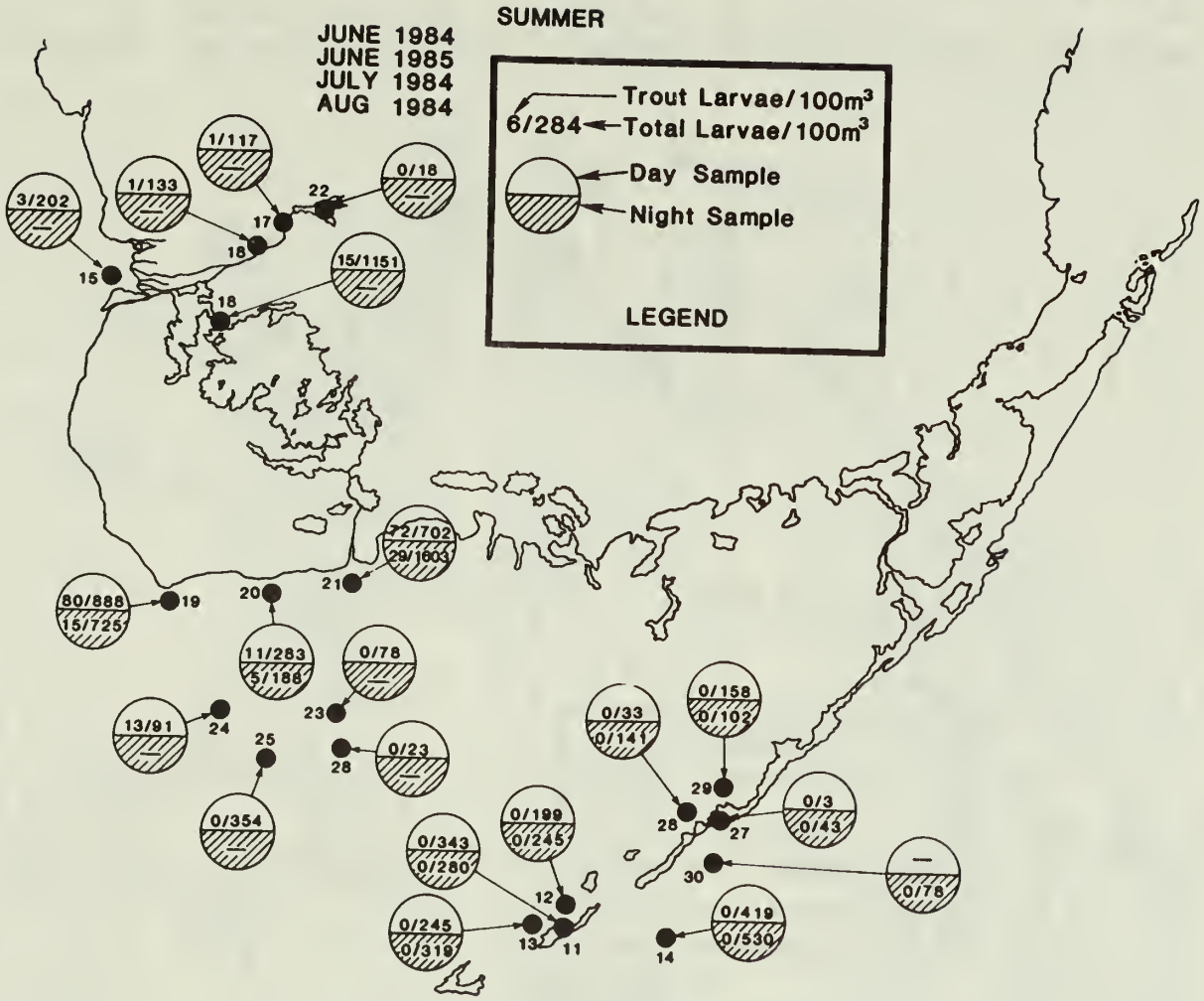

Figure 7. The relative abundance of spotted seatrout and total fish larvae during summer. Dash indicates no sample taken.

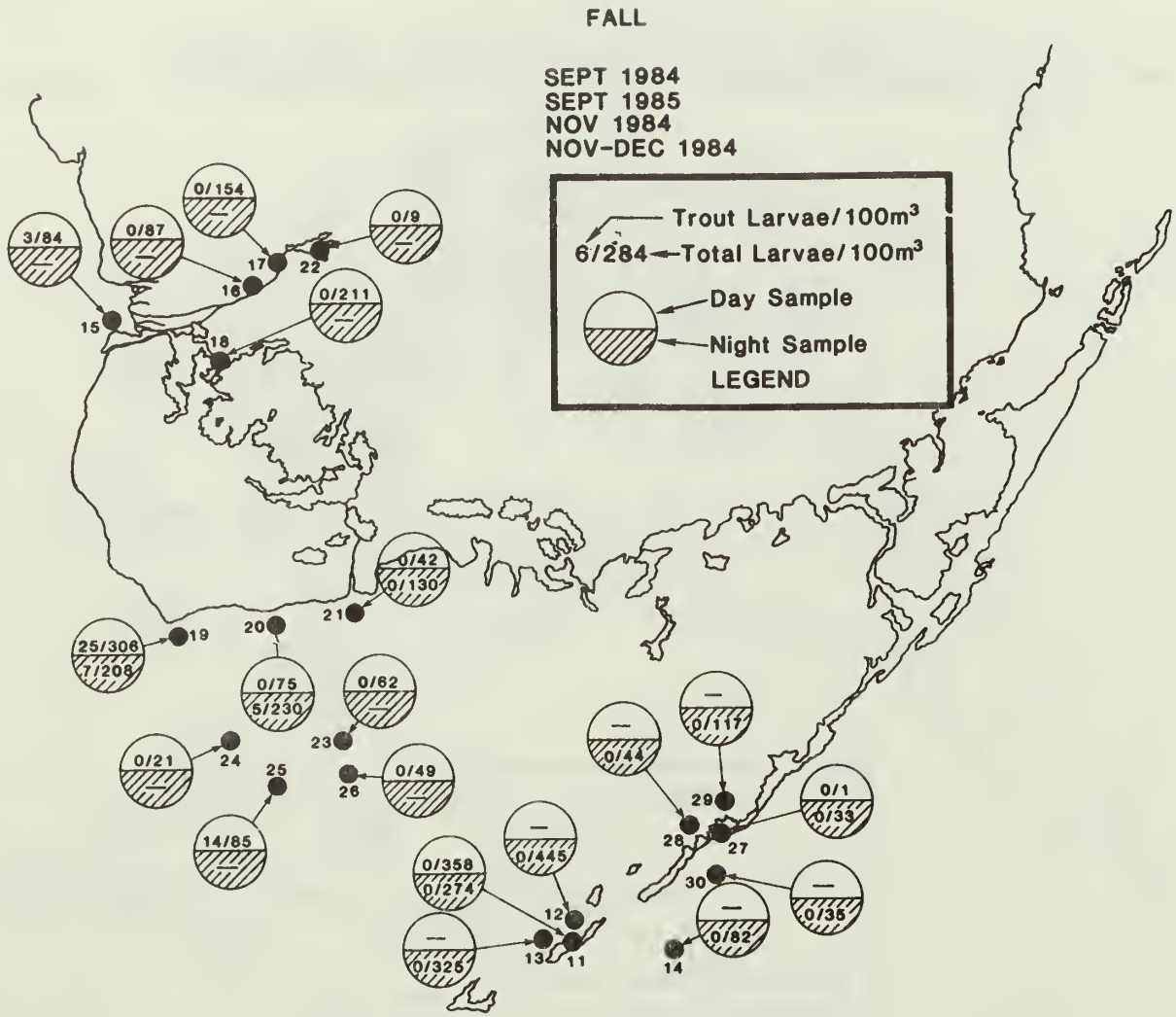

Figure 8. The relative abundance of spotted seatrout and total fish larvae during fall. Dash indicates no sample taken.

the Cormorant Pass area (Station 18) and in the northwestern portion of Florida Bay (Stations 19,20, and 21). Moderate spawning appeared to occur in the southwestern part of Florida Bay (Stations 24,25, and 26) and in Ponce de Leon Bay (Station 15) in the northwest area of our study. On the western side, we never caught trout in Man of War Channel (Station 23) nor Tarpon Bay (Stations 22) and preflexion trout were never captured in the upper Shark River (Stations 16 and 17). Studies by Park personnel also indicate that spotted seatrout spawn mainly in western Florida Bay.

To determine if we could discern any relationship between station salinity and presence of preflexion trout larvae, we began by plotting seasonal salinities against stations (Fig. 9). There are, in general, three groups of stations with different salinity characteristics. Most of the stations we sampled were in relatively high salinity waters. Two, Cormorant Pass (Station 18) and Ponce de Leon Bay (Station 15), had intermediate salinities while three in the upper Shark River (Stations 16 and 17) and in Tarpon Bay (Station 22) had low and highly variable salinities. Based on the abundance of preflexion trout larvae it appears that spawning occurs in moderate and high salinities, but no spawning occurred at low and variable salinities. Therefore, based on past studies (Collins and Finucane 1984), this study and ongoing studies (National Park Service, unpublished data), spotted seatrout do not appear to spawn in brackish waters of the western estuaries of the Everglades National Park.

Abundance and Distribution of Total Ichthyoplankton

Although not a primary objective of this study, we have analyzed 230 samples (Table 2) to gain an insight into the general ichthyoplankton abundance, distribution and diversity. Because our collections were usually dominated by early stage larvae (i.e., preflexion larvae) we can gain some understanding as to the spawning time and areas of major taxonomic groups. This should provide guidance for more in-depth studies.

Peaks in larval fish abundance appeared to occur during early spring (March 1984, April 1985); moderate abundances during the summer; and relatively low abundances during the late fall (November/December 1984) (Table 6). We are unable to explain the relatively low abundances in May, but it appeared that the early spring peak was an outcome of intensive gobiid spawning in the Shark River area (Stations 15-18) (Fig. 10 and see discussion below on specific taxa). For example, during March 1984, one sample taken at the upper Shark River (Station 17) yielded approximately 14,000 gobiid larve per 100 m^3.

Larval abundances were consistently high in the Lower Matecumbe Key area (Stations 10-12), Alligator Reef (Station 14), Cormorant Pass (Station 18) and the area near Flamingo Channel (Station 21) (Table 6). The habitats in these areas differ (Thayer et al. 1987) as do the dominant ichthyoplankton groups (Figs. 10-12). For example, gobiid larvae almost solely dominate at Cormorant Pass (Station 18). At Flamingo Channel (Station 21) gobiid larvae dominate, but there is a slightly more diverse group of dominant ichthyoplankton. At Alligator Reef (Station 14) high abundances were accompanied by a high diversity of taxonomic groups (Figs. 10-12). Relatively low abundances of ichthyoplankton were collected at Tarpon Bay (Station 22), Blue Bank (Station 26) and Snake Creek (Station 27) -- three diverse areas. A greater diversity of ichthyoplankton was collected at

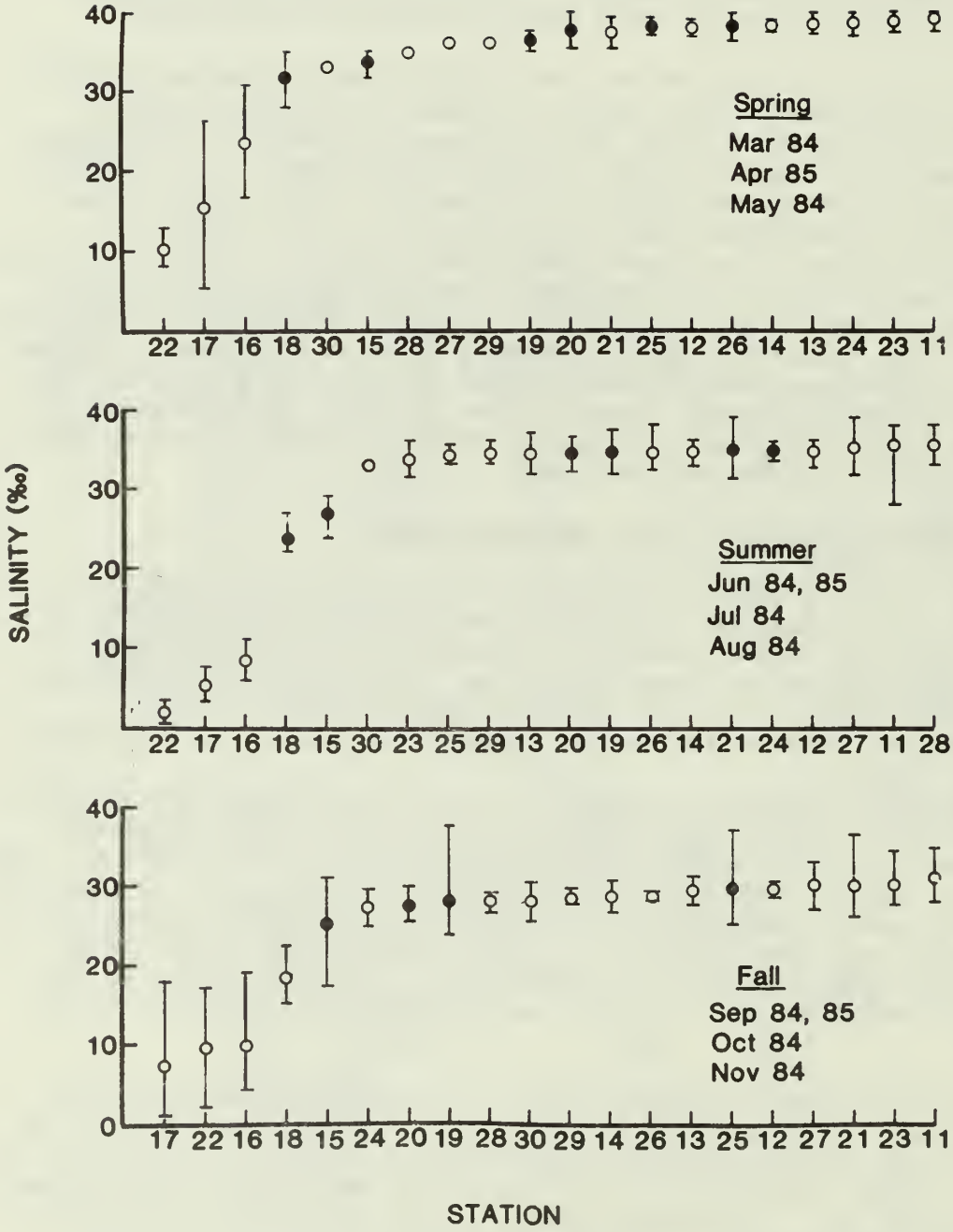

Figure 9. Mean seasonal salinities and ranges at ichthyoplankton stations. Stations are arranged by increasing salinity. Darkened circles denote those stations where preflexion larvae were collected.

Table 6. Total fish larvae abundance (number per 100 m^3) in each cruise. When replicate and day-night tows were taken, data were averaged (geometric mean).

	STATION										
DATE	11	12	13	14	15	16	17	18	19	20	21
Mar 84	1095	826	1067	157	194	1212	5368	1824	569	1089	3558
May 84	82	24	17	445	66	14	21	173	62	17	107
Jun 84	444	289	433	1061	217	328	82	2782	103	124	452
Jul 84	146	239	275	77	398	108	38	1337	155	246	823
Aug 84	82	222	83	185	208	45	283	339	129	12	260
Sep 84	397	772	589	-	80	244	392	469	88	329	27
Nov 84	98	118	204	48	40	10	29	103	163	222	103
Nov/Dec 84	53	36	115	118	23	0	10	14	20	4	54
Apr 85	676	377	866	122	239	605	22	327	90	325	347 2
Jun 85	463	83	227	225	32	50	44	386	2631	398	2612
Geo-metric Mean	223	178	234	176	103	68	80	357	148	110	295
Geometric Mean (excluding Mar 84)	187	150	197	179	96	49	50	298	127	85	224

Table 6 (Contd)

	STATION									
DATE	22	23	24	25	26	27	28	29	30	Geometric mean
Mar 84	-	-	-	-	-	-	-	-	-	976.4
May 84	0	20	35	12	0	36	92	-	-	28.5
Jun 84	11	154	27	1389	44	5	40	261	-	160.5
Jul 84	30	94	194	11	22	2	23	73	-	92.5
Aug 84	29	11	22	45	10	47	183	112	123	75.7
Sep 84	15	166	35	7	124	36	60	263	-	118.7
Nov 84	0	5	20	76	3	18	7	84	37	34.1
Nov/Dec 84	0	5	8	12	53	5	54	6	34	15.3
Apr 85	231	40	128	68	290	349	115	316	381	236.9
Jun 85	9	70	151	48	14	37	61	90	41	110.8
Geo-metric Mean	12	32	42	38	22	21	51	97	75	

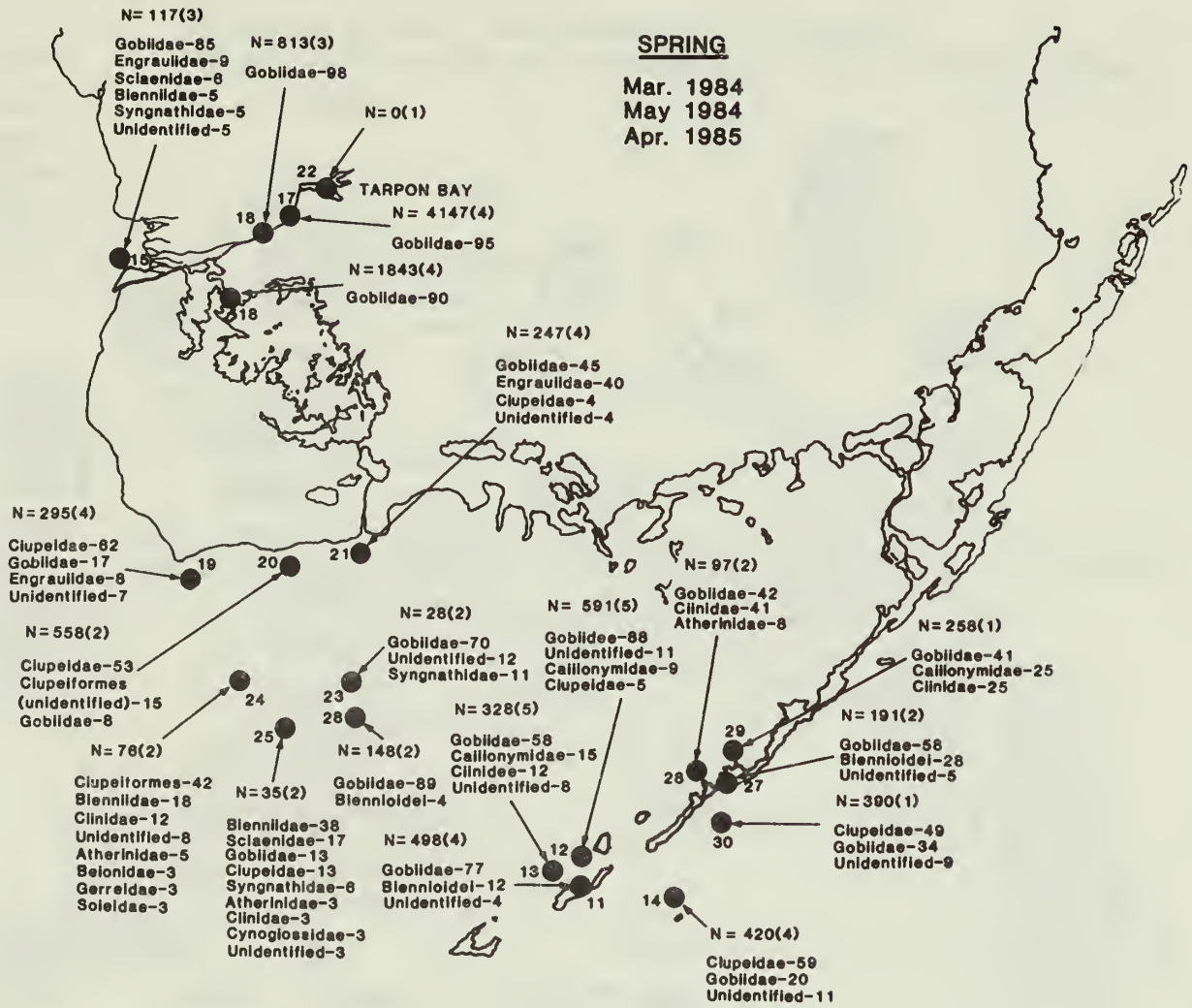

Figure 10. The dominant ichthyoplankton (≃ 90% of the total) of Florida Bay and adjacent waters during spring. N represents the mean number of larvae 100 m^{-3}, values in parentheses the number of samples, and values following the taxonomic groups the percentage of the total ichthyoplankton.

Figure 11. The dominant ichthyoplankton of Florida Bay and adjacent waters during the summer. See Figure 10 for explanation.

Figure 12. The dominant ichthyoplankton of Florida Bay and adjacent waters during the fall. See Figure 10 for explanation.

Blue Bank and Snake Creek than at Tarpon Bay. The latter was dominated by gobiids.

One of the most striking patterns we have been able to discern from our study is the dominance and ubiquitous distribution of gobiid larvae (Figs. 10-12). Gobiid larvae ranked first in abundance of 13-, 16-, and 18-out of 20 stations during the spring, summer and fall, respectively (Fig. 10-12). They dominated our collections in diverse habitats. For example, during the summer they were first in abundance at low salinity stations at Shark River (16, 17 and 22), at many northwestern Florida Bay stations (20, 21, 23 and 26), at most Florida Bay stations adjacent to the Keys (11-13, 28, 29), at Alligator Reef (14) and Whale Harbor Channel (30). At every cruise, they ranked first in abundance at eight stations, two in eastern Florida Bay (Stations 13 and 30), two in western Florida Bay (Stations 21 and 23), and four in Shark River and adjacent waters (Statons 16, 17, 18 and 22). Although we do not have the gobies separated to species, Thayer et al. (1987) and Roessler (1970) suggested that there are numerous species occurring within the Park and adjacent waters (e.g., Alligator Reef). The separation of these gobies into species is difficult as the larval stages have not been described for many of the species.

It appeared that certain larval fish types are more available to neuston tows than step-oblique tows. The Atheriniformes (Atherinidae, Belonidae and Exocoetidae) were more dominant in neuston tows (Table 7) than step-oblique tows (Figs. 10-12). Seasonally, atheriniform larvae were rarely a dominant component of the ichthoplankton collected by step-oblique tows and they were only relatively abundant at stations adjacent to the Keys (Figs. 10-12). When we compared concurrent tows (i.e., step-oblique tow followed by a neuston tow) the difference in occurrence of atheriniform larvae between neuston and step-oblique tows was dramatic (Fig. 13). Heavy melanistic and xanthic pigmentation in atheriniform larvae provides protection from ultraviolet radiation and allows this group to exploit a seemingly food rich environment (Moser 1981). These differences in catches demonstrate that neuston tows are valuable when atheriniform life histories are of interest.

We were not able to determine if water clarity affected larval vulnerability. With the exception of one station (Snake Creek -- Station 27), all stations in east Florida Bay have clear water. On the western side of Florida Bay and adjacent waters, all stations except Blue Bank (Station 26) and Man of War Channel (Station 23) had turbid waters either from the suspension of calcium carbonate mud, detritus or high tannic acid loads. We observed slightly lower abundances at Blue Bank and Man of War Channel (Stations 26 and 23, respectively), stations of high water clarity that were only sampled during daytime, than at two adjacent stations (Stations 24 and 25) where water clarity was poor but were also only sampled during daytime (Table 6).

The dominant ichthyoplankton we found was similar to that reported in a previous ichtyhyoplankton survey along the west coast estuaries of the Everglades (Collins and Finucane 1984) and adjacent areas (Biscayne Bay, Houde and Lovdal 1984). In Biscayne Bay, a relatively shallow subtropical lagoon, the most abundant family was Clupeidae, followed by Engraulidae, then by Callionymidae and Gobiidae. In our collections clupeoids were not as dominant as in Biscayne Bay, but Callionymidae larvae were among the dominant ichthyoplankton in eastern Florida Bay stations (12, 13, and 29) during certain seasons (Figs. 10-12). Like Houde and Lovdal (1984),

Table 7. Dominant ichthyoplankton collected by neuston tows.

Date	Station	Time	Total Larvae	Rank First (%)	Second (%)	Third (%)
Mar 84	15	Day	23	Gobiidae (78)	Sparidae (9) Unknown (9)	Sciaenidae (4)
	16	Day	76	Gobiidae (80)	Atherinidae (8)	Gobiesocidae (7)
	18	Day	300	Gobiidae (76)	Atherinidae (15)	Engraulidae (4)
	19	Day	189	Clupeiformes (63)	Gobiidae (12) Atherinidae (12)	Unidentified (12)
	21	Day	37	Clupeiformes (49)	Atherinidae (24)	Unidentified (14)
May 84	13	Night	53	Gobiidae (55)	Exocoetidae (13) Belonidae (13)	Atherinidae (9)
	14	Night	387	Clupeidae (76)	Unknown (15)	Gobiidae (7)
	15	Day	60	Atherinidae (57)	Gerreidae (25)	Engraulidae (8)
	18	Day	34	Atherinidae (50)	Blenniidae (44)	Gobiidae (3) Syngnathidae (3)
	19	Night	38	Exocoetidae (26)	Gobiidae (18)	Unknown (16) Gerreidae (13)
	24	Day	58	Atherinidae (47)	Clinidae (24)	Unknown (9)
	26	Day	1	Exocoetidae (100)	-	-
	28	Day	29	Atherinidae (79)	Clupeidae (21)	-
Sep 84	11	Night	9	Clinidae (56)	Atherinidae (11) Gerreidae (11) Balistidae (11) Unknown (11)	-
	12	Night	81	Callionymidae(36) Clinidae (36)	Gobiidae (16)	Clupeidae (7)
	13	Night	121	Gobiidae (49)	Clinidae (39)	Clupeidae (5)
	15	Day	9	Blenniidae (33)	Gobiidae (22) Engraulidae (22)	Atherinidae (11) Carangidae (11)

Table 7 (Contd)

Date	Station	Time	Total Larvae	Rank First (%)	Second (%)	Third (%)
Sep 84 (Contd)						
	17	Day	2	Atherinidae (2)	-	-
	18	Day	25	Gobiidae (48)	Blenniidae (40)	Clinidae (8)
	19	Day	24	Clupeidae (75)	Gobiidae (20)	Clinidae (4)
	20	Day	30	Clinidae (33)	Clupeidae (2) Engraulidae (20)	Atherinidae (17)
	21	Day	18	Atherinidae (72)	Gobiidae (22)	Engraulidae (6)
	22	Day	2	Atherinidae (100)	-	-
	23	Day	6	Clinidae (50)	Atherinidae (33)	Gobiidae (17)
	24	Day	14	Gobiidae (29) Clinidae (29)	Blenniidae (21)	Atherinidae (7) Gerreidae (7) Syngnathidae (7)
	25	Day	6	Atherinidae (33)	Callionymidae (17) Clupeidae (17) Gobiidae (17) Microdesmidae (17)	-
	26	Day	1	Gobiidae (100)	-	-
	27	Day	11	Gobiidae (55)	Clinidae (27)	Gerreidae (18)
		Night	16	Gobiidae (81)	Atherinidae (12)	Unknown (6)
	28	Night	23	Gerreidae (39)	Clinidae (30)	Cynoglossidae (13)
	29	Night	28	Gobiidae (43)	Callionymidae (25)	Clinidae (21)
Nov/ Dec	84 19	Night	8	Gobiidae (50)	Balistidae (25)	Blenniidae (12) Mugilidae (12)

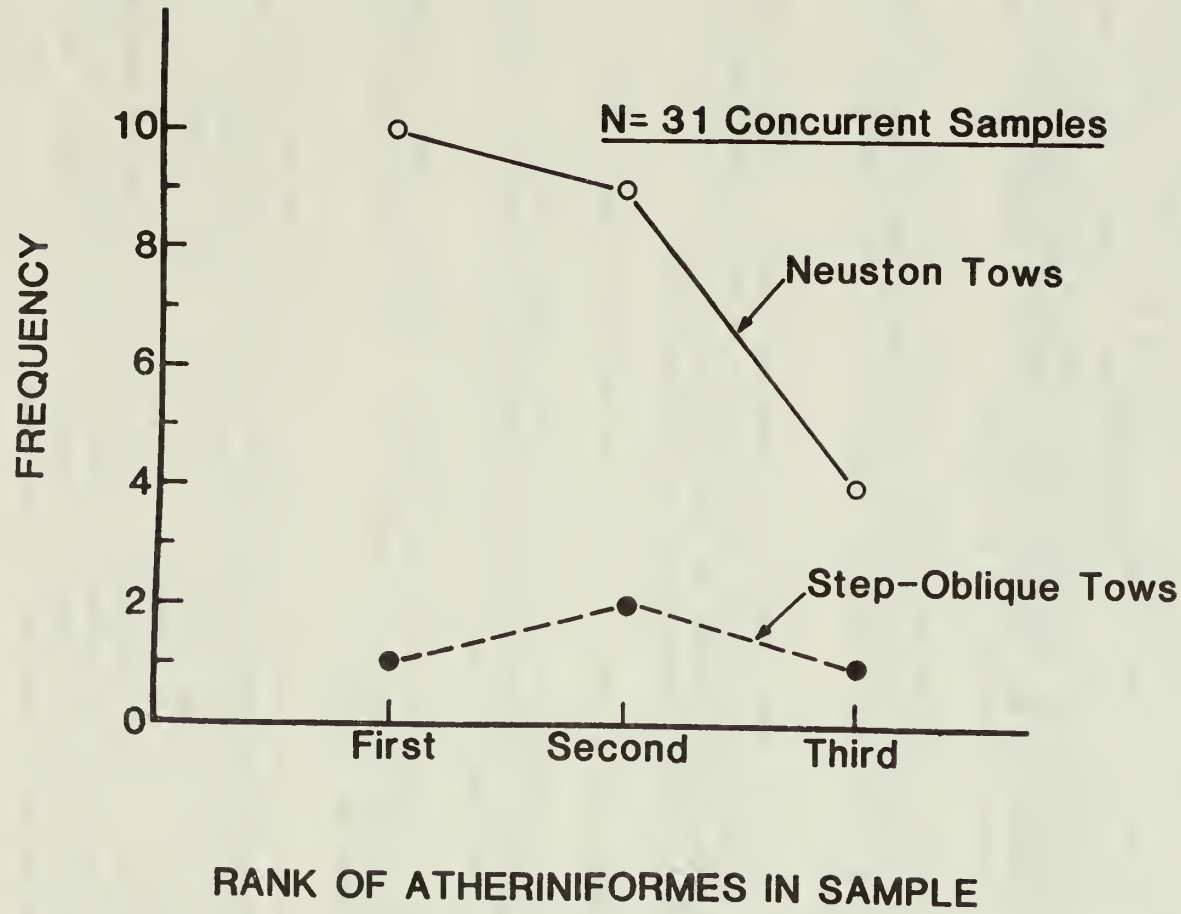

Figure 13. The rank of atheriniform larvae in samples in relation to tow type.

Collins and Finucane (1984) reported that clupeids and engraulids dominated their collections, but clupeids were rarely caught at estuarine stations. A paucity of ichthyoplankton, both in terms of abundance and diversity, was collected in the estuarine zone compared to the coastal marine zone. They concluded that low and variable salinity was one of the several environmental factors that limited the abundance of larvae in the estuarine zone. At our estuarine stations (Stations 15, 16, 17, 18 and 22), diversity was also low (Figs. 10-12) but, with the exception of Tarpon Bay, abundances were not unusually low. Tarpon Bay had variable and lowest salinities (Fig. 9) and the overall abundance was the lowest we observed (Table 6).

CONCLUSIONS

1. Spotted seatrout spawn in intermediate to high salinities of western Florida Bay and adjacent waters, but did not appear to spawn in brackish habitats in this area.

2. Spotted seatrout larvae were never collected in the Keys. The central and eastern region of Florida Bay and adjacent waters should be sampled to provide additional insight into trout spawning in Park waters.

3. Spotted seatrout have a protracted spawning season. Spawning appears minimal during late fall and winter, peaks in mid-to-late spring, continues during the summer at moderate levels, then declines with the onset of declining temperatures and photoperiods.

4. Gray snapper, snook and red drum spawn outside of Park waters.

5. Gray snapper larvae can not be positively identified in ichthyoplankton samples because of possible confusion with related species that have not been adequately described.

6. Based on the location, size and timing of snapper larvae it appears that they spawn offshore in summer and at least some migrate into Florida Bay as juveniles.

7. The lack of larval snook and red drum in our samples does not indicate they are absent from the area. Adults spawn outside the Park, thus the larval supply is susceptible to considerable mortality prior to migrating into the Park. They are less vulnerable to the gear because they are relatively well developed, and they may not be available to standard ichthyoplankton gear due to preference for the bottom, crevices or channel edges. Our lack of intensive nighttime sampling, especially during October, may also have accounted for our lack of red drum.

8. Step-oblique tows are appropriate for sampling preflexion larvae. Unfortunately, the life stage which is more likely to provide critical life history information in the Park is the unstudied postflexion/early juvenile period. Studying that life stage would probably be the most cost efficient way to increase our knowledge

of the life history of these species, but it may require development of different gear.

9. Goby larvae dominated most larval collections especially in northwestern Florida Bay and the Shark River area.

ACKNOWLEDGMENTS

We thank the staff at Everglades National Park for their cooperation, background information and hospitality, and Joanne Schultz, Gulf Coast Labortory, for verifying the identification of many of our trout larvae. The U.S.-Polish Plankton Sorting and Identification Center ably assisted in the sorting of plankton. We are grateful to the following NMFS, Southeast Fishery Center staff for their laboratory and field assistance: Don Field, Mike LaCroix, Kenyon Lindeman, Patti McElhaney, Keith Rittmaster, Jose Rivera, Vicky Thayer and Stan Warlen.

LITERATURE CITED

Collins, L.A., and J.H. Finucane. 1984. Ichthyoplankton survey of the estuarine and inshore waters of the Florida Everglades, May 1971 to February 1972. NOAA Tech. Rep. NMFS 6, 75 p.

Croker, R.A. 1960. A contribution to the life history of the gray (mangrove) snapper, Lutjanus griseus (Linnaeus). M.S. thesis. Univ. of Miami, Coral Gables, FL.

Elliot, J.M. 1977. Some methods for the statistical analysis of samples of benthic invertebrates (2nd edition). Freshwater Biol. Assoc. Sci. Publ. No. 25, 160 p.

Fable, W.A., Jr., T.D. Williams, and C.R. Arnold. 1978. Description of reared eggs and young larvae of the spotted seatrout, Cynoscion nebulosus. Fish. Bull., U.S. 76: 65-71.

Fore, P.L., and T.W. Schmidt. 1973. Biology of juvenile and adult snook, Centropomus undecimalis, in the Ten Thousand Islands, Florida, Chap. 16. In Ecosystem analyses of the Big Cypress Swamp and Estuaries. U.S. Environmental Protection Agency, Surveillance and Analyses Div., Athens, GA., 188 p.

Gilmore, R.G., C.J. Donahue, and D.W. Cooke. 1983. Observations on the distribution and biology of east-central Florida populations of the common snook, Centropomus undecimalis (Bloch). Florida Sci. 46: 313-336.

Holt, J., A.B. Johnson, C.R. Arnold, W.A. Fable, Jr., and T.D. Williams. 1981. Description of eggs and larvae of laboratory reared red drum, Sciaenops ocellata. Copeia 1981(4): 751-756.

Houde, E.D., and N. Chitty. 1976. Seasonal abundance and distribution of zooplankton, fish eggs and fish larva in the eastern Gulf of Mexico, 1972-74. U.S. Dept. Commer., NOAA Tech. Rep. NMFS SSRF-701, 18 p.

Houde, E.D., and J.A. Lovdal. 1984. Seasonality of occurrence, foods and food preferences of ichtyhyoplankton in Biscayne Bay, Florida. Estuarine, Coast., Shelf Sci. 18: 403-419.

Jannke, T. 1971. Abundance of young sciaenid fishes in Everglades National Park, Florida in relation to season and other variables. Univ. Miami Sea Grant Tech. Bull. 11:

Laroche, W.A. 1977. Description of larval and early juvenile vermillion snapper, Rhomboplites aurorubens. Fish. Bull. U.S. 75:547-554.

Lau, S.R., and P.L. Shafland. 1982. Larval development of snook, Centropomus undecimalis (Pisces: Centropomidae). Copeia 1982(3): 618-627.

Moser, H.G. 1981. Morphological and functional aspects of marine fish larvae, p. 88-131. In (R. Lasker, ed.) Marine fish larvae. Washington Sea Grant Program.

Peters, K.M., and R.H. McMichael, Jr. 1987. Early life history of the red drum, Sciaenops ocellatus (Pisces: Sciaenidae), in Tampa Bay, Florida. Estuaries 10:92-107.

Powles, H., and V.W. Stender. 1978. Taxonomic data on the early life history stages of Sciaenidae of the South Atlantic Bight of the United States. South Carolina Mar. Res. Ctr., Tech. Rep. 31, 64 p.

Randall, J.E. 1983. Caribbean reef fishes. T.F.H. Publ., N.J.

Richards, W.J., and V.P. Saksena. 1980. Description of larvae and early juveniles of laboratory-reared gray snapper, Lutjanus griseus (Linnaeus) (Pisces, Lutjanidae). Bull. Mar. Sci. 30: 515-521.

Roessler, M.A. 1970. Checklist of fishes in Buttonwood Canal, Everglades National Park, Florida, and observations on the seasonal occurrence and life histories of selected species. Bull. Mar. Sci. 20: 860-893.

Rutherford, E., E. Thue, and D. Buker. 1982. Population characteristics, food habits and spawning activity of spotted seatrout, Cynoscion nebulosus, in Everglades National Park, Florida. South Florida Research Center Report T-668, 48 p.

_____. 1983. Population structure, food habits, and spawning activity of gray snapper, Lutjanus griseus, in Everglades National Park. South Florida Research Center Report SFRC-83/02, 41 p.

Sokal, R.R., and F.J. Rohlf. 1981. Biometry (2nd edition). W.H. Freeman Co., San Francisco, 859 p.

Starck, W.A., II. 1964. A contribution to the biology of gray snapper, Lutjanus griseus (Linnaeus), in the vicinity of lower Matecumbe Key, Florida. Ph.D. dissertation. Univ. of Miami, Coral Gables, FL.

Starck, W.A., II. 1970. Biology of the gray snapper, Lutjanus griseus (Linnaeus), in the Florida Keys, p. 11-150. In W.A. Stark, II and R.E. Schroeder. Investigations on the gray snapper, Lutjanus griseus. Stud. Trop. Oceanogr. Univ. Miami 10.

Thayer, G.W., W.F. Hettler, Jr., A.J. Chester, D.R. Colby, and P.J. McElhaney. 1987. Distribution and abundance of fish communities among selected estuarine and marine habitats in Everglades National Park. South Florida Research Center Report SERC-87/02, 166 p.

Thue, E.G., E.S. Rutherford, D.G. Buker. 1982. Age, growth and mortality of the common snook, Centropomus undecimalis (Bloch), in the Everglades National Park, Florida. South Florida Research Center Report T-683.

APPENDIX A

Design and Operation of a Bongo Net Deployment System for Small Craft

ABSTRACT

Bongo nets towed at low speeds have proven to be successful in ichthyoplankton surveys. This gear, however, is usually towed from hydrographic winches mounted on large research vessels. To allow bongo net tows to be made in shallow water, a low cost all-metal mast and boom arrangement was designed tfor deployment of such gear from an open, outboard motor boat. The entire device is portable, detachable and can be used in waters as shallow as 1.5 m.

INTRODUCTION

In January 1984, the Beaufort Laboratory, Southeast Fisheries Center, National Marine Fisheries Service, began a survey of the distribution and abundance of larval fish entering and utilizing the waters of the Everglades National Park, Florida. The waters to be surveyed were mostly shallow (1-3 m), confined, or otherwise unaccessible to craft large enough to mount and deploy a standard 60-cm bongo net.

The nature of the environment, the need for ichthyoplankton tows at various levels of the water column, and the need to cover many stations each day during the sampling period, required devising a method of deploying bongo nets from a fast, highly maneuverable, shallow draft craft. Further, the nets needed to be towed from the side of the vessel to avoid sampling in the propeller wake.

A number of small-boat mounted sampling systems have been described (Dovel 1964, Sevedberg 1967, Netsch et al. 1971), but none address the problem of towing 60-cm bongo nets, which have become a standard larval fish sampling gear (Posgay et al. 1968; Houde et al. 1979).

Here we describe the system we developed for safe and successful deployment of 60 cm bongo nets from a small craft.

DESCRIPTION, ASSEMBLY AND OPERATION

The deployment device (Fig. 1) operates much like a cargo-handling mast and boom assembly. The device was fabricated from galvanized steel pipe by a local machine shop at a cost of $400. All of the ancillary hardware-stays, lines, etc., were available in local hardware or boating supply stores.

There are four basic parts to the device (Fig. 2): an upright mast, with an attached "Pow-R-Winch" Model 412C winch; a mast mounting base; a horizontal boom with swivel block, forestay, safety chains, and a "snap back" preventer spar; and a short bar welded to the boom to provide leverage when swinging the gear in or outboard. The winch is powered by four 12 Volt marine batteries wired in parallel. An alternator attached to the boat's outboad motor recharges the batteries as the boat runs from station to station.

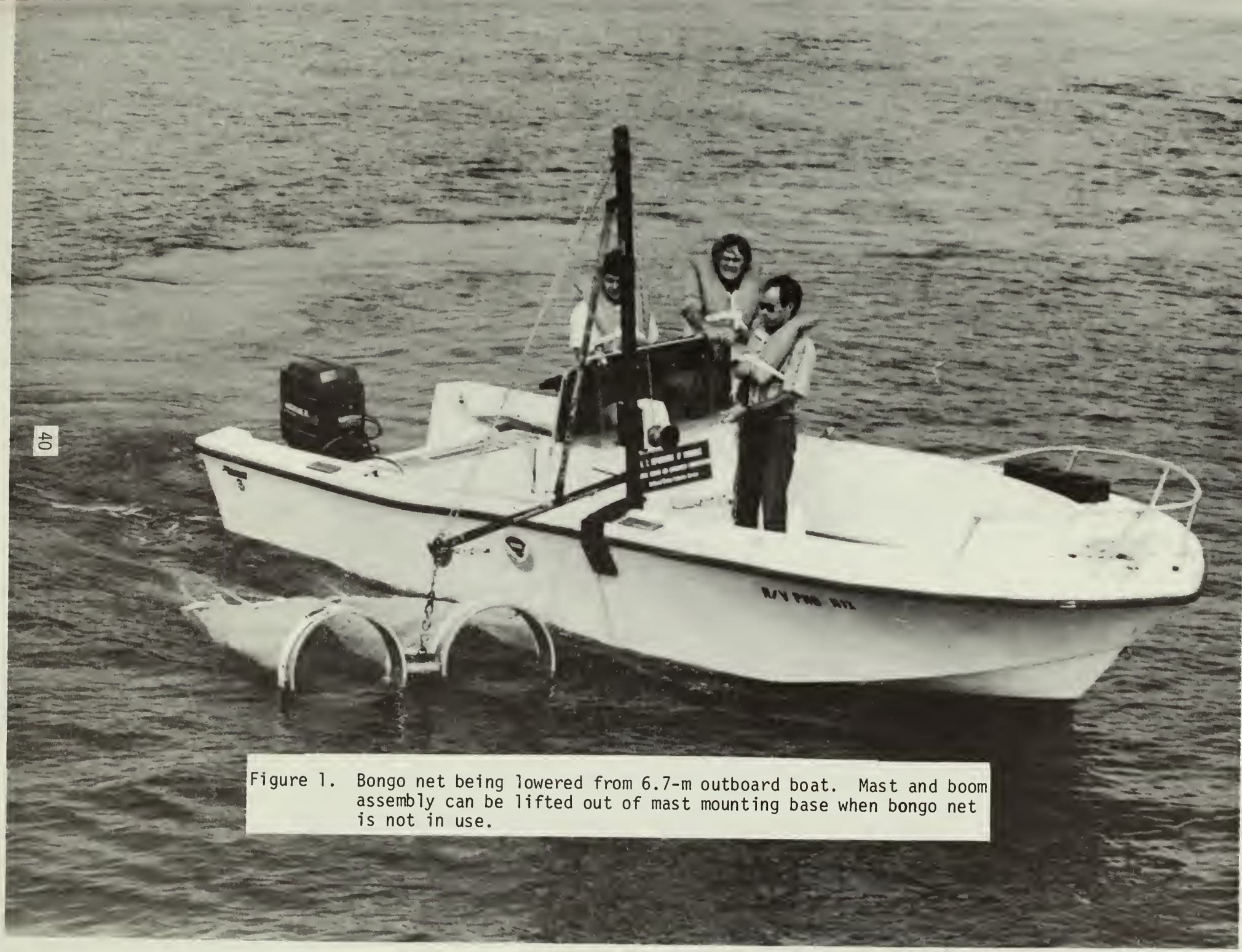

Figure 1. Bongo net being lowered from 6.7-m outboard boat. Mast and boom assembly can be lifted out of mast mounting base when bongo net is not in use.

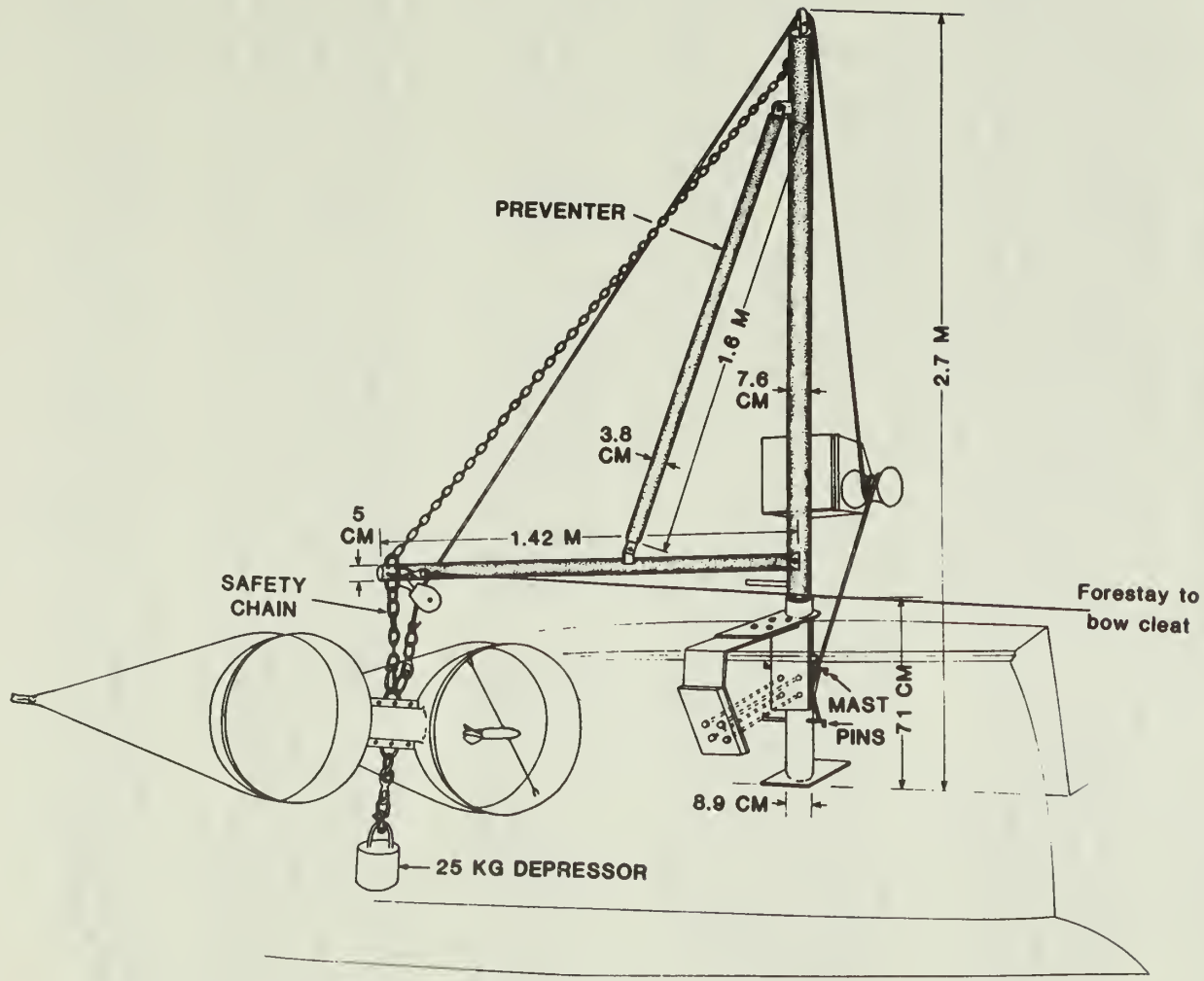

Figure 2. Bongo net deployment, mast, boom and winch assembly. Safety chain is detached before net is deployed. Preventor bar is unpinned at lower end and safety chain is attached before net is raised out of water and brought aboard. Winch shown was later replaced with a self-tailing automatic windlass. Mast assembly was mounted 4 meters from the bow on the boat's starboard side.

To assemble the device, we first fit the upright mast into the base. This base (Fig. 3) is permanently mounted to the hull, 3.6 m forward of the transom by four lag bolts and a "sandwich" type bracket, which is fitted over the starboard gunwale and through-bolted for maximum rigidity. Positioning the device in the forward half of the boat allows the use of the greater deck space there and provides for better weight distributionin our craft.

Assembly continues by attaching the boom at its pivot point on the mast by using a slightly undersized bolt which allows free up and down motion of the boom. Finally, the preventer spar, support chain, and forestay are attached. This operation completes the assembly of the deployment device.

Before getting underway, the bongo nets are attached to the device. This is done with 11-mm dacron double braided tow line, shackles and swivels. The tow line is threaded through the swivel block on the boom and a sheave atop the mast. After this, a small safety chain is connected to the bongo net frame. Since it is impractical to travel with the gear dangling outboard, the entire assembly can be swung inboard by use of the attached bar. It can then be secured while moving between stations.

When on station, the boat is slowed to towing speed 0.5 - 1.0 m/sec and the gear is lifted with the winch. It is then swung outboard and lowered to the water. We then pin the "snapback" preventer spar into position, release the safety chain, and lower the nets to the desired sampling depth. Once in the water, the gear is fished in a right-hand circle 50-100 m in diameter. This prevents entanglement of the nets or towline in the propeller. While towing, the forestay prevents the boom from bending aft as a result of drag. Additionally, the mast is pinned to its mounting base to likewise prevent its turning due to the forces involved.

To retrieve the gear, the deployment process is reversed. The nets are brought to the surface by means of the winch. The boat is then stopped, the safety chain re-attached, and the "snap-back" preventer detached. The nets are then hauled onboard, again using the winch, for wash down and sample removal.

For safe operation, the design must include the small safety chain between the boom and the bongo net frame and the "snap-back" preventer. It was found that while raising or lowering the nets without the safety chain, the boom tended to "ride" the towline when the angle between the mast and boom was less than 45°. This caused the bongo net frame to drop dangerously several feet as the boom rose to the vertical position. The safety chain, attached at all times when the nets are not in the water, prevents this.

Additionally, we found that, while fishing, the boom tended to "snapback" to vertical due to vector forces being applied. A heavier boom might have prevented this effect but, in order to save weight, the "snap-back" preventer was incorporated into the design.

Figure 3. Mast mounting base is permanently bolted to starboard side of hull. Mast is shown inserted and pinned in fishing position.

DISCUSSION

The gear is being successfully used in estuarine areas of both Florida and North Carolina. Experience has shown that a complete 3-minute oblique tow, from launch to recovery, in 2 m of water can be accomplished in less than 6 minutes. Minimum working depth is 1.5 m and maximum depth is restricted only by length of line onboard and battery power available to retrieve the nets from depth. The gear can easily and safely be deployed by a crew of three - two handling the gear and one handling the boat.

Since small craft can enter waters not accessible by most vessels which currently mount bongo net and can exceed 45 km/hr while traveling between stations, a much wider area is now available for sampling with bongo nets.

ACKNOWLEDGMENTS

This work was funded by the U.S. Department of Interior, National Park Service and the National Marine Fisheries Service, NOAA, under an interagency agreement. Use of trade names does not imply endorsement by the National Marine Fisheries Service, NOAA. We also thank the members of the staff of the U.S. Naval Academy Hydromechanics Lab who provided valuable advice during the design of this gear.

REFERENCES

Dovel, W.L. 1964. An approach to sampling estuarine macroplankton. Chesapeake Sci. 5: 77-90.

Houde, E.D., Leak, J.C., Dowd, C.E., Berkeley, S.A., and Richards, W.J. 1979. Ichthyoplankton abundance and diversity in the eastern Gulf of Mexico. Final Report to Bureau of Land Management, Contract No. AA550-CT7-28.

Netsch, N.F., A. Houser, and L.E. Vogele. 1971. Sampling gear for larval reservoir fishes. Prog. Fish-Cult. 33(3): 175-179.

Posgay, J.A., R.R. Marak, and R.C. Hennemuth. 1968. Development and tests of new zooplankton samples. Int. Comm. Northwest Atl. Fish. Res. Doc. 85.

Swedberg, D. 1967. A trawling device for small boats. Prog. Fish-Cult. 29(4): 241-242.